12.3 Dimensional drawings

In this chapter you can find the dimensions of the geared motors.

There is a dimensional drawing for every possible shaft/housing design, each with the tables for gear unit dimensions, motor dimensions and geared motor dimensions.

Dimensions can exceed the specifications of ISO 2768-mK due to casting tolerances or accumulation of individual tolerances.

We reserve the right to make dimensional changes due to ongoing technical development.

You can download 3D models of our standard drives at http://configurator.stoeber.de.

Combination options and the dimensions of forced ventilated geared motors can also be found at http://configurator.stoeber.de.

12.3.1 F shaft design (flange shaft)

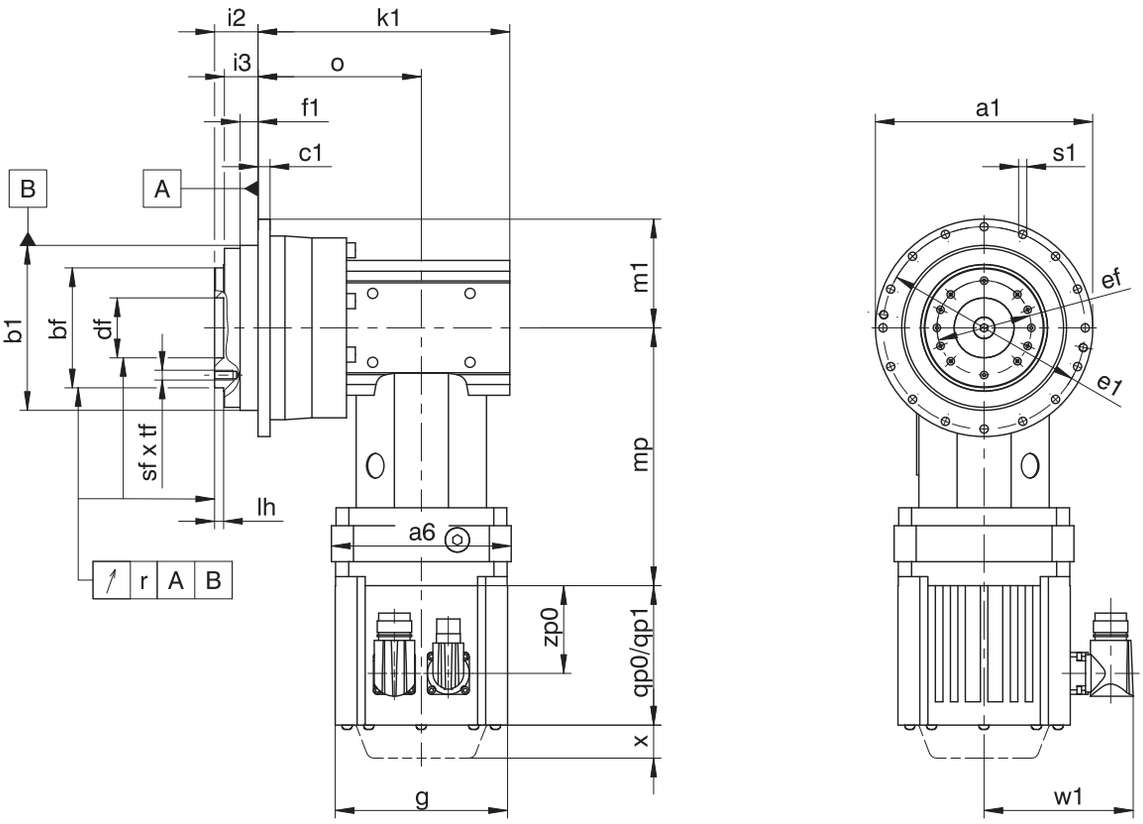

PH3 | PH4

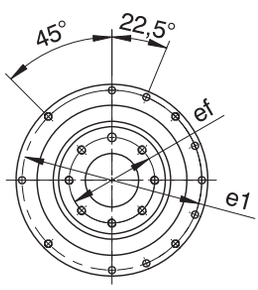

PH5

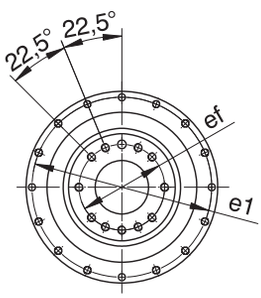

PH7/PH8

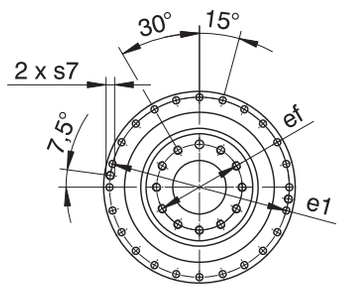

qp0	Applies to motors without brake.	qp1	Applies to motors with brake.
x	Applies to encoders using an optical measuring concept.	w1	For variation for One Cable Solution (OCS), see the chapter [▸ 17.4]

Dimensions of gear units

Type	Øa1	Øb1	Øbf	c1	Ødf	Øe1	Øef	f1	i2	i3	k1	lh	m1	o	r	Øs1	s7	sf	tf
PH331_KX301_	86_{h7}	64_{h7}	40_{h7}	4	20.0^{H6}	79	32	7	19.5	16.5	113.5	4	43.0	73.5	0.020	4.5	–	M5	7
PH332_KX301_	86_{h7}	64_{h7}	40_{h7}	4	20.0^{H6}	79	32	7	19.5	16.5	147.0	4	43.0	107.0	0.020	4.5	–	M5	7
PH431_KX401_	118_{h7}	90_{h7}	63_{h7}	7	31.5^{H6}	109	50	10	30.0	24.0	139.0	6	59.0	89.0	0.020	5.5	–	M6	11
PH432_KX301_	118_{h7}	90_{h7}	63_{h7}	7	31.5^{H6}	109	50	10	30.0	24.0	161.5	6	59.0	121.5	0.020	5.5	–	M6	11
PH531_KX501_	145_{h7}	110_{h7}	80_{h7}	8	40.0^{H6}	135	63	12	29.0	23.0	168.0	6	72.5	109.0	0.020	5.5	–	M6	11
PH532_KX401_	145_{h7}	110_{h7}	80_{h7}	8	40.0^{H6}	135	63	12	29.0	23.0	188.5	6	72.5	138.5	0.020	5.5	–	M6	11
PH731_KX701_	179_{h7}	140_{h7}	100_{h7}	10	50.0^{H6}	168	80	12	38.0	32.0	203.0	6	89.5	129.0	0.025	6.6	–	M8	14
PH732_KX501_	179_{h7}	140_{h7}	100_{h7}	10	50.0^{H6}	168	80	12	38.0	32.0	226.0	6	89.5	167.0	0.025	6.6	–	M8	14
PH831_KX701_	247_{h7}	200_{h7}	160_{h7}	12	80.0^{H6}	233	125	15	50.0	42.0	235.5	8	123.5	161.5	0.030	9.0	M10	M10	18
PH832_KX701_	247_{h7}	200_{h7}	160_{h7}	12	80.0^{H6}	233	125	15	50.0	42.0	293.0	8	123.5	219.0	0.030	9.0	M10	M10	18

Dimensions of motors

Type	□g	qp0	qp1	w1	x	zp0
EZ301U	72	90	130.0	55.5	21	54.5
EZ302U	72	112	152.0	55.5	21	76.5
EZ303U	72	134	174.0	55.5	21	98.5
EZ401U	98	98	146.5	91.0	22	56.0
EZ402U	98	123	171.5	91.0	22	81.0
EZ404U	98	173	221.5	91.0	22	131.0
EZ501U	115	93	147.5	100.0	22	58.5
EZ502U	115	118	172.5	100.0	22	83.5
EZ503U	115	143	197.5	100.0	22	108.5
EZ505U	115	193	247.5	100.0	22	158.5
EZ701U	145	102	161.0	115.0	22	64.0
EZ702U	145	127	186.0	115.0	22	89.0
EZ703U	145	152	211.0	115.0	22	114.0
EZ705U	145	207	266.0	134.0	22	165.0
EZ802U	190	197	274.0	156.5	22	143.0

Dimensions of geared motors

Type	EZ3		EZ4		EZ5		EZ7		EZ8	
	□a6	mp	□a6	mp	□a6	mp	□a6	mp	□a6	mp
PH331_KX301_	75	139.5	100	134.0	–	–	–	–	–	–
PH332_KX301_	75	139.5	–	–	–	–	–	–	–	–
PH431_KX401_	100	151.0	100	145.5	115	150.0	140	153.0	–	–
PH432_KX301_	75	139.5	100	134.0	–	–	–	–	–	–
PH531_KX501_	–	–	120	176.5	120	172.0	140	183.0	–	–
PH532_KX401_	100	151.0	100	145.5	115	150.0	140	153.0	–	–
PH731_KX701_	–	–	–	–	150	214.5	150	217.5	190	242.5
PH732_KX501_	–	–	120	176.5	120	172.0	140	183.0	–	–
PH831_KX701_	–	–	–	–	150	214.5	150	217.5	190	242.5
PH832_KX701_	–	–	–	–	150	214.5	150	217.5	190	242.5

12.4 Type designation

In this chapter, you can find an explanation of the type designation with the associated options.

Additional ordering information not included in the type designation can be found at the end of the chapter.

Sample code

PH	7	3	1	S	F	S	S	0050	KX701VF	0010	MF	EZ703U

Explanation

Code	Designation	Design
PH	Type	Planetary gear unit
7	Size	7 (example)
3	Generation	Generation 3
1 2	Stages	Single-stage Two-stage
S	Housing	Standard
F	Shaft	Flange shaft
S V	Bearing	Standard bearing Reinforced bearing (PH3 – PH5)
S R	Backlash	Standard Reduced
0050	Transmission ratio of output (i x 10)	i = 5 (example)
KX701 **VF**	Input	KX7 right-angle geared motor (example)
0010	Transmission ratio of input (i x 10)	i = 1 (example)
MF	Motor adapter	Motor adapter with FlexiAdapt coupling
EZ703U	Motor	EZ synchronous servo motor

In order to complete the type designation, also specify:

- A detailed type designation of the motor, see the chapter [▸ 17]
- The mounting position, see the chapter [▸ 12.5.3]
- Radial shaft seal rings at the output made of NBR or FKM, see the chapter [▸ 12.6.3]
- The position of the plug connectors, see the chapter [▸ 12.5.5]
- For reverse operation of the output shaft from ± 20° to ± 90° and horizontal installation, see the chapter Reverse operation

12.4.1 Nameplate

An example geared motor nameplate is explained in the figure below.

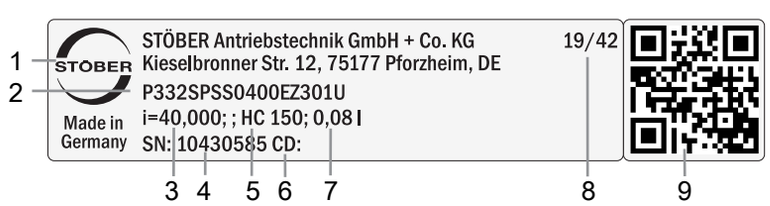

Code	Designation
1	Name of manufacturer
2	Type designation
3	Gear ratio of the gear unit
4	Serial number of the gear unit
5	Lubricant specification
6	Customer-specific data
7	Lubricant fill volume
8	Date of manufacture (year/calendar week)
9	QR code (link to product information)

12.4.1.1 Supporting documents

You can view or download supporting documents for the product by reading off the serial number on the nameplate of the product and entering it at the following address online:
https://id.stober.com

Alternatively, you can use a suitable mobile device to scan in the QR code on the nameplate of the product in order to be linked to the supporting documents.

12.5 Product description

12.5.1 Input options

EZ synchronous servo motor

http://www.stoeber.de/en/PHKXEZ

12.5.2 Installation conditions

The torque and force values listed in this catalog are valid under the following conditions:

- When the flange shaft and gear housing are fastened on the machine side using screws of strength class 12.9
- When the gear housings are adjusted at pilot øb1. The machine-side fit must be H7.
- When the flange shaft is adjusted using the connecting element at pilot øbf or ødf

12.5.3 Mounting positions

The following table shows the standard mounting positions.

The numbers identify the gear unit sides. The mounting position is defined by the gear side facing downwards.

EL1	EL2	EL3
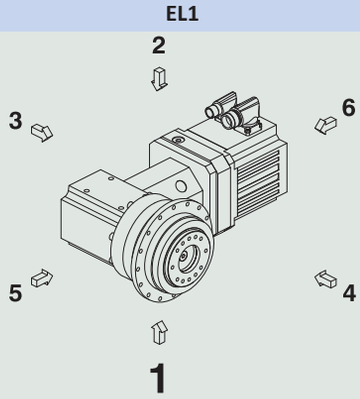	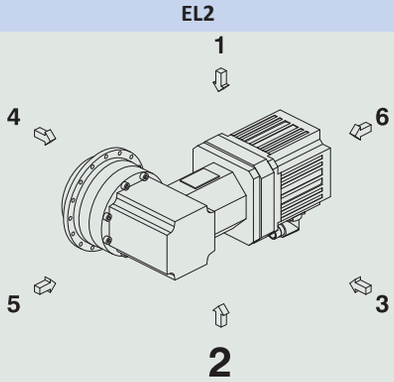	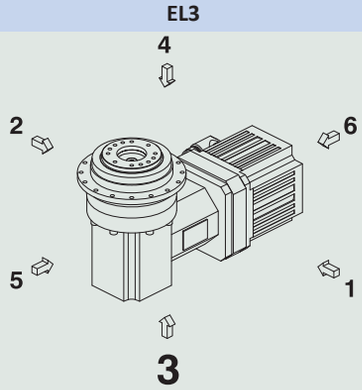

EL4	EL5	EL6
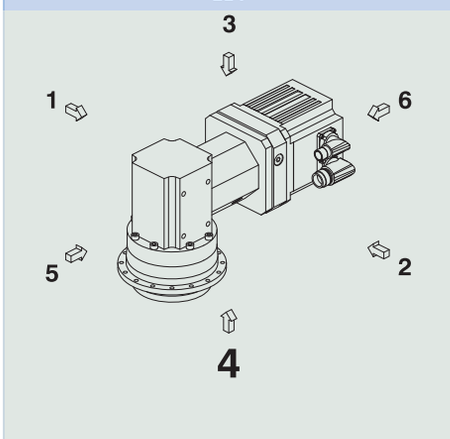	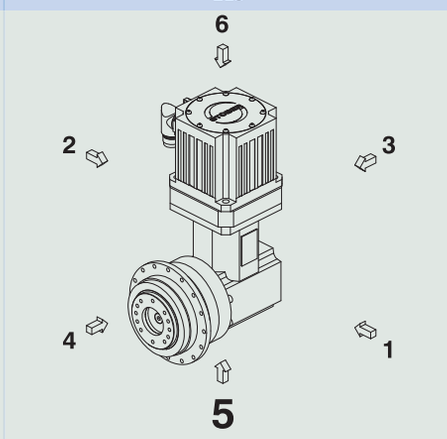	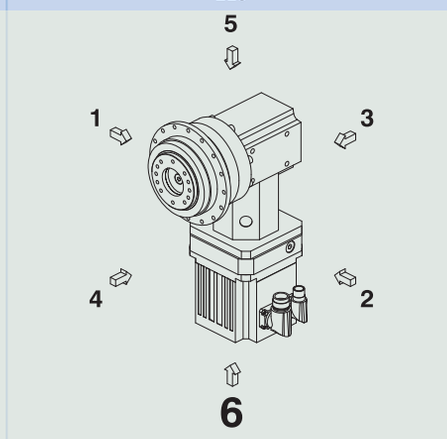

Since the lubricant filling volume of the gear unit depends on the mounting position, the mounting position must be specified when ordering.

12.5.4 Lubricants

STOBER fills the gear units with the amount and type of lubricant specified on the nameplate. The filling volume and the structure of the gear units depend on the mounting position.

Only install the gear units in the intended mounting position! Reposition the gear units only after consulting STOBER. Otherwise, STOBER assumes no liability for the gear units.

You will receive lubricants for use in the food industry upon request.

12.5.5 Position of the plug connectors

Mounting position EL1 Plug connector in 270° position (standard)	Mounting position EL4 Plug connector in 270° position (standard)
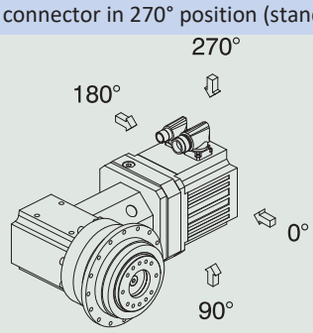	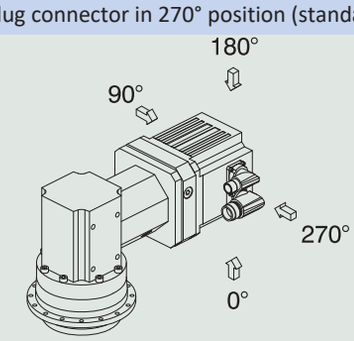

Indicate variations for your geared motor in the purchase order.

Note that the plug connector position rotates along with the geared motor if the geared motor is in another mounting position.

12.5.6 Other product features

Feature	Value
Max. permitted gear unit temperature (on the surface of the gear unit)	≤ 90 °C
Paint	Black RAL 9005
Explosion-proof design in accordance with (ATEX) Directive 2014/34/EU (optional)	Not available
Efficiency:	
η_{get} two-stage	95%
η_{get} three-stage	92%
Protection class:[1]	
Gear unit	IP65
Motor	IP56, optionally IP66

[1] Observe the protection class of all the components.

12.5.7 Direction of rotation

PH3KX_ – PH5KX_	PH7KX_ – PH8KX_
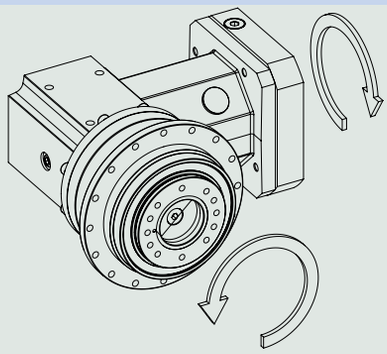	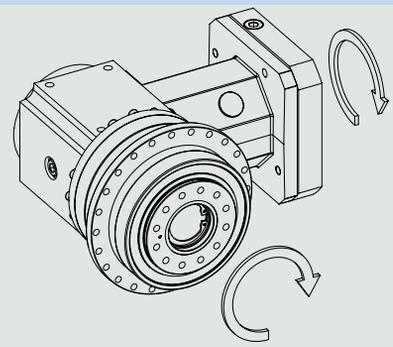

The pictures show mounting position EL1.

12.6 Project configuration

Project your drives using our SERVOsoft designing software. Download SERVOsoft for free at https://www.stoeber.de/en/ServoSoft.

Observe the limit conditions in this chapter to ensure a safe design for your drives.

An explanation of the formula symbols can be found in Chapter [▸ 23.1].

The formula symbols for values actually present in the application are marked with *.

12.6.1 Calculation of the operating point

Check the following conditions for operating points other than the nominal point M_{2N} specified in the selection tables.

For mounting positions EL1, EL2, EL5, EL6:

$$n_{1m*} \leq \frac{n_{1maxDBEL1,2,5,6}}{fB_T}$$

For mounting positions EL3, EL4:

$$n_{1m*} \leq \frac{n_{1maxDBEL3,4}}{fB_T}$$

For all mounting positions:

$$n_{1max*} \leq \frac{n_{1max\,ZB}}{fB_T}$$

$$M_{2eff*} \leq M_{2th}$$

$$M_{2acc*} \leq \frac{M_{2acc}}{fB_{ZB}}$$

$$M_{2NOT*} \leq M_{2NOT}$$

$$M_{2eq*} \leq M_{2N} \cdot \frac{S}{fB_{op} \cdot fB_t}$$

Refer to the selection tables for the values for $n_{1maxDBEL1,2,5,6}$ $n_{1maxDBEL3,4}$, n_{1maxZB}, M_{2acc} (M_{2accHT} for reduced backlash), M_{2NOT}, M_{2N} and S.

The values for fB_T, fB_{op}, fB_t and fB_{ZB} can be found in the corresponding tables in this chapter.

Calculate the thermal limit torque M_{2th} for a duty cycle > 50%.

Example of cyclic operation

The following calculations are based on a representation of the power taken from the output based in accordance with the following example:

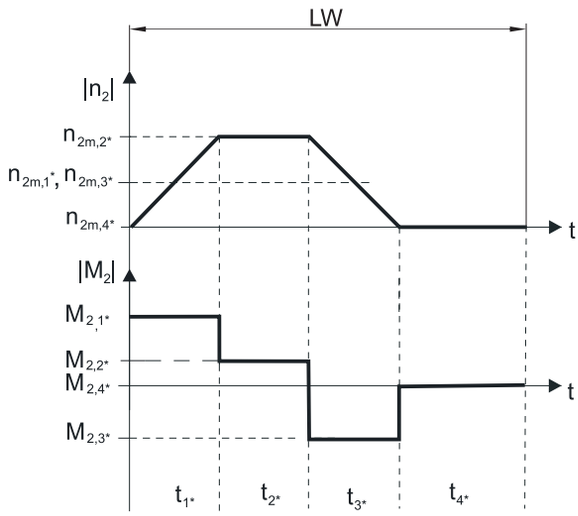

Calculation of the actual average input speed

$$n_{1m*} = n_{2m*} \cdot i$$

$$n_{2m*} = \frac{|n_{2m,1*}| \cdot t_{1*} + \ldots + |n_{2m,n*}| \cdot t_{n*}}{t_{1*} + \ldots + t_{n*}}$$

If $t_{1*} + \ldots + t_{3*} \geq 6$ min, calculate n_{2m*} without the rest phase t_{4*}.

The values for the ratio i can be found in the selection tables.

Calculation of the actual effective torque

$$M_{2eff*} = \sqrt{\frac{t_{1*} \cdot M_{2,1*}^{2} + \ldots + t_{n*} \cdot M_{2,n*}^{2}}{t_{1*} + \ldots + t_{n*}}}$$

Calculation of the actual equivalent torque

$$M_{2eq*} = \sqrt[3]{\frac{|n_{2m,1*}| \cdot t_{1*} \cdot |M_{2,1*}^{3}| + \ldots + |n_{2m,n*}| \cdot t_{n*} \cdot |M_{2,n*}^{3}|}{|n_{2m,1*}| \cdot t_{1*} + \ldots + |n_{2m,n*}| \cdot t_{n*}}}$$

Calculation of the thermal limit torque

Calculate the thermal limit torque M_{2th} for a duty cycle $ED_{10} > 50\%$ and the actual average input speed n_{1m*}. (At $K_{mot,th} \leq 0$ you must reduce the average input speed n_{1m*} accordingly or select another geared motor size.)

$$M_{2th} = M_{op} \cdot i \cdot K_{mot,th}$$

$$K_{mot,th} = 0{,}93 - \frac{a_{th}}{1000} \cdot athEL \cdot fB_T \cdot \left(\frac{n_{1m*}}{1000}\right)^3$$

The values for i and a_{th} can be found in the selection tables.

The values for a_{thEL} and fB_T can be found in the corresponding tables in this chapter.

The value for the torque of the motor at operating point M_{op} with the determined average input speed n_{1m*} can be found in the motor curve of Chapter [▶ 17.3]. Note the size, nominal speed n_N and cooling type of the motor. The figure below shows an example of reading the torque M_{op} of a motor with convection cooling at the operating point.

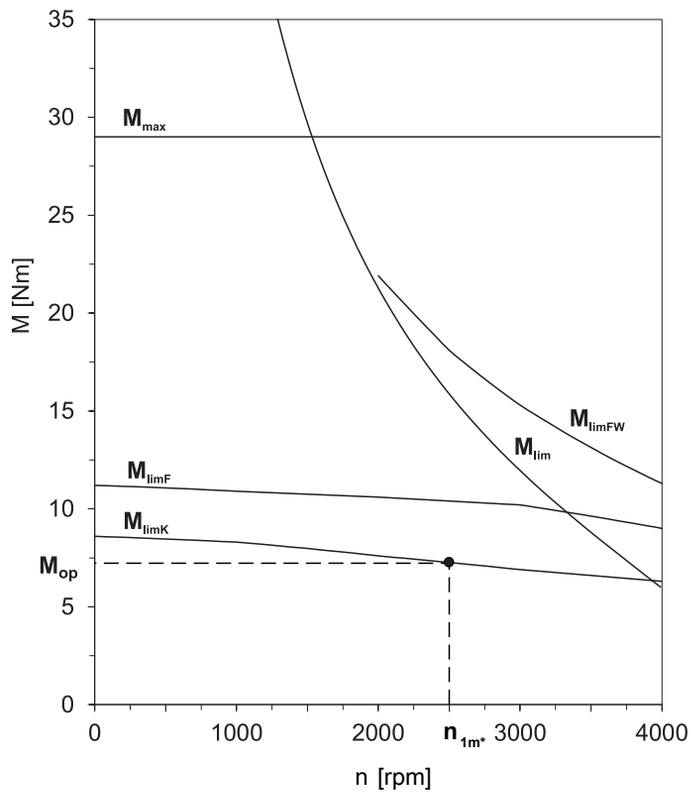

Operating factors

Parameter a_{thEL}

Mounting position	a_{thEL}
EL1, 2, 5, 6	1.0
EL3, 4	1.1

Operating mode	fB_{op}
Uniform continuous operation	1.00
Cyclic operation	1.25
Reversing load cyclic operation	1.40

Run time	fB_t
Daily runtime ≤ 8 h	1.00
Daily runtime ≤ 16 h	1.15
Daily runtime ≤ 24 h	1.20

Cyclic operation	fB_{ZB}
≤ 1000 load changes/hour (LW/h)	1.00
> 1000 load changes/hour (LW/h)	1.15

Temperature		fB_T
Motor cooling	**Surrounding temperature**	
Motor with forced ventilation	≤ 20 °C	0.9
	≤ 30 °C	1.0
	≤ 40 °C	1.15
Motor with convection cooling	≤ 20 °C	1.0
	≤ 30 °C	1.1
	≤ 40 °C	1.25

Notes

- The maximum permitted gear unit temperature (see the "Other product features" chapter) must not be exceeded. Doing so may result in damage to the geared motor.
- For braking from full speed (for example when the power fails or when setting up the machine), note the permitted gear unit torques (M_{2acc}, M_{2NOT}) in the selection tables.

12.6.2 Permitted shaft loads for the output shaft

The values specified in the tables apply to the permitted shaft loads:

- For shaft dimensions in accordance with the catalog
- For output speeds $n_{2m*} \leq 100$ rpm ($F^{2axN} = F_{2ax100}$; $F_{2radN} = F_{2rad100}$; $M_{2kN} = M_{2k100}$)
- Only if radial forces on the gear unit are stabilized by its pilots (housing, flange shaft)

Permitted shaft loads for standard bearing S

Type	z_2 [mm]	F_{2ax100} [N]	$F_{2rad100}$ [N]	$F_{2rad,acc}$ [N]	M_{2k100} [Nm]	$M_{2k,acc}$ [Nm]	C_{2k} [Nm/ arcmin]
PH3	62.5	1650	1613	1613	101	101	75
PH4	83.0	2150	3095	3571	257	296	192
PH5	97.0	4150	4536	4897	440	475	429
PH7	86.0	6150	17045	17045	1466	1466	500
PH8	125.5	10050	27778	27778	3486	3486	1550
PH9	155.0	33000	48387	70968	7500	11000	7500
PH10	171.0	50000	51462	73099	8800	12500	9500

Permitted shaft loads for reinforced bearing V

Type	z_2 [mm]	F_{2ax100} [N]	$F_{2rad100}$ [N]	$F_{2rad,acc}$ [N]	M_{2k100} [Nm]	$M_{2k,acc}$ [Nm]	C_{2k} [Nm/ arcmin]
PH3	66.5	2200	2250	2250	150	150	80
PH4	88.5	2900	4000	4000	354	354	217
PH5	104.0	5000	5500	5500	572	572	478

For other output speeds, download diagrams at http://configurator.stoeber.de.

The following applies to output speeds n_{2m*} > 100 rpm:

$$F_{2axN} = \frac{F_{2ax100}}{\sqrt[3]{\frac{n_{2m*}}{100\ \text{rpm}}}} \qquad F_{2radN} = \frac{F_{2rad100}}{\sqrt[3]{\frac{n_{2m*}}{100\ \text{rpm}}}} \qquad M_{2kN} = \frac{M_{2k100}}{\sqrt[3]{\frac{n_{2m*}}{100\ \text{rpm}}}}$$

The values for F_{2ax100}, $F_{2rad100}$ and M_{2k100} can be found in the table "Permitted shaft loads" in this chapter.

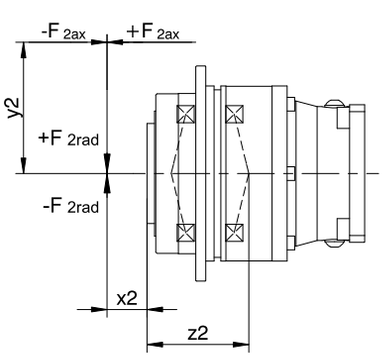

Fig. 1: Force application points

You can determine the permitted radial forces from the permitted breakdown torque M_{2kN} and $M_{2k,acc}$. The actual radial forces may not exceed the permitted radial forces. The permitted radial forces pertain to the shaft end (x2 = 0).

$$M_{2k,acc*} = \frac{2 \cdot F_{2ax*} \cdot y_2 + F_{2rad,acc*} \cdot (x_2 + z_2)}{1000} \leq M_{2k,acc}$$

For applications with multiple axial and/or radial forces, you must add the forces as vectors.

In the event of EMERGENCY OFF operation (max. 1000 load changes), you can multiply the permitted forces and torques for F_{2ax100}, $F_{2rad100}$ and M_{2k100} by a factor of two.

Also note the calculation for equivalent values:

$$M_{2k,eq^*} = \sqrt[3]{\frac{\left|n_{2m,1^*}\right| \cdot t_{1^*} \cdot \left|M_{2k,acc,1^*}{}^3\right| + \ldots + \left|n_{2m,n^*}\right| \cdot t_{n^*} \cdot \left|M_{2k,acc,n^*}{}^3\right|}{\left|n_{2m,1^*}\right| \cdot t_{1^*} + \ldots + \left|n_{2m,n^*}\right| \cdot t_{n^*}}} \leq M_{2kN}$$

$$F_{2rad,eq^*} = \sqrt[3]{\frac{\left|n_{2m,1^*}\right| \cdot t_{1^*} \cdot \left|F_{2rad,acc,1^*}{}^3\right| + \ldots + \left|n_{2m,n^*}\right| \cdot t_{n^*} \cdot \left|F_{2rad,acc,n^*}{}^3\right|}{\left|n_{2m,1^*}\right| \cdot t_{1^*} + \ldots + \left|n_{2m,n^*}\right| \cdot t_{n^*}}} \leq F_{2radN}$$

$$F_{2ax,eq^*} \leq F_{2axN}$$

The following apply to the bearing service life L_{10h} ($ED_{10} \leq 40\%$):

$L_{10h} > 10000$ h with $1 < M_{2kN}/M_{2k^*} < 1.25$

$L_{10h} > 20000$ h with $1.25 < M_{2kN}/M_{2k^*} < 1.5$

$L_{10h} > 30000$ h with $1.5 < M_{2kN}/M_{2k^*}$

For different duty cycles:

$$L_{10h} > L_{10h(ED_{10}=40\%)} \cdot \frac{40\%}{ED_{10}}$$

12.6.3 Recommendation for radial shaft seal rings

For a duty cycle > 60% and higher surrounding temperatures, we recommend radial shaft seal rings made of FKM at the output.

Properties:

- Excellent temperature resistance
- High chemical stability
- Very good resistance to aging
- Excellent resistance to mineral oils and greases
- For use in the food, beverage and pharmaceutical industries

Leak-proofness

Our gear units are equipped with high-quality radial shaft seal rings and checked for leaks. However, a leak cannot be fully ruled out over the length of use of a gear unit. If you use a gear unit with goods incompatible with the lubricant, you must take measures to prevent direct contact with the gear unit lubricant in case of a leak.

12.6.4 Reverse operation

To ensure lubrication for circulating gearing parts during cyclic reverse operation from ± 20° to ± 90° at the output, pay careful attention to the position of the output shaft for the horizontal mounting of the gear unit, as shown in the diagrams below.

The images show the center position of reverse operation.

Cyclic reverse operation ≤ ± 20° on request.

Size 3 – 10
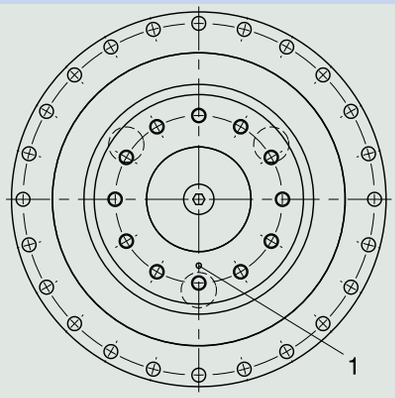
1 Position of the mark: bottom

Please note that the hole pattern may be different, depending on the size of the planetary gear unit.

12.7 Additional documentation

Additional documentation related to the product can be found at
http://www.stoeber.de/en/downloads/

Enter the ID of the documentation in the Search... field.

Documentation	ID
Operating manual for KL/KS/PHK/PHKX/PHQK/PK/PKX right-angle servo gear units and right-angle servo geared motors	443150_en