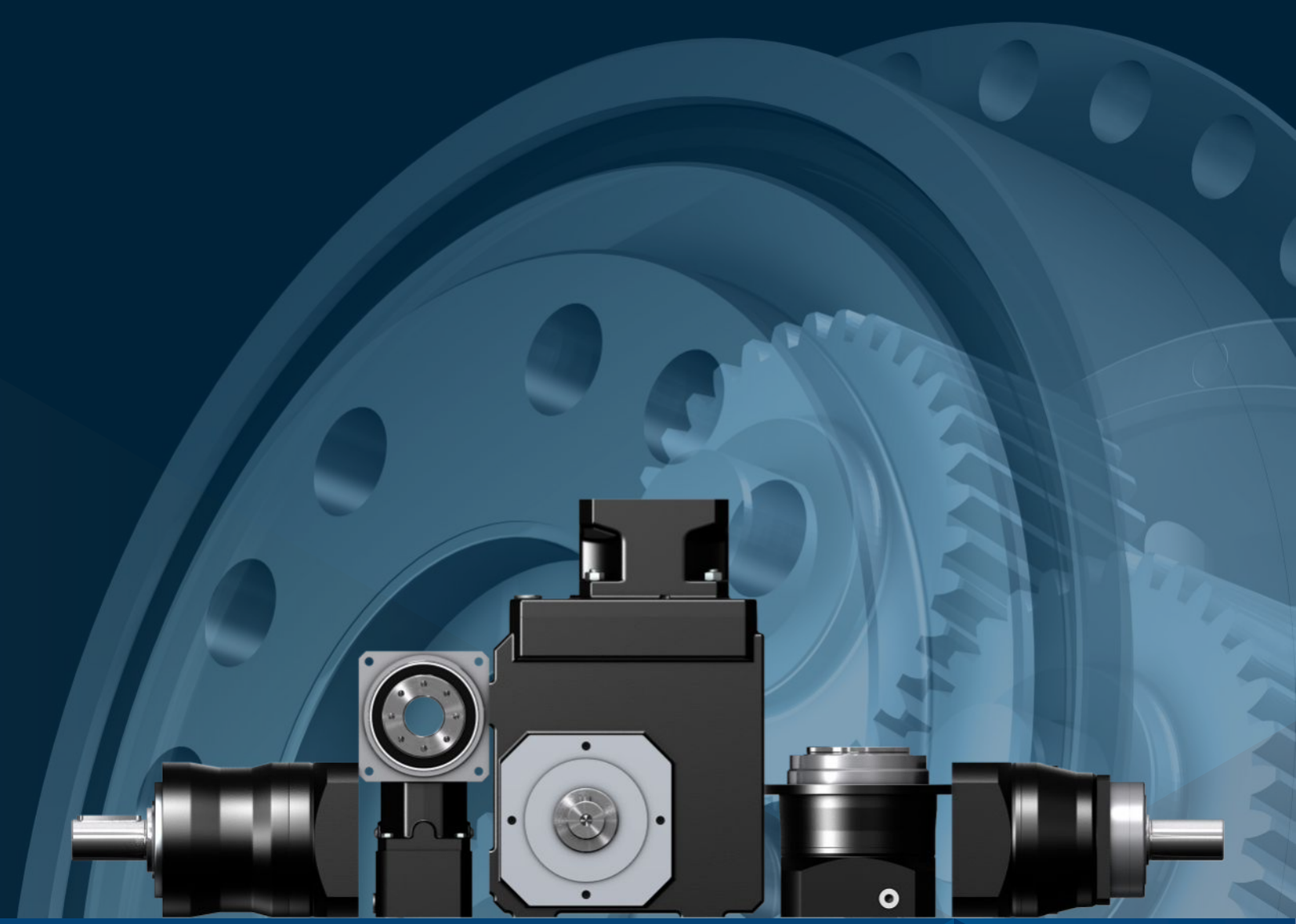

Servo gear units

STÖBER

Servo gear units

One partner. All the possibilities.

STOBER has developed and produced excellent drive technology since 1934 and is active internationally with around 800 employees at 14 locations. STOBER impresses machine manufacturers in wide-ranging industries and markets around the world with tailor-made, highly efficient drive systems for demanding movements.

"Our vision is to be the preferred partner for perfect movement."

- Andreas Thiel, CEO of STÖBER Antriebstechnik.

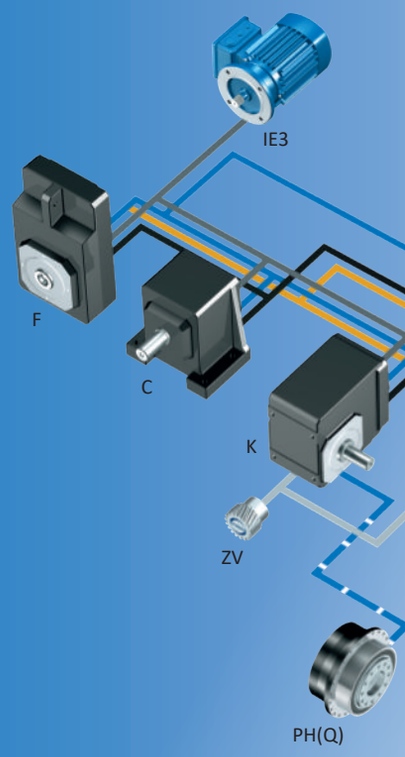

Servo gear units – what you can expect!

Learn more about the exceptional adaptability of our compact planetary gear units. From the high positioning accuracy of our space-saving offset helical gear units, to our universal helical gear units for harsh continuous operation and torsionally stiff STOBER helical bevel gear units. Featuring helical gearing throughout and attachment to all common synchronous servo motors in the blink of an eye using different adapters. It's impossible to be more flexible!

At home in the world of demanding motion

Gear units

Geared motors

Motors

Cables and drive controllers

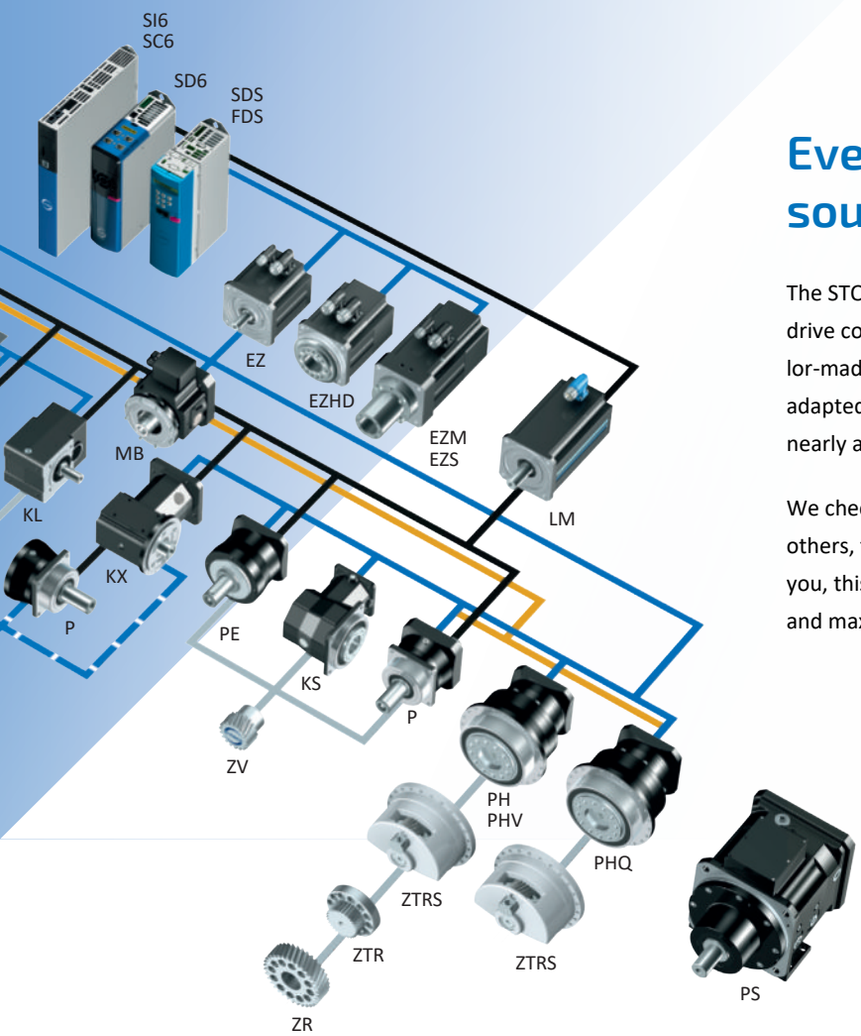

Everything from a single source.

The STOBER drive system consisting of gear units, motors, cables and drive controllers has a modular design and is freely scalable—for tailor-made, compact and powerful machine concepts. It can be adapted to your individual requirements and combined as needed in nearly all industries and applications areas.

We check every single component and how it works together with others, taking on the responsibility for the complete drive train. For you, this means that one contact partner, certified operating safety and maximum availability are guaranteed.

Need special solutions?

Numerous one-of-a-kind product highlights and project-related adjustments make it possible. With a holistic approach to your specific task, we work together on individualized solutions that are optimally coordinated to your requirements. Dedicated and solution-oriented in the support of your visions and projects.

STOBER moves integrally and precisely.

"We put ideas in motion with passion and a great deal of dedication. In the process, we rely on our decades of experience and an exceptionally broad range of products. Our customers benefit from precise, practical system solutions with uncompromising quality and expert individual consultation."

- Patrick Stöber, CEO of STÖBER Antriebstechnik.

STOBER moves as a team and with personality.

As a family-owned company, close relationships are extremely important to us. We build relationships with our employees, customers, and partners based on trust. We put people first.

We advocate for our employees' well-being, see things from our customers' perspectives, and demonstrate personal commitment to our mutual success.

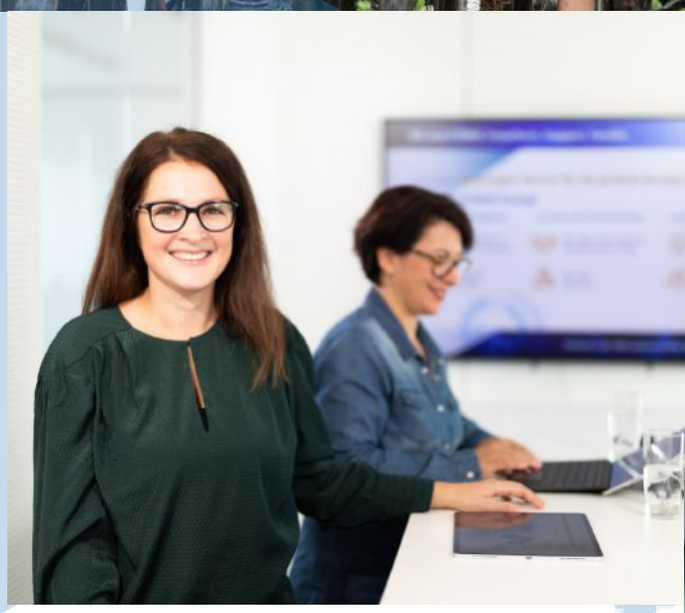

"We have installed gear units, motors and drive controllers from STOBER in nearly all our systems. STOBER supports us in new projects from the first stroke of a pencil in the design phase until commissioning. Our years of cooperation are shaped by openness and honesty and emanate a rather special spirit. The technical consulting, the support—that is real, experienced partnership"

- Jürgen Leicht, Managing Partner of Leicht Stanzautomation.

Working together. Worldwide. Successfully.

With an eye to the future, STOBER is facing the challenges of digitalization and investing in integrated solutions and a strong global production, sales and service presence. STOBER China was founded at the end of 2019. As a result, we are present in more than 40 countries around in the world with eleven subsidiaries and 80 service partners.

STOBER drives
Systems technology
Taicang, China.

Table of contents

1 Selection tool 9

2 P planetary gear units 13

3 PH planetary gear units 37

4 PHQ planetary gear units 55

5 PHV planetary gear units 75

6 PE planetary gear units 89

7 C helical gear units 105

8 F offset helical gear units 139

9 KS right-angle servo gear units 175

10 PKX right-angle planetary gear units 201

11 PK right-angle planetary gear units 223

12 PHKX right-angle planetary gear units 247

13 PHK right-angle planetary gear units 265

14 PHQK right-angle planetary gear units 289

15 KL helical bevel gear units 315

16 K helical bevel gear units 349

17 Close to customers around the world 414

18 Appendix 417

1 Selection tool

1.1 Inline and offset gear units

Product chapter	**P**	**PE**	**C**	**F**	**PH**	**PHQ**	**PHV**
Chapter number	[▸ 2]	[▸ 6]	[▸ 7]	[▸ 8]	[▸ 3]	[▸ 4]	[▸ 5]
Technical data							
i	3 – 100	3 – 100	2 – 276	4.3 – 552	4 – 100	5.5 – 600	61 – 121
M_{2acc}	21 – 3450 Nm	17 – 250 Nm	25 – 8000 Nm	53 – 1100 Nm	60 – 7500 Nm	200 – 43000 Nm	4250 – 7500 Nm
$\Delta\phi_2$	1 – 8 arcmin	8 – 13 arcmin	10 – 20 arcmin	5 – 11 arcmin	1 – 4 arcmin	1 – 3 arcmin	3 arcmin
η_{get}	95 – 97 %	95 – 97 %	96 – 97 %	96 – 97 %	93 – 96 %	90 – 96 %	90 %

An explanation of the formula symbols can be found in the chapter [▸ 18.1].

Features							
Power density	★★★★☆	★★★☆☆	★☆☆☆☆	★☆☆☆☆	★★★★☆	★★★★★	★★★★☆
Backlash	★★★★★	★★★☆☆	★★☆☆☆	★★★☆☆	★★★★★	★★★★★	★★★★☆
Price category	€€	€	€	€	€€€	€€€€	€€€
Shaft load	★★★★☆	★★☆☆☆	★★☆☆☆	★★★☆☆	★★★★★	★★★★★	★★★★★
Smooth operation	★★★★☆	★★★☆☆	★★★☆☆	★★★☆☆	★★★★☆	★★★★☆	★★★★☆
Torsional stiffness	★★★☆☆	★★★☆☆	★★☆☆☆	★★☆☆☆	★★★★☆	★★★★★	★★★★☆
Mass moment of inertia	★★★★☆	★★★★☆	★★★★☆	★★★★☆	★★★★☆	★★★★☆	★★★★☆
Key	★☆☆☆☆ good | ★★★★★ excellent € Economy | €€€€€ Premium						
Shaft design							
Solid shaft with feather key	✓	✓	✓	✓			
Solid shaft without feather key	✓		C0 – C5: ✓ Starting at C6: Request	✓			
Hollow shaft with keyway				✓			
Hollow shaft with shrink ring				✓			
Flange shaft					✓	✓	✓
Bearing design							
Standard	✓	✓	✓	✓	✓	✓	✓
Axially reinforced	✓						
Radially reinforced	✓						
Reinforced					✓ (PH3 – PH5)	✓ (PHQ4 – PHQ5)	
Maintenance-free	✓	✓	C0 – C5: ✓	✓	✓	✓	✓

1 Selection tool

1.2 Right-angle gear units

Product chapter	**KS**	**PKX**	**PK**
Chapter number	[▸ 9]	[▸ 10]	[▸ 11]
Technical data			
i	6 – 200	3 – 300	12 – 561
M_{2acc}	90 – 400 Nm	21 – 3300 Nm	200 – 3105 Nm
$\Delta\phi_2$	4 – 6 arcmin	2 – 8.5 arcmin	1.5 – 5 arcmin
η_{get}	93 – 95 %	94 – 96 %	94 %

An explanation of the formula symbols can be found in the chapter [▸ 18.1].

Features			
Power density	★★★☆☆	★★★★☆	★★★☆☆
Backlash	★★★☆☆	★★★★★	★★★★★
Price category	€€€	€€€	€€€
Shaft load	★★★★★	★★★★☆	★★★★☆
Smooth operation	★★★★☆	★★☆☆☆	★★★☆☆
Torsional stiffness	★★★☆☆	★★★☆☆	★★★☆☆
Mass moment of inertia	★★★★☆	★★☆☆☆	★★★★☆
Key	★☆☆☆☆ good | ★★★★★ excellent € Economy | €€€€€ Premium		
Shaft design			
Solid shaft with feather key	✓	✓	✓
Solid shaft without feather key	✓	✓	✓
Hollow shaft with shrink ring	✓		
Flange hollow shaft	✓		
Bearing design			
Standard	✓	✓	✓
Axially reinforced		✓	✓
Radially reinforced		✓	✓
Maintenance-free	✓	✓	✓

1 Selection tool

1.2 Right-angle gear units

Product chapter	**KS**	**PHKX**	**PHK**	**PHQK**
Chapter number	[▸ 9]	[▸ 12]	[▸ 13]	[▸ 14]
Technical data				
i	6 – 200	4 – 300	16 – 561	22 – 2242
M_{2acc}	90 – 400 Nm	60 – 2300 Nm	355 – 7500 Nm	316 – 43000 Nm
$\Delta\phi_2$	4 – 6 arcmin	1 – 6 arcmin	1.5 – 4.5 arcmin	1.5 – 4 arcmin
η_{get}	93 – 95 %	92 – 95 %	92 – 93 %	90 – 93 %

An explanation of the formula symbols can be found in the chapter [▸ 18.1].

Features				
Power density	★★★☆☆	★★★★★	★★★★☆	★★★★★
Backlash	★★★☆☆	★★★★★	★★★★★	★★★★★
Price category	€€€	€€€€	€€€€	€€€€€
Shaft load	★★★★★	★★★★★	★★★★★	★★★★★
Smooth operation	★★★★☆	★★☆☆☆	★★★☆☆	★★★☆☆
Torsional stiffness	★★★☆☆	★★★★☆	★★★★☆	★★★★★
Mass moment of inertia	★★★★☆	★★☆☆☆	★★★★☆	★★★★☆
Key	★☆☆☆☆ good | ★★★★★ excellent € Economy | €€€€€ Premium			
Shaft design				
Solid shaft with feather key	✓			
Solid shaft without feather key	✓			
Hollow shaft with shrink ring	✓			
Flange hollow shaft	✓			
Flange shaft		✓	✓	✓
Bearing design				
Standard	✓	✓	✓	✓
Reinforced		✓ (PH3 – PH5)	✓ (PH5)	✓ (PHQ5)
Maintenance-free	✓	✓	✓	✓

1 Selection tool

1.2 Right-angle gear units

Product chapter	**KL**	**K**
Chapter number	[▸ 15]	[▸ 16]
Technical data		
i	4 – 32	4 – 381
M_{2acc}	22 – 65 Nm	50 – 13200 Nm
$\Delta\phi_2$	16 – 25 arcmin	1.5 – 12 arcmin
η_{get}	97 %	94 – 97 %

An explanation of the formula symbols can be found in the chapter [▸ 18.1].

Features		
Power density	★★☆☆☆	★★☆☆☆
Backlash	★☆☆☆☆	★★★☆☆
Price category	€	€€
Shaft load	★★☆☆☆	★★★☆☆
Smooth operation	★★☆☆☆	★★★☆☆
Torsional stiffness	★★☆☆☆	★★☆☆☆
Mass moment of inertia	★★★★☆	★★★★☆
Key	★☆☆☆☆ good | ★★★★★ excellent € Economy | €€€€€ Premium	
Shaft design		
Solid shaft with feather key	✓	✓
Solid shaft without feather key	✓	K1 – K4: ✓ Starting at K5: Request
Solid shaft on both sides	✓	✓
Hollow shaft with keyway	✓	✓
Hollow shaft with shrink ring	✓	✓
Accessories		
Flange	✓	✓
Foot plates	✓	✓
Torque arm bracket		✓
Bearing design		
Standard	✓	✓
Maintenance-free	✓	K1 – K4: ✓

2 P planetary gear units

Table of contents

2.1 Overview 14

2.2 Selection tables 15

2.3 Dimensional drawings 21

2.3.1 G shaft design (solid shaft without feather key) 22

2.3.2 P shaft design (solid shaft with feather key) 24

2.4 Type designation 26

2.4.1 Nameplate 27

2.5 Product description 27

2.5.1 Input options 27

2.5.2 Motor adapter with EasyAdapt coupling (ME/MEL) 28

2.5.3 Motor adapter with FlexiAdapt coupling (MF/MFL) 28

2.5.4 Installation conditions 28

2.5.5 Lubricants 29

2.5.6 Other product features 29

2.5.7 Direction of rotation 29

2.6 Project configuration 29

2.6.1 Drive selection 30

2.6.2 Permitted shaft loads for the output shaft 32

2.6.3 Permitted breakdown torques at the gear unit input 35

2.6.4 Recommendation for radial shaft seal rings 35

2.6.5 Reverse operation 36

2.7 Additional documentation 36

2 Planetary gear units

P

2.1 Overview

Helical-geared precision planetary gear units

Features

Power density	★★★★☆
Backlash	★★★★★
Price category	€€
Shaft load	★★★★☆
Smooth operation	★★★★☆
Torsional stiffness	★★★☆☆
Mass moment of inertia	★★★★☆
Helical gearing	✓
Maintenance-free	✓
Any mounting position	✓
Continuous operation without cooling	✓
Reinforced output bearing	✓ (optional)
Easy and reliable attachment to any synchronous servo motor	✓

Key ★☆☆☆☆ good | ★★★★★ excellent
€ Economy | €€€€€ Premium

Technical data

i	3 – 100
M_{2acc}	21 – 3450 Nm
$\Delta\phi_2$	1 – 8 arcmin
η_{get}	95 – 97 %

2.2 Selection tables

The technical data specified in the selection tables applies to:

- Installation altitudes up to 1000 m above sea level
- Surrounding temperatures from 0 °C to 40 °C
- Without consideration for thermal limiting performance
- M_{2acc}, M_{2accHT}: Solid shaft design without feather key (we generally recommend this shaft design for cyclic operation)

You can find the mass moment of inertia J_1 for smaller motor shaft diameters and all other technical data at http://configurator.stoeber.de.

An explanation of the formula symbols can be found in the chapter [▶ 18.1].

i	Type	n_{1MAXDB} [rpm]	n_{1MAXZB} [rpm]	d_{MW} [mm]	J_1 [kgcm²]	m [kg]	$\Delta\varphi_2$ [arcmin]	$\Delta\varphi_{2red}$ [arcmin]	C_2 [Nm/arcmin]	L_{pA} [dB(A)]	M_{2N} [Nm]	M_{2acc} [Nm]	M_{2accHT} [Nm]	M_{2NOT} [Nm]
P231 ($M_{2acc,max}$ = 25 Nm)														
4.000	P231_0040 ME	6000	8000	≤14	0.14	1.1	6.0	–	1.8	59	16	25	–	51
4.000	P231_0040 MEL	6000	8000	≤19	0.43	1.5	6.0	–	1.9	59	16	25	–	51
5.000	P231_0050 ME	6000	8000	≤14	0.12	1.1	6.0	–	1.9	57	16	25	–	51
5.000	P231_0050 MEL	6000	8000	≤19	0.41	1.5	6.0	–	1.9	57	16	25	–	51
7.000	P231_0070 ME	6000	8000	≤14	0.11	1.1	6.0	–	1.8	56	16	23	–	46
7.000	P231_0070 MEL	6000	8000	≤19	0.40	1.5	6.0	–	1.8	56	16	23	–	46
8.000	P231_0080 ME	6000	8000	≤14	0.10	1.1	6.0	–	1.7	55	14	21	–	41
8.000	P231_0080 MEL	6000	8000	≤19	0.39	1.5	6.0	–	1.7	55	14	21	–	41
10.00	P231_0100 ME	6000	8000	≤14	0.10	1.1	6.0	–	1.6	54	12	21	–	41
10.00	P231_0100 MEL	6000	8000	≤19	0.39	1.5	6.0	–	1.6	54	12	21	–	41
P232 ($M_{2acc,max}$ = 25 Nm)														
16.00	P232_0160 ME	6000	8000	≤14	0.14	1.7	8.0	–	1.8	59	16	24	–	48
16.00	P232_0160 MEL	6000	8000	≤19	0.43	2.1	8.0	–	1.8	59	16	24	–	48
20.00	P232_0200 ME	6000	8000	≤14	0.13	1.7	8.0	–	1.8	59	16	25	–	51
20.00	P232_0200 MEL	6000	8000	≤19	0.43	2.1	8.0	–	1.8	59	16	25	–	51
25.00	P232_0250 ME	6000	8000	≤14	0.12	1.7	8.0	–	1.8	57	16	25	–	51
25.00	P232_0250 MEL	6000	8000	≤19	0.41	2.1	8.0	–	1.8	57	16	25	–	51
28.00	P232_0280 ME	6000	8000	≤14	0.11	1.7	8.0	–	1.8	56	16	24	–	48
28.00	P232_0280 MEL	6000	8000	≤19	0.40	2.1	8.0	–	1.8	56	16	24	–	48
32.00	P232_0320 ME	6000	8000	≤14	0.13	1.7	8.0	–	1.7	59	16	21	–	41
32.00	P232_0320 MEL	6000	8000	≤19	0.42	2.1	8.0	–	1.7	59	16	21	–	41
35.00	P232_0350 ME	6000	8000	≤14	0.11	1.7	8.0	–	1.8	56	18	25	–	51
35.00	P232_0350 MEL	6000	8000	≤19	0.40	2.1	8.0	–	1.8	56	18	25	–	51
40.00	P232_0400 ME	6000	8000	≤14	0.10	1.7	8.0	–	1.8	54	16	24	–	48
40.00	P232_0400 MEL	6000	8000	≤19	0.39	2.1	8.0	–	1.8	54	16	24	–	48
50.00	P232_0500 ME	6000	8000	≤14	0.10	1.7	8.0	–	1.8	54	19	25	–	51
50.00	P232_0500 MEL	6000	8000	≤19	0.39	2.1	8.0	–	1.8	54	19	25	–	51
56.00	P232_0560 ME	6000	8000	≤14	0.11	1.7	8.0	–	1.7	56	16	21	–	41
56.00	P232_0560 MEL	6000	8000	≤19	0.40	2.1	8.0	–	1.7	56	16	21	–	41
70.00	P232_0700 ME	6000	8000	≤14	0.10	1.7	8.0	–	1.8	54	18	23	–	46
70.00	P232_0700 MEL	6000	8000	≤19	0.39	2.1	8.0	–	1.8	54	18	23	–	46
80.00	P232_0800 ME	6000	8000	≤14	0.10	1.7	8.0	–	1.7	54	16	21	–	41
80.00	P232_0800 MEL	6000	8000	≤19	0.39	2.1	8.0	–	1.7	54	16	21	–	41
100.0	P232_1000 ME	6000	8000	≤14	0.10	1.7	8.0	–	1.6	54	16	21	–	41
100.0	P232_1000 MEL	6000	8000	≤19	0.39	2.1	8.0	–	1.6	54	16	21	–	41
P331 ($M_{2acc,max}$ = 80 Nm)														
3.000	P331_0030 ME	3500	7000	≤19	0.67	2.1	4.0	2.0	5.0	62	30	50	50	100
3.000	P331_0030 MEL	3500	7000	≤24	1.1	2.5	4.0	2.0	5.1	62	30	50	50	100
4.000	P331_0040 ME	4000	8000	≤19	0.51	2.1	4.0	2.0	5.3	60	45	65	65	130
4.000	P331_0040 MEL	4000	8000	≤24	0.94	2.5	4.0	2.0	5.3	60	45	65	65	130
5.000	P331_0050 ME	4500	8000	≤19	0.46	2.1	4.0	2.0	5.4	58	45	75	80	150
5.000	P331_0050 MEL	4500	8000	≤24	0.89	2.5	4.0	2.0	5.4	58	45	75	80	150
7.000	P331_0070 ME	5000	8000	≤19	0.42	2.1	4.0	2.0	5.0	57	45	69	75	138
7.000	P331_0070 MEL	5000	8000	≤24	0.85	2.5	4.0	2.0	5.0	57	45	69	75	138
8.000	P331_0080 ME	5000	8000	≤19	0.41	2.1	4.0	2.0	4.6	56	40	63	65	126
8.000	P331_0080 MEL	5000	8000	≤24	0.84	2.5	4.0	2.0	4.6	56	40	63	65	126
10.00	P331_0100 ME	5500	8000	≤19	0.40	2.1	4.0	2.0	4.4	55	36	60	60	120
10.00	P331_0100 MEL	5500	8000	≤24	0.83	2.5	4.0	2.0	4.4	55	36	60	60	120
P332 ($M_{2acc,max}$ = 75 Nm)														
12.00	P332_0120 ME	5500	8000	≤14	0.15	2.2	5.0	3.0	4.6	59	30	50	50	100
12.00	P332_0120 MEL	5500	8000	≤19	0.44	2.6	5.0	3.0	4.6	59	30	50	50	100
16.00	P332_0160 ME	5500	8000	≤14	0.14	2.2	5.0	3.0	5.1	59	45	65	65	130

i	Type	n_{1MAXDB} [rpm]	n_{1MAXZB} [rpm]	d_{MW} [mm]	J_1 [kgcm²]	m [kg]	$\Delta\varphi_2$ [arcmin]	$\Delta\varphi_{2red}$ [arcmin]	C_2 [Nm/arcmin]	L_{pA} [dB(A)]	M_{2N} [Nm]	M_{2acc} [Nm]	M_{2accHT} [Nm]	M_{2NOT} [Nm]
P332 ($M_{2acc,max}$ = 75 Nm)														
16.00	P332_0160 MEL	5500	8000	≤19	0.43	2.6	5.0	3.0	5.1	59	45	65	65	130
20.00	P332_0200 ME	5500	8000	≤14	0.14	2.2	5.0	3.0	5.2	59	50	75	75	150
20.00	P332_0200 MEL	5500	8000	≤19	0.43	2.6	5.0	3.0	5.2	59	50	75	75	150
25.00	P332_0250 ME	6000	8000	≤14	0.12	2.2	5.0	3.0	5.2	57	50	75	75	150
25.00	P332_0250 MEL	6000	8000	≤19	0.41	2.6	5.0	3.0	5.2	57	50	75	75	150
28.00	P332_0280 ME	6000	8000	≤14	0.10	2.2	5.0	3.0	5.1	56	45	65	70	130
28.00	P332_0280 MEL	6000	8000	≤19	0.39	2.6	5.0	3.0	5.1	56	45	65	70	130
32.00	P332_0320 ME	5500	8000	≤14	0.13	2.2	5.0	3.0	4.6	59	48	63	65	126
32.00	P332_0320 MEL	5500	8000	≤19	0.43	2.6	5.0	3.0	4.6	59	48	63	65	126
35.00	P332_0350 ME	6000	8000	≤14	0.10	2.2	5.0	3.0	5.2	56	50	75	75	150
35.00	P332_0350 MEL	6000	8000	≤19	0.39	2.6	5.0	3.0	5.2	56	50	75	75	150
40.00	P332_0400 ME	6000	8000	≤14	0.10	2.2	5.0	3.0	4.8	54	45	65	65	130
40.00	P332_0400 MEL	6000	8000	≤19	0.39	2.6	5.0	3.0	4.8	54	45	65	65	130
50.00	P332_0500 ME	6000	8000	≤14	0.10	2.2	5.0	3.0	5.0	54	50	75	75	150
50.00	P332_0500 MEL	6000	8000	≤19	0.39	2.6	5.0	3.0	5.0	54	50	75	75	150
56.00	P332_0560 ME	6000	8000	≤14	0.10	2.2	5.0	3.0	4.6	56	48	63	65	126
56.00	P332_0560 MEL	6000	8000	≤19	0.39	2.6	5.0	3.0	4.6	56	48	63	65	126
70.00	P332_0700 ME	6000	8000	≤14	0.10	2.2	5.0	3.0	4.9	54	53	69	69	138
70.00	P332_0700 MEL	6000	8000	≤19	0.39	2.6	5.0	3.0	4.9	54	53	69	69	138
80.00	P332_0800 ME	6000	8000	≤14	0.10	2.2	5.0	3.0	4.5	54	48	63	65	126
80.00	P332_0800 MEL	6000	8000	≤19	0.39	2.6	5.0	3.0	4.5	54	48	63	65	126
100.0	P332_1000 ME	6000	8000	≤14	0.10	2.2	5.0	3.0	4.3	54	46	60	60	120
100.0	P332_1000 MEL	6000	8000	≤19	0.39	2.6	5.0	3.0	4.3	54	46	60	60	120
P431 ($M_{2acc,max}$ = 145 Nm)														
3.000	P431_0030 ME	3000	6000	≤24	1.6	3.5	4.0	2.0	12	63	50	100	100	200
3.000	P431_0030 MEL	3000	6000	≤32	3.2	4.3	4.0	2.0	12	63	50	100	100	200
4.000	P431_0040 ME	3300	6500	≤24	1.2	3.5	4.0	2.0	13	61	90	120	130	240
4.000	P431_0040 MEL	3300	6500	≤32	2.8	4.3	4.0	2.0	13	61	90	120	130	240
5.000	P431_0050 ME	3700	7000	≤24	1.0	3.5	4.0	2.0	13	59	90	139	145	277
5.000	P431_0050 MEL	3700	7000	≤32	2.7	4.3	4.0	2.0	13	59	90	139	145	277
7.000	P431_0070 ME	4000	8000	≤24	0.92	3.5	4.0	2.0	11	58	90	135	143	271
7.000	P431_0070 MEL	4000	8000	≤32	2.5	4.3	4.0	2.0	11	58	90	135	143	271
8.000	P431_0080 ME	4000	8000	≤24	0.90	3.5	4.0	2.0	9.7	57	80	120	125	239
8.000	P431_0080 MEL	4000	8000	≤32	2.5	4.3	4.0	2.0	9.7	57	80	120	125	239
10.00	P431_0100 ME	4000	8000	≤24	0.88	3.5	4.0	2.0	9.1	56	75	115	115	230
10.00	P431_0100 MEL	4000	8000	≤32	2.5	4.3	4.0	2.0	9.1	56	75	115	115	230
P432 ($M_{2acc,max}$ = 139 Nm)														
12.00	P432_0120 ME	3500	7000	≤19	0.54	4.4	5.0	3.0	11	60	60	100	100	200
12.00	P432_0120 MEL	3500	7000	≤24	0.97	4.9	5.0	3.0	11	60	60	100	100	200
16.00	P432_0160 ME	4000	8000	≤19	0.51	4.4	5.0	3.0	12	60	89	130	130	260
16.00	P432_0160 MEL	4000	8000	≤24	0.94	4.9	5.0	3.0	12	60	89	130	130	260
20.00	P432_0200 ME	4000	8000	≤19	0.50	4.4	5.0	3.0	12	60	95	134	139	268
20.00	P432_0200 MEL	4000	8000	≤24	0.93	4.9	5.0	3.0	12	60	95	134	139	268
25.00	P432_0250 ME	4500	8000	≤19	0.46	4.4	5.0	3.0	12	58	100	134	139	268
25.00	P432_0250 MEL	4500	8000	≤24	0.89	4.9	5.0	3.0	12	58	100	134	139	268
28.00	P432_0280 ME	4500	8000	≤19	0.43	4.4	5.0	3.0	12	57	95	130	130	260
28.00	P432_0280 MEL	4500	8000	≤24	0.86	4.9	5.0	3.0	12	57	95	130	130	260
32.00	P432_0320 ME	4000	8000	≤19	0.49	4.4	5.0	3.0	9.6	60	90	126	131	253
32.00	P432_0320 MEL	4000	8000	≤24	0.92	4.9	5.0	3.0	9.6	60	90	126	131	253
35.00	P432_0350 ME	4500	8000	≤19	0.43	4.4	5.0	3.0	12	57	102	133	138	266
35.00	P432_0350 MEL	4500	8000	≤24	0.86	4.9	5.0	3.0	12	57	102	133	138	266
40.00	P432_0400 ME	5000	8000	≤19	0.41	4.4	5.0	3.0	12	55	87	130	130	260
40.00	P432_0400 MEL	5000	8000	≤24	0.84	4.9	5.0	3.0	12	55	87	130	130	260
50.00	P432_0500 ME	5000	8000	≤19	0.41	4.4	5.0	3.0	12	55	102	132	138	264
50.00	P432_0500 MEL	5000	8000	≤24	0.83	4.9	5.0	3.0	12	55	102	132	138	264
56.00	P432_0560 ME	5000	8000	≤19	0.42	4.4	5.0	3.0	9.6	57	88	115	115	230
56.00	P432_0560 MEL	5000	8000	≤24	0.85	4.9	5.0	3.0	9.6	57	88	115	115	230
70.00	P432_0700 ME	5000	8000	≤19	0.40	4.4	5.0	3.0	11	55	97	127	127	253
70.00	P432_0700 MEL	5000	8000	≤24	0.83	4.9	5.0	3.0	11	55	97	127	127	253
80.00	P432_0800 ME	5000	8000	≤19	0.40	4.4	5.0	3.0	9.6	55	88	115	115	230
80.00	P432_0800 MEL	5000	8000	≤24	0.83	4.9	5.0	3.0	9.6	55	88	115	115	230
100.0	P432_1000 ME	5000	8000	≤19	0.40	4.4	5.0	3.0	9.0	55	85	110	110	220
100.0	P432_1000 MEL	5000	8000	≤24	0.83	4.9	5.0	3.0	9.0	55	85	110	110	220
P531 ($M_{2acc,max}$ = 385 Nm)														
3.000	P531_0030 ME	2500	5000	≤32	5.3	6.2	3.0	1.0	33	64	120	200	200	400
3.000	P531_0030 MEL	2500	5000	≤38	8.8	7.2	3.0	1.0	33	64	120	200	200	400

i	Type	n_{1MAXDB} [rpm]	n_{1MAXZB} [rpm]	d_{MW} [mm]	J_1 [kgcm²]	m [kg]	$\Delta\varphi_2$ [arcmin]	$\Delta\varphi_{2red}$ [arcmin]	C_2 [Nm/arcmin]	L_{pA} [dB(A)]	M_{2N} [Nm]	M_{2acc} [Nm]	M_{2accHT} [Nm]	M_{2NOT} [Nm]
P531 ($M_{2acc,max}$ = 385 Nm)														
4.000	P531_0040 ME	3000	6000	≤32	3.7	6.2	3.0	1.0	34	62	210	300	320	600
4.000	P531_0040 MEL	3000	6000	≤38	7.2	7.2	3.0	1.0	34	62	210	300	320	600
5.000	P531_0050 ME	3500	7000	≤32	3.2	6.2	3.0	1.0	34	60	220	350	385	700
5.000	P531_0050 MEL	3500	7000	≤38	6.8	7.2	3.0	1.0	34	60	220	350	385	700
7.000	P531_0070 ME	3700	7000	≤32	2.9	6.2	3.0	1.0	31	59	210	333	380	667
7.000	P531_0070 MEL	3700	7000	≤38	6.4	7.2	3.0	1.0	31	59	210	333	380	667
8.000	P531_0080 ME	3700	7000	≤32	2.8	6.2	3.0	1.0	25	58	200	296	300	592
8.000	P531_0080 MEL	3700	7000	≤38	6.3	7.2	3.0	1.0	25	58	200	296	300	592
10.00	P531_0100 ME	3700	7000	≤32	2.7	6.2	3.0	1.0	26	57	180	288	288	575
10.00	P531_0100 MEL	3700	7000	≤38	6.2	7.2	3.0	1.0	26	57	180	288	288	575
P532 ($M_{2acc,max}$ = 364 Nm)														
12.00	P532_0120 ME	3000	6000	≤24	1.3	7.6	4.0	2.0	31	61	120	200	200	400
12.00	P532_0120 MEL	3000	6000	≤32	2.9	8.5	4.0	2.0	31	61	120	200	200	400
16.00	P532_0160 ME	3500	7000	≤24	1.2	7.6	4.0	2.0	33	61	220	300	300	600
16.00	P532_0160 MEL	3500	7000	≤32	2.8	8.5	4.0	2.0	33	61	220	300	300	600
20.00	P532_0200 ME	3500	7000	≤24	1.1	7.6	4.0	2.0	33	61	250	355	364	710
20.00	P532_0200 MEL	3500	7000	≤32	2.7	8.5	4.0	2.0	33	61	250	355	364	710
25.00	P532_0250 ME	3700	7000	≤24	1.0	7.6	4.0	2.0	33	59	260	355	357	710
25.00	P532_0250 MEL	3700	7000	≤32	2.6	8.5	4.0	2.0	33	59	260	355	357	710
28.00	P532_0280 ME	4000	8000	≤24	0.95	7.6	4.0	2.0	32	58	231	300	300	600
28.00	P532_0280 MEL	4000	8000	≤32	2.6	8.5	4.0	2.0	32	58	231	300	300	600
32.00	P532_0320 ME	3500	7000	≤24	1.1	7.6	4.0	2.0	25	61	240	312	363	624
32.00	P532_0320 MEL	3500	7000	≤32	2.7	8.5	4.0	2.0	25	61	240	312	363	624
35.00	P532_0350 ME	4000	8000	≤24	0.94	7.6	4.0	2.0	33	58	270	352	352	704
35.00	P532_0350 MEL	4000	8000	≤32	2.5	8.5	4.0	2.0	33	58	270	352	352	704
40.00	P532_0400 ME	4000	8000	≤24	0.89	7.6	4.0	2.0	31	56	214	300	300	600
40.00	P532_0400 MEL	4000	8000	≤32	2.5	8.5	4.0	2.0	31	56	214	300	300	600
50.00	P532_0500 ME	4000	8000	≤24	0.89	7.6	4.0	2.0	32	56	269	352	352	704
50.00	P532_0500 MEL	4000	8000	≤32	2.5	8.5	4.0	2.0	32	56	269	352	352	704
56.00	P532_0560 ME	4000	8000	≤24	0.93	7.6	4.0	2.0	25	58	221	288	288	575
56.00	P532_0560 MEL	4000	8000	≤32	2.5	8.5	4.0	2.0	25	58	221	288	288	575
70.00	P532_0700 ME	4200	8000	≤24	0.88	7.6	4.0	2.0	30	56	263	345	357	690
70.00	P532_0700 MEL	4200	8000	≤32	2.5	8.5	4.0	2.0	30	56	263	345	357	690
80.00	P532_0800 ME	4200	8000	≤24	0.88	7.6	4.0	2.0	25	56	221	288	288	575
80.00	P532_0800 MEL	4200	8000	≤32	2.5	8.5	4.0	2.0	25	56	221	288	288	575
100.0	P532_1000 ME	4200	8000	≤24	0.88	7.6	4.0	2.0	26	56	221	288	288	575
100.0	P532_1000 MEL	4200	8000	≤32	2.5	8.5	4.0	2.0	26	56	221	288	288	575
P731 ($M_{2acc,max}$ = 840 Nm)														
3.000	P731_0030 ME	2200	4000	≤38	15	13	3.0	1.0	62	65	300	500	500	1000
3.000	P731_0030 MEL	2200	4000	≤48	26	17	3.0	1.0	64	65	300	500	500	1000
4.000	P731_0040 ME	2500	5000	≤38	10	13	3.0	1.0	65	63	440	700	725	1335
4.000	P731_0040 MEL	2500	5000	≤48	21	17	3.0	1.0	67	63	440	700	725	1400
5.000	P731_0050 ME	2700	5500	≤38	8.8	13	3.0	1.0	65	61	440	805	840	1610
5.000	P731_0050 MEL	2700	5500	≤48	19	17	3.0	1.0	65	61	440	805	840	1610
7.000	P731_0070 ME	3000	6000	≤38	7.6	13	3.0	1.0	60	60	440	805	840	1610
7.000	P731_0070 MEL	3000	6000	≤48	18	17	3.0	1.0	61	60	440	805	840	1610
8.000	P731_0080 ME	3000	6000	≤38	7.3	13	3.0	1.0	57	59	400	668	700	1336
8.000	P731_0080 MEL	3000	6000	≤48	17	17	3.0	1.0	57	59	400	668	700	1336
10.00	P731_0100 ME	3000	6000	≤38	7.0	13	3.0	1.0	54	58	350	575	575	1150
10.00	P731_0100 MEL	3000	6000	≤48	17	17	3.0	1.0	54	58	350	575	575	1150
P732 ($M_{2acc,max}$ = 805 Nm)														
12.00	P732_0120 ME	2500	5000	≤32	4.1	15	4.0	2.0	61	62	295	500	500	1000
12.00	P732_0120 MEL	2500	5000	≤38	7.6	16	4.0	2.0	61	62	295	500	500	1000
16.00	P732_0160 ME	3000	6000	≤32	3.7	15	4.0	2.0	65	62	450	700	700	1400
16.00	P732_0160 MEL	3000	6000	≤38	7.3	16	4.0	2.0	65	62	450	700	700	1400
20.00	P732_0200 ME	3000	6000	≤32	3.6	15	4.0	2.0	64	62	460	805	805	1610
20.00	P732_0200 MEL	3000	6000	≤38	7.1	16	4.0	2.0	64	62	460	805	805	1610
25.00	P732_0250 ME	3500	7000	≤32	3.3	15	4.0	2.0	64	60	500	805	805	1610
25.00	P732_0250 MEL	3500	7000	≤38	6.8	16	4.0	2.0	64	60	500	805	805	1610
28.00	P732_0280 ME	3700	7000	≤32	3.0	15	4.0	2.0	64	59	538	700	700	1400
28.00	P732_0280 MEL	3700	7000	≤38	6.5	16	4.0	2.0	64	59	538	700	700	1400
32.00	P732_0320 ME	3000	6000	≤32	3.5	15	4.0	2.0	57	62	470	730	730	1460
32.00	P732_0320 MEL	3000	6000	≤38	7.1	16	4.0	2.0	57	62	470	730	730	1460
35.00	P732_0350 ME	3700	7000	≤32	2.9	15	4.0	2.0	64	59	540	770	805	1540
35.00	P732_0350 MEL	3700	7000	≤38	6.4	16	4.0	2.0	64	59	540	770	805	1540
40.00	P732_0400 ME	3700	7000	≤32	2.7	15	4.0	2.0	63	57	454	700	700	1400

i	Type	n_{1MAXDB} [rpm]	n_{1MAXZB} [rpm]	d_{MW} [mm]	J_1 [kgcm²]	m [kg]	$\Delta\varphi_2$ [arcmin]	$\Delta\varphi_{2red}$ [arcmin]	C_2 [Nm/arcmin]	L_{pA} [dB(A)]	M_{2N} [Nm]	M_{2acc} [Nm]	M_{2accHT} [Nm]	M_{2NOT} [Nm]
P732 ($M_{2acc,max}$ = 805 Nm)														
40.00	P732_0400 MEL	3700	7000	≤38	6.2	16	4.0	2.0	63	57	454	700	700	1400
50.00	P732_0500 ME	3700	7000	≤32	2.7	15	4.0	2.0	63	57	565	770	805	1540
50.00	P732_0500 MEL	3700	7000	≤38	6.2	16	4.0	2.0	63	57	565	770	805	1540
56.00	P732_0560 ME	3700	7000	≤32	2.9	15	4.0	2.0	57	59	500	650	650	1300
56.00	P732_0560 MEL	3700	7000	≤38	6.4	16	4.0	2.0	57	59	500	650	650	1300
70.00	P732_0700 ME	3700	7000	≤32	2.7	15	4.0	2.0	60	57	584	762	799	1525
70.00	P732_0700 MEL	3700	7000	≤38	6.2	16	4.0	2.0	60	57	584	762	799	1525
80.00	P732_0800 ME	3700	7000	≤32	2.7	15	4.0	2.0	57	57	477	620	620	1240
80.00	P732_0800 MEL	3700	7000	≤38	6.2	16	4.0	2.0	57	57	477	620	620	1240
100.0	P732_1000 ME	3700	7000	≤32	2.7	15	4.0	2.0	54	57	423	550	550	1100
100.0	P732_1000 MEL	3700	7000	≤38	6.2	16	4.0	2.0	54	57	423	550	550	1100
P831 ($M_{2acc,max}$ = 2000 Nm)														
3.000	P831_0030 ME	1800	3000	≤48	59	30	3.0	1.0	170	66	800	1200	1200	1825
3.000	P831_0030 MEL	1800	3000	≤60	87	34	3.0	1.0	178	66	800	1200	1200	2400
4.000	P831_0040 ME	2000	3500	≤48	36	30	3.0	1.0	176	64	880	1760	1760	2433
4.000	P831_0040 MEL	2000	3500	≤60	64	34	3.0	1.0	180	64	880	1760	1760	3230
5.000	P831_0050 ME	2500	4000	≤48	28	30	3.0	1.0	178	62	1100	1840	2000	3041
5.000	P831_0050 MEL	2500	4000	≤60	56	34	3.0	1.0	181	62	1100	1840	2000	3230
7.000	P831_0070 ME	2800	4500	≤48	23	30	3.0	1.0	167	61	1000	1760	1840	3230
7.000	P831_0070 MEL	2800	4500	≤60	51	34	3.0	1.0	168	61	1000	1760	1840	3230
8.000	P831_0080 ME	2800	4500	≤48	21	30	3.0	1.0	160	60	850	1500	1500	3000
8.000	P831_0080 MEL	2800	4500	≤60	50	34	3.0	1.0	161	60	850	1500	1500	3000
10.00	P831_0100 ME	2800	4500	≤48	20	30	3.0	1.0	149	59	850	1380	1380	2760
10.00	P831_0100 MEL	2800	4500	≤60	48	34	3.0	1.0	149	59	850	1380	1380	2760
P832 ($M_{2acc,max}$ = 2000 Nm)														
12.00	P832_0120 ME	2200	4500	≤38	12	33	4.0	2.0	166	63	800	1200	1200	2400
12.00	P832_0120 MEL	2200	4500	≤48	22	37	4.0	2.0	167	63	800	1200	1200	2400
16.00	P832_0160 ME	2700	5000	≤38	11	33	4.0	2.0	173	63	1100	1600	1600	3200
16.00	P832_0160 MEL	2700	5000	≤48	21	37	4.0	2.0	174	63	1100	1600	1600	3200
20.00	P832_0200 ME	2700	5000	≤38	10	33	4.0	2.0	176	63	1250	1840	2000	3230
20.00	P832_0200 MEL	2700	5000	≤48	20	37	4.0	2.0	177	63	1250	1840	2000	3230
25.00	P832_0250 ME	2900	5000	≤38	8.8	33	4.0	2.0	176	61	1300	1840	2000	3230
25.00	P832_0250 MEL	2900	5000	≤48	19	37	4.0	2.0	176	61	1300	1840	2000	3230
28.00	P832_0280 ME	3000	5000	≤38	7.8	33	4.0	2.0	171	60	1100	1600	1600	3200
28.00	P832_0280 MEL	3000	5000	≤48	18	37	4.0	2.0	172	60	1100	1600	1600	3200
32.00	P832_0320 ME	2700	5000	≤38	9.9	33	4.0	2.0	159	63	1173	1525	1595	3049
32.00	P832_0320 MEL	2700	5000	≤48	20	37	4.0	2.0	159	63	1173	1525	1595	3049
35.00	P832_0350 ME	3000	6000	≤38	7.6	33	4.0	2.0	175	60	1415	1840	2000	3230
35.00	P832_0350 MEL	3000	6000	≤48	18	37	4.0	2.0	175	60	1415	1840	2000	3230
40.00	P832_0400 ME	3000	6000	≤38	7.1	33	4.0	2.0	168	58	1097	1600	1600	3200
40.00	P832_0400 MEL	3000	6000	≤48	17	37	4.0	2.0	168	58	1097	1600	1600	3200
50.00	P832_0500 ME	3000	6000	≤38	7.0	33	4.0	2.0	173	58	1415	1840	2000	3230
50.00	P832_0500 MEL	3000	6000	≤48	17	37	4.0	2.0	173	58	1415	1840	2000	3230
56.00	P832_0560 ME	3000	6000	≤38	7.5	33	4.0	2.0	159	60	1062	1380	1380	2760
56.00	P832_0560 MEL	3000	6000	≤48	18	37	4.0	2.0	159	60	1062	1380	1380	2760
70.00	P832_0700 ME	3000	6000	≤38	7.0	33	4.0	2.0	164	58	1238	1610	1610	3220
70.00	P832_0700 MEL	3000	6000	≤48	17	37	4.0	2.0	164	58	1238	1610	1610	3220
80.00	P832_0800 ME	3000	6000	≤38	6.9	33	4.0	2.0	159	58	1062	1380	1380	2760
80.00	P832_0800 MEL	3000	6000	≤48	17	37	4.0	2.0	159	58	1062	1380	1380	2760
100.0	P832_1000 ME	3000	6000	≤38	6.9	33	4.0	2.0	148	58	1015	1320	1320	2640
100.0	P832_1000 MEL	3000	6000	≤48	17	37	4.0	2.0	148	58	1015	1320	1320	2640
P931 ($M_{2acc,max}$ = 3450 Nm)														
4.000	P931_0040 ME	1800	3000	≤60	100	50	3.0	–	407	70	2000	3000	–	5599
5.000	P931_0050 ME	2000	3500	≤60	82	50	3.0	–	407	68	2000	3450	–	6900
7.000	P931_0070 ME	2300	4000	≤60	69	50	3.0	–	375	66	2100	3105	–	6210
10.00	P931_0100 ME	2500	4000	≤60	62	50	3.0	–	323	64	1769	2300	–	4600
P932 ($M_{2acc,max}$ = 3450 Nm)														
16.00	P932_0160 ME	2000	3500	≤48	37	63	4.0	–	403	64	2000	3000	–	6000
16.00	P932_0160 MEL	2000	3500	≤60	65	67	4.0	–	404	64	2000	3000	–	6000
20.00	P932_0200 ME	2000	3500	≤48	35	63	4.0	–	405	64	2483	3450	–	6900
20.00	P932_0200 MEL	2000	3500	≤60	64	67	4.0	–	406	64	2483	3450	–	6900
25.00	P932_0250 ME	2500	4000	≤48	28	63	4.0	–	405	62	2441	3300	–	6600
25.00	P932_0250 MEL	2500	4000	≤60	56	67	4.0	–	406	62	2441	3300	–	6600
28.00	P932_0280 ME	2800	4500	≤48	23	63	4.0	–	401	61	2280	3000	–	6000
28.00	P932_0280 MEL	2800	4500	≤60	51	67	4.0	–	401	61	2280	3000	–	6000
35.00	P932_0350 ME	2800	4500	≤48	23	63	4.0	–	403	61	2376	3300	–	6600

i	Type	n_{1MAXDB} [rpm]	n_{1MAXZB} [rpm]	d_{MW} [mm]	J_1 [kgcm²]	m [kg]	$\Delta\varphi_2$ [arcmin]	$\Delta\varphi_{2red}$ [arcmin]	C_2 [Nm/arcmin]	L_{pA} [dB(A)]	M_{2N} [Nm]	M_{2acc} [Nm]	M_{2accHT} [Nm]	M_{2NOT} [Nm]
P932 ($M_{2acc,max}$ = 3450 Nm)														
35.00	P932_0350 MEL	2800	4500	≤60	51	67	4.0	–	404	61	2376	3300	–	6600
40.00	P932_0400 ME	2800	4500	≤48	20	63	4.0	–	394	59	2000	3000	–	6000
40.00	P932_0400 MEL	2800	4500	≤60	48	67	4.0	–	394	59	2000	3000	–	6000
50.00	P932_0500 ME	2800	4500	≤48	20	63	4.0	–	399	59	2295	3200	–	6400
50.00	P932_0500 MEL	2800	4500	≤60	48	67	4.0	–	399	59	2295	3200	–	6400
70.00	P932_0700 ME	2800	4500	≤48	20	63	4.0	–	372	59	2387	3156	–	6312
70.00	P932_0700 MEL	2800	4500	≤60	48	67	4.0	–	372	59	2387	3156	–	6312
100.0	P932_1000 ME	2800	4500	≤48	20	63	4.0	–	321	59	1692	2200	–	4400
100.0	P932_1000 MEL	2800	4500	≤60	48	67	4.0	–	321	59	1692	2200	–	4400

2.3 Dimensional drawings

In this chapter, you can find the dimensions of the gear units as well as example dimensions of the mountable motor adapters.

Dimensions can exceed the specifications of ISO 2768-mK due to casting tolerances or accumulation of individual tolerances.

We reserve the right to make dimensional changes due to ongoing technical development.

You can download 3D models of our standard drives at http://configurator.stoeber.de.

Tolerances

Solid shaft	Tolerance
Fit	ISO k6
Feather keys	DIN 6885-1, high form A
Balancing	With half feather key

Centering holes in solid shafts in accordance with DIN 332-2, DR shape

Thread size	M4	M5	M6	M8	M10	M12	M16	M20	M24
Thread depth [mm]	10	12.5	16	19	22	28	36	42	50

2.3.1 G shaft design (solid shaft without feather key)

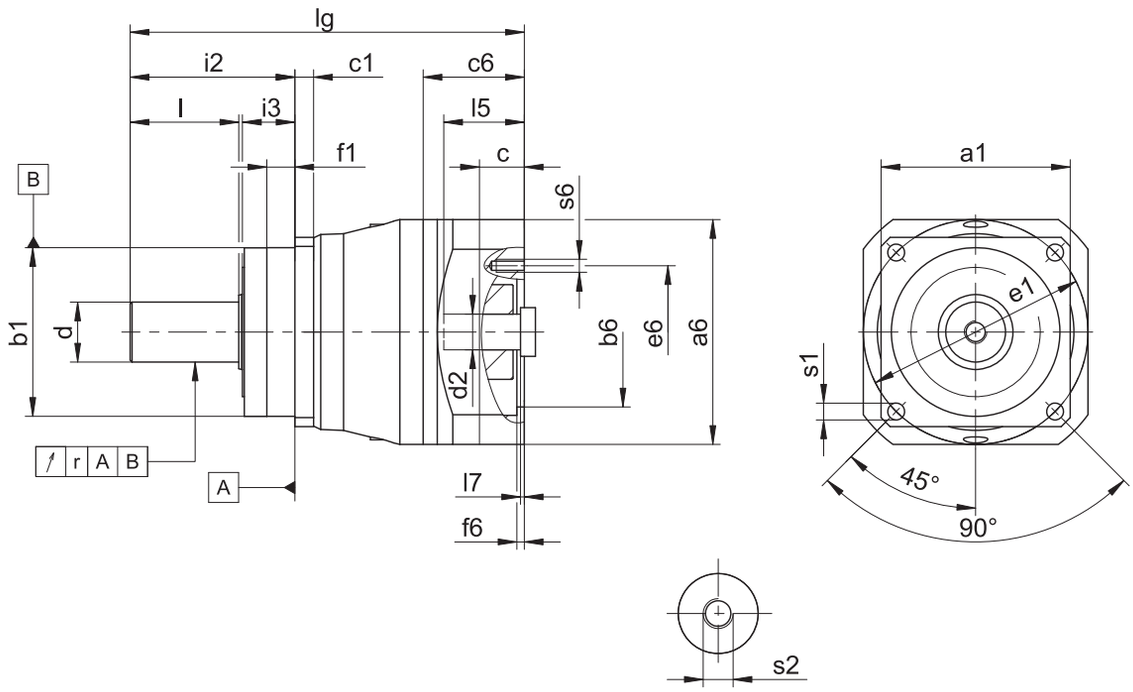

– The radial runout specification applies only to the reinforced bearing D.

Dimensions of gear units

Type	□a1	Øb1	c1	Ød	Øe1	f1	i2	i3	l	r	Øs1	s2
P231	55	50_{h6}	6	12_{k6}	63	7.0	36	12	22	–	5.5	M4
P232	55	50_{h6}	6	12_{k6}	63	7.0	36	12	22	–	5.5	M4
P331	72	60_{h6}	7	16_{k6}	75	7.5	48	18	28	0.025	5.5	M5
P332	72	60_{h6}	7	16_{k6}	75	7.5	48	18	28	0.025	5.5	M5
P431	76	70_{h6}	9	22_{k6}	85	7.5	56	18	36	0.025	6.6	M8
P432	76	70_{h6}	9	22_{k6}	85	7.5	56	18	36	0.025	6.6	M8
P531	101	90_{h6}	10	32_{k6}	120	15.0	88	28	58	0.030	9.0	M12
P532	101	90_{h6}	10	32_{k6}	120	15.0	88	28	58	0.030	9.0	M12
P731	144	130_{h6}	15	40_{k6}	165	3.5	112	27	82	0.035	11.0	M16
P732	144	130_{h6}	15	40_{k6}	165	3.5	112	27	82	0.035	11.0	M16
P831	190	160_{h6}	15	55_{k6}	215	10.0	112	27	82	0.035	13.5	M20
P832	190	160_{h6}	15	55_{k6}	215	10.0	112	27	82	0.035	13.5	M20
P931	212	180_{h6}	17	75_{k6}	250	10.0	143	34	105	0.040	17.5	M20
P932	212	180_{h6}	17	75_{k6}	250	10.0	143	34	105	0.040	17.5	M20

Example dimensions for the motor connection + total length

Type	Øb6	Øe6	Ød2max	l5	□a6	c	c6	f6	l7	lg	s6
P231_ME	40^{H7}	63	14	30	55	15	32.0	3.5	3.0	109.5	M5
P232_ME	40^{H7}	63	14	30	55	15	32.0	3.5	3.0	141.5	M5
P331_ME	60^{H7}	75	19	41	75	18	41.5	3.5	4.0	145.5	M5
P332_ME	40^{H7}	63	14	30	55	15	32.0	3.5	3.0	163.0	M5
P431_ME	95^{H7}	115	24	41	100	21	42.5	4.0	3.5	165.5	M8
P432_ME	60^{H7}	75	19	41	75	18	41.5	3.5	4.0	202.5	M5
P531_ME	110^{H7}	130	32	51	120	24	54.0	4.0	4.5	210.5	M8
P532_ME	95^{H7}	115	24	41	100	21	42.5	4.0	3.5	239.5	M8
P731_ME	130^{H7}	165	38	61	150	26	66.0	5.5	4.5	264.5	M10
P732_ME	110^{H7}	130	32	51	120	24	54.0	4.0	4.5	302.5	M8
P831_ME	180^{H7}	215	48	83	204	35	80.5	5.5	8.5	311.5	M12
P832_ME	130^{H7}	165	38	61	150	26	66.0	5.5	4.5	356.5	M10
P931_ME	180^{H7}	215	60	85	230	43	91.5	6.0	10.5	382.5	M12
P932_ME	180^{H7}	215	48	83	204	35	80.5	5.5	8.5	463.5	M12

In the table above, you will find example dimensions for the motor connection for the ME motor adapter. **Note that when dimension c is lengthened (depending on the motor used), dimensions c6, l5 and lg are also lengthened accordingly.**

You will find additional motor connection dimensions for motor adapters ME, MEL, MF and MFL in our STOBER Configurator at http://configurator.stoeber.de. Here, you can directly download a 3D model of your drive.

2.3.2 P shaft design (solid shaft with feather key)

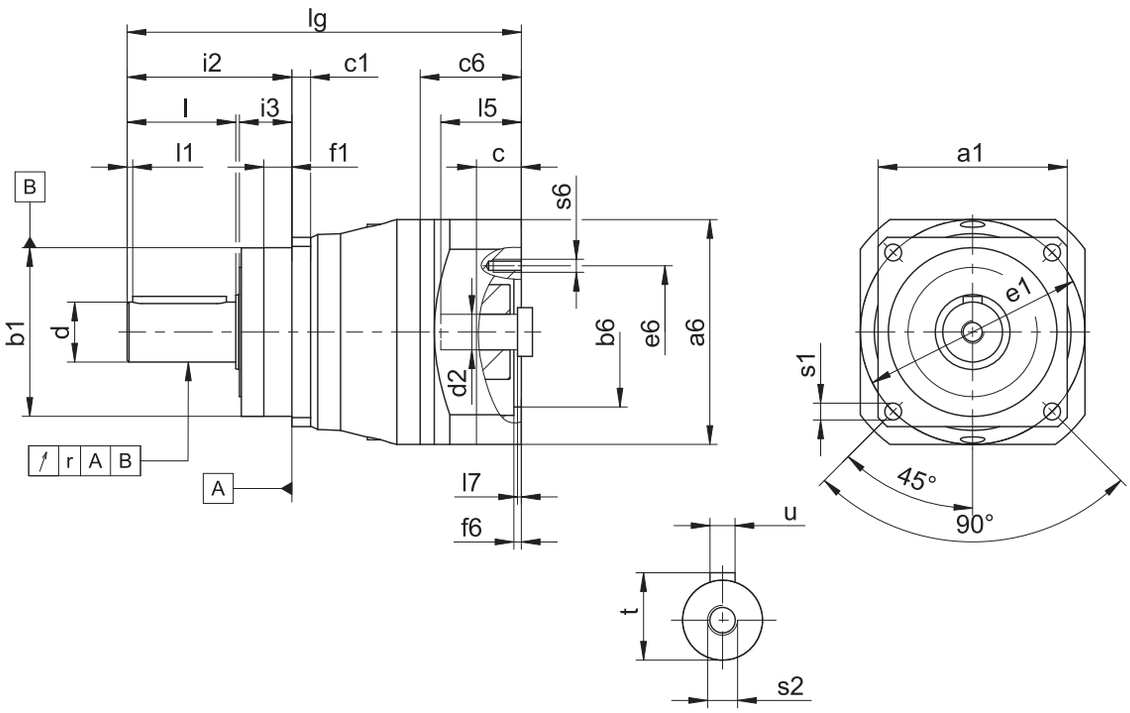

– The radial runout specification applies only to the reinforced bearing D.

Dimensions of gear units

Type	□a1	Øb1	c1	Ød	Øe1	f1	i2	i3	l	l1	r	Øs1	s2	t	u
P231	55	50_{h6}	6	12_{k6}	63	7.0	36	12	22	2	–	5.5	M4	13.5	A4×4×18
P232	55	50_{h6}	6	12_{k6}	63	7.0	36	12	22	2	–	5.5	M4	13.5	A4×4×18
P331	72	60_{h6}	7	16_{k6}	75	7.5	48	18	28	2	0.025	5.5	M5	18.0	A5×5×22
P332	72	60_{h6}	7	16_{k6}	75	7.5	48	18	28	2	0.025	5.5	M5	18.0	A5×5×22
P431	76	70_{h6}	9	22_{k6}	85	7.5	56	18	36	3	0.025	6.6	M8	24.5	A6×6×28
P432	76	70_{h6}	9	22_{k6}	85	7.5	56	18	36	3	0.025	6.6	M8	24.5	A6×6×28
P531	101	90_{h6}	10	32_{k6}	120	15.0	88	28	58	3	0.030	9.0	M12	35.0	A10×8×50
P532	101	90_{h6}	10	32_{k6}	120	15.0	88	28	58	3	0.030	9.0	M12	35.0	A10×8×50
P731	144	130_{h6}	15	40_{k6}	165	3.5	112	27	82	4	0.035	11.0	M16	43.0	A12×8×70
P732	144	130_{h6}	15	40_{k6}	165	3.5	112	27	82	4	0.035	11.0	M16	43.0	A12×8×70
P831	190	160_{h6}	15	55_{k6}	215	10.0	112	27	82	6	0.035	13.5	M20	59.0	A16×10×70
P832	190	160_{h6}	15	55_{k6}	215	10.0	112	27	82	6	0.035	13.5	M20	59.0	A16×10×70
P931	212	180_{h6}	17	75_{k6}	250	10.0	143	34	105	7	0.040	17.5	M20	79.5	A20×12×90
P932	212	180_{h6}	17	75_{k6}	250	10.0	143	34	105	7	0.040	17.5	M20	79.5	A20×12×90

Example dimensions for the motor connection + total length

Type	Øb6	Øe6	Ød2max	l5	□a6	c	c6	f6	l7	lg	s6
P231_ME	40^{H7}	63	14	30	55	15	32.0	3.5	3.0	109.5	M5
P232_ME	40^{H7}	63	14	30	55	15	32.0	3.5	3.0	141.5	M5
P331_ME	60^{H7}	75	19	41	75	18	41.5	3.5	4.0	145.5	M5
P332_ME	40^{H7}	63	14	30	55	15	32.0	3.5	3.0	163.0	M5
P431_ME	95^{H7}	115	24	41	100	21	42.5	4.0	3.5	165.5	M8
P432_ME	60^{H7}	75	19	41	75	18	41.5	3.5	4.0	202.5	M5
P531_ME	110^{H7}	130	32	51	120	24	54.0	4.0	4.5	210.5	M8
P532_ME	95^{H7}	115	24	41	100	21	42.5	4.0	3.5	239.5	M8
P731_ME	130^{H7}	165	38	61	150	26	66.0	5.5	4.5	264.5	M10
P732_ME	110^{H7}	130	32	51	120	24	54.0	4.0	4.5	302.5	M8
P831_ME	180^{H7}	215	48	83	204	35	80.5	5.5	8.5	311.5	M12
P832_ME	130^{H7}	165	38	61	150	26	66.0	5.5	4.5	356.5	M10
P931_ME	180^{H7}	215	60	85	230	43	91.5	6.0	10.5	382.5	M12
P932_ME	180^{H7}	215	48	83	204	35	80.5	5.5	8.5	463.5	M12

In the table above, you will find example dimensions for the motor connection for the ME motor adapter. **Note that when dimension c is lengthened (depending on the motor used), dimensions c6, l5 and lg are also lengthened accordingly.**

You will find additional motor connection dimensions for motor adapters ME, MEL, MF and MFL in our STOBER Configurator at http://configurator.stoeber.de. Here, you can directly download a 3D model of your drive.

2.4 Type designation

In this chapter, you can find an explanation of the type designation with the associated options.

Additional ordering information not included in the type designation can be found at the end of the chapter.

Example code

P	4	3	1	S	G	S	S	0100	ME

Explanation

Code	Designation	Design
P	Type	Planetary gear unit
4	Size	4 (example)
3	Generation	Generation 3
1	Stages	Single-stage
2		Two-stage
S	Housing	Standard
G	Shaft	Solid shaft without feather key
P		Solid shaft with feather key
S	Bearing	Standard bearing
D		Axially reinforced bearing (P3 – P9)
Z		Radially reinforced bearing (P3 – P9)[1]
S	Backlash	Standard
R		Reduced
0100	Transmission ratio (i x 10)	i = 10 (example)
ME	Motor adapter	Motor adapter with EasyAdapt coupling
MEL		Motor adapter with EasyAdapt coupling for large motors
MF		Motor adapter with FlexiAdapt coupling
MFL		Motor adapter with FlexiAdapt coupling for large motors
MB[2]		ServoStop motor adapter with brake

In order to complete the type designation, also specify:

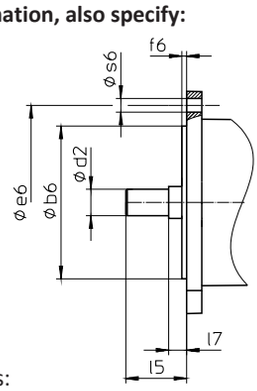

- Motor type or motor dimensions:

  To choose a suitable motor connection, use the STOBER Configurator at http://configurator.stoeber.de and choose your motor or the dimensions of the motor connection.
- Radial shaft seal rings at the output made of NBR or FKM (option), see the chapter [▸ 2.6.4]
- Reverse operation of the output shaft from ±20° to ±90° and horizontal installation, note the chapter [▸ 2.6.5]
- P5 – P9: Double seal for motor adapter (optional)
- Socket wrench insert for mounting the motor on the gear unit using the ME/MEL/MF/MFL motor adapter (optional)

[1] Not for reduced-backlash option.

[2] You can find more details in the catalog for ServoStop servo gear unit with brake ID 443234.

2.4.1 Nameplate

An example gear unit nameplate is explained in the figure below.

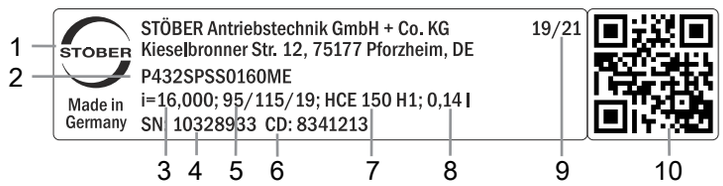

Code	Designation
1	Name of manufacturer
2	Type designation
3	Gear ratio of the gear unit
4	Serial number of the gear unit
5	Dimensions of the motor adapter (diameter of pilot/bolt circle/motor shaft)
6	Customer-specific data
7	Lubricant specification
8	Lubricant fill volume
9	Date of manufacture (year/calendar week)
10	QR code (link to product information)

2.4.1.1 Supporting documents

You can view or download supporting documents for the product by reading off the serial number on the nameplate of the product and entering it at the following address online:
https://id.stober.com

Alternatively, you can use a suitable mobile device to scan in the QR code on the nameplate of the product in order to be linked to the supporting documents.

2.5 Product description

2.5.1 Input options

Motor adapter for attaching synchronous servo motors

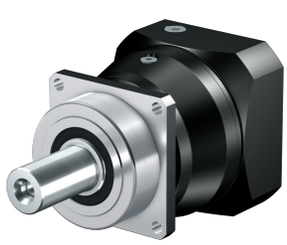

http://www.stoeber.de/en/PME

MB motor adapter with brake for attaching synchronous servo motors

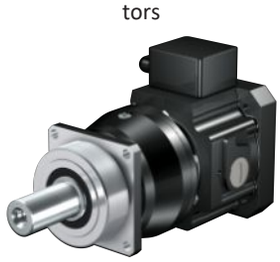

http://www.stoeber.de/en/PMB

EZ synchronous servo motor

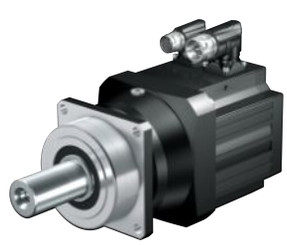

http://www.stoeber.de/en/PEZ

LM Lean motor

http://www.stoeber.de/en/PLM

2.5.2 Motor adapter with EasyAdapt coupling (ME/MEL)

In this chapter, you will find a description of the EasyAdapt coupling.

Properties:

- Fast and easy motor attachment
- One-piece, rugged clamp coupling with expanding function
- Lowest mass moments of inertia for the highest dynamics
- Balanced for smooth running without vibration, even at high speeds
- Large motor shaft diameter range
- Error-free, thanks to exact centering of the motor
- For reduced backlash, the motor shaft bearing must have an axially backlash-free design

Fig. 1: EasyAdapt coupling

2.5.3 Motor adapter with FlexiAdapt coupling (MF/MFL)

In this chapter, you will find a description of the FlexiAdapt coupling.

Properties:

- Fast and easy motor attachment
- Rugged, laser-welded bellow coupling with expanding function
- With integrated thermal length compensation, compensates for linear expansion of the motor shaft
- Motor shaft decoupled from axial forces
- Balanced for smooth running without vibration, even at high speeds
- Large motor shaft diameter range
- Error-free, thanks to exact centering of the motor

Fig. 2: FlexiAdapt coupling

2.5.4 Installation conditions

The specified torques and forces only apply when gear units are fastened on the machine side using screws of strength class 12.9. In addition, the gear housings must be adjusted at the pilot. The machine-side fit must be H7.

2.5.5 Lubricants

STOBER fills the gear units with the amount and type of lubricant specified on the nameplate.

You will receive lubricants for use in the food industry upon request.

2.5.6 Other product features

Feature	Value
Max. permitted gear unit temperature (on the surface of the gear unit)	≤ 90 °C
Paint	Black RAL 9005
Explosion-proof design in accordance with (ATEX) Directive 2014/34/EU (optional)	Available, see Document ID 441677_en
Efficiency:	
η_{get} single-stage	97%
η_{get} two-stage	95%
Protection class: [3]	IP65

2.5.7 Direction of rotation

The input and output rotate in the same direction.

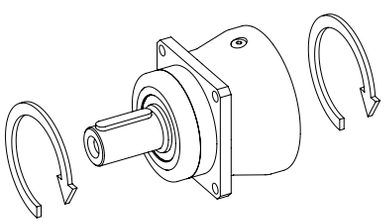

2.6 Project configuration

Project your drives using our SERVOsoft designing software. Download SERVOsoft for free at https://www.stoeber.de/en/ServoSoft.

Observe the limit conditions in this chapter to ensure a safe design for your drives.

An explanation of the formula symbols can be found in the chapter [▸ 18.1].

[3] Observe the protection class of all the components.

2.6.1 Drive selection

The formula symbols for values actually present in the application are marked with *.

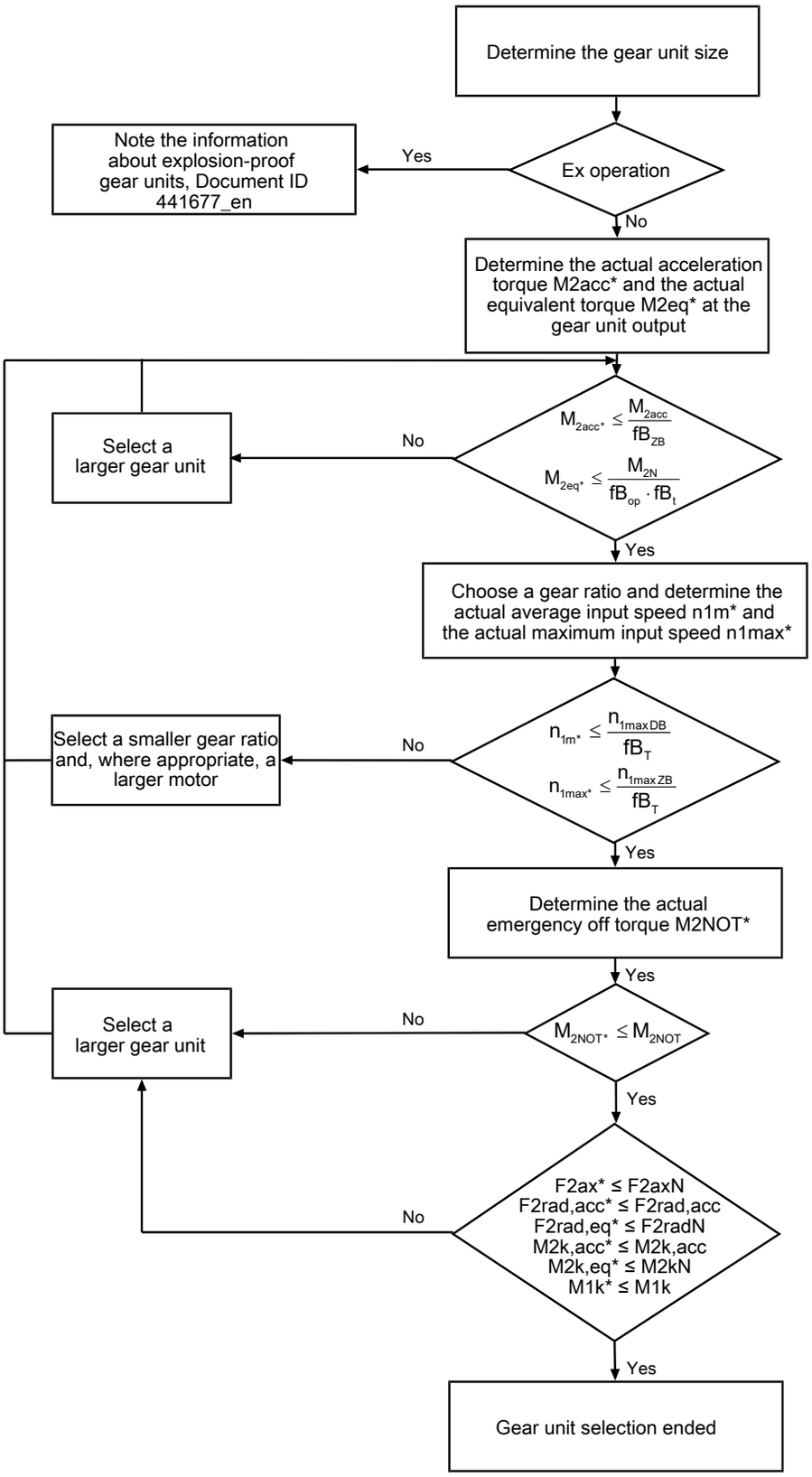

Calculate the forces and tilting torques in the chapter Permitted shaft loads.

Refer to the selection tables for the values for i, n_{1maxDB}, n_{1maxZB}, M_{2acc} (M_{2accHT} for reduced backlash), M_{2NOT} and M_{2N}.

The values for fB_T, fB_{op}, fB_t and fB_{ZB} can be found in the corresponding tables in this chapter.

Example of cyclic operation

The following calculations are based on a representation of the power taken from the output based in accordance with the following example:

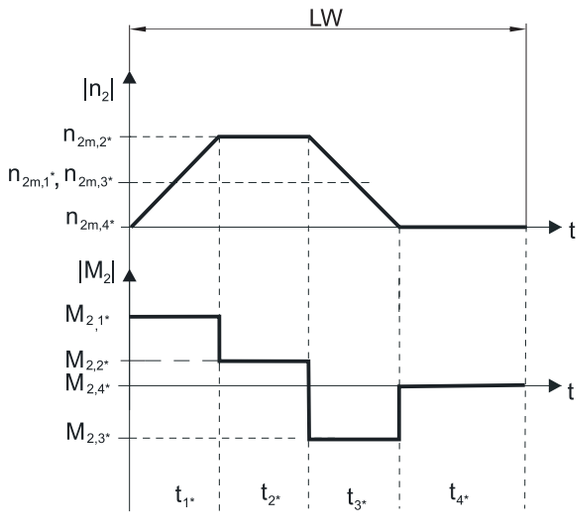

Calculation of the actual maximum acceleration torque

$$M_{2acc*} = J_{tot} \cdot \frac{\Delta n_2}{9.55 \cdot \Delta t} + M_{L*}$$

Calculation of the actual average input speed

$$n_{1m*} = n_{2m*} \cdot i$$

$$n_{2m*} = \frac{|n_{2m,1*}| \cdot t_{1*} + \ldots + |n_{2m,n*}| \cdot t_{n*}}{t_{1*} + \ldots + t_{n*}}$$

If $t_{1*} + \ldots + t_{3*} \geq 6$ min, calculate n_{2m*} without the rest phase t_{4*}.

The values for the ratio i can be found in the selection tables.

Calculation of the actual emergency-off torque

$$M_{2NOT*} = J_{tot} \cdot \frac{\Delta n_2}{9.55 \cdot \Delta t} + M_{L*}$$

Calculation of the actual equivalent torque

$$M_{2eq*} = \sqrt[3]{\frac{|n_{2m,1*}| \cdot t_{1*} \cdot |M_{2,1*}{}^3| + \ldots + |n_{2m,n*}| \cdot t_{n*} \cdot |M_{2,n*}{}^3|}{|n_{2m,1*}| \cdot t_{1*} + \ldots + |n_{2m,n*}| \cdot t_{n*}}}$$

Operating factors

Operating mode	fB_{op}
Uniform continuous operation	1.00
Cyclic operation	1.00
Reversing load cyclic operation	1.00

Run time	fB_t
Daily runtime ≤ 8 h	1.00
Daily runtime ≤ 16 h	1.15
Daily runtime ≤ 24 h	1.20

Cyclic operation	fB_{ZB}
≤ 1000 load changes/hour (LW/h)	1.00
> 1000 load changes/hour (LW/h)	1.15

Temperature		fB_T
Motor cooling	**Surrounding temperature**	
Motor with forced ventilation	≤ 20 °C	0.9
	≤ 30 °C	1.0
	≤ 40 °C	1.15
Motor with convection cooling	≤ 20 °C	1.0
	≤ 30 °C	1.1
	≤ 40 °C	1.25

Notes

- The maximum permitted gear unit temperature of ≤ 90 °C must not be exceeded. Doing so may result in damage to the gear unit.

2.6.2 Permitted shaft loads for the output shaft

The values specified in the tables apply to the permitted shaft loads:

- For shaft dimensions in accordance with the catalog
- For output speeds n_{2m*} ≤ 100 rpm ($F^{2axN} = F_{2ax100}$; $F_{2radN} = F_{2rad100}$; $M_{2kN} = M_{2k100}$)
- Only if radial forces on the gear unit are stabilized by its pilots (housing, flange shaft)

Permitted shaft loads for standard bearing S

Type	z_2 [mm]	F_{2ax100} [N]	$F_{2rad100}$ [N]	$F_{2rad,acc}$ [N]	M_{2k100} [Nm]	$M_{2k,acc}$ [Nm]
P2	17.0	500	1200	1300	34	36
P3	17.5	1000	2500	2500	79	79
P4	18.5	1500	4000	4500	146	164
P5	19.5	2300	6500	7000	315	340
P7	23.0	2900	8500	9000	544	576
P8	24.5	4700	13000	18000	852	1179
P9	33.0	6000	18000	27000	1539	2309

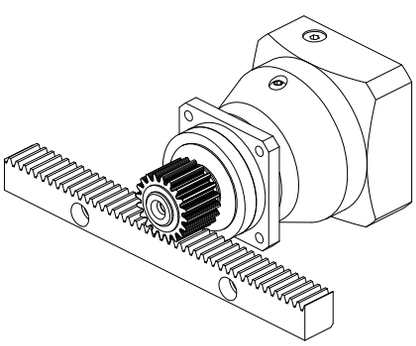

Fig. 3: Recommendation for bearing assignment S (e.g. for straight-cut gearing)

Permitted shaft loads for axially reinforced bearing D

Type	z_2 [mm]	F_{2ax100} [N]	$F_{2rad100}$ [N]	$F_{2rad,acc}$ [N]	M_{2k100} [Nm]	$M_{2k,acc}$ [Nm]
P3	20.0	2500	2750	2750	94	94
P4	22.5	4000	4500	5000	182	203
P5	25.5	6000	7000	8000	382	436
P7	29.0	10000	9500	10000	665	700
P8	32.0	15500	15000	18000	1095	1314
P9	44.0	25000	20000	30000	1930	2895

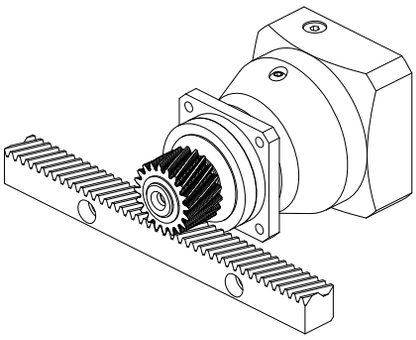

Fig. 4: Recommendation for bearing assignment D (e.g. for helical gearing)

Permitted shaft loads for radially reinforced bearing Z

Type	z_2 [mm]	F_{2ax100} [N]	$F_{2rad100}$ [N]	$F_{2rad,acc}$ [N]	M_{2k100} [Nm]	$M_{2k,acc}$ [Nm]
P3	17.5	600	3000	3000	95	95
P4	18.5	1000	5000	5000	183	183
P5	19.5	1600	8000	8000	388	388
P7	23.0	2000	10000	10000	640	640
P8	24.5	3600	18000	18000	1179	1179
P9	33.0	5000	27000	35000	2309	2993

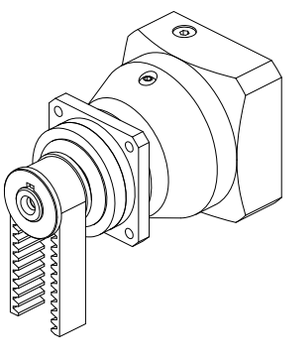

Fig. 5: Recommendation for bearing assignment Z (e.g. for belt drives)

For other output speeds, download diagrams at http://configurator.stoeber.de.

The following applies to output speeds n_{2m*} > 100 rpm:

$$F_{2axN} = \frac{F_{2ax100}}{\sqrt[3]{\frac{n_{2m*}}{100\ \text{rpm}}}} \qquad F_{2radN} = \frac{F_{2rad100}}{\sqrt[3]{\frac{n_{2m*}}{100\ \text{rpm}}}} \qquad M_{2kN} = \frac{M_{2k100}}{\sqrt[3]{\frac{n_{2m*}}{100\ \text{rpm}}}}$$

The values for F_{2ax100}, $F_{2rad100}$ and M_{2k100} can be found in the table "Permitted shaft loads" in this chapter.

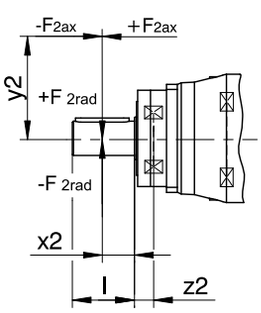

Fig. 6: Force application points

The specified values for $F_{2rad100}$ and $F_{2rad,acc}$ refer to an application of force at the center of the output shaft: $x_2 = l/2$.

Shaft dimensions can be found in the "Dimensional drawings" chapter.

The following applies to other force application points:

$$M_{2k,acc*} = \frac{2 \cdot F_{2ax*} \cdot y_2 + F_{2rad,acc*} \cdot (x_2 + z_2)}{1000} \leq M_{2k,acc}$$

$$F_{2rad,acc*} \leq F_{2rad,acc}$$

$$F_{2ax*} \leq F_{2axN}$$

The values for $F_{2rad,acc}$ and $M_{2k,acc}$ can be found in the table "Permitted shaft loads" in this chapter.

For applications with multiple axial and/or radial forces, you must add the forces as vectors.

In the event of EMERGENCY OFF operation (max. 1000 load changes), you can multiply the permitted forces and torques for F_{2ax100}, $F_{2rad100}$ and M_{2k100} by a factor of two.

Also note the calculation for equivalent values:

$$M_{2k,eq*} = \sqrt[3]{\frac{|n_{2m,1*}| \cdot t_{1*} \cdot |M_{2k,acc,1*}{}^3| + \ldots + |n_{2m,n*}| \cdot t_{n*} \cdot |M_{2k,acc,n*}{}^3|}{|n_{2m,1*}| \cdot t_{1*} + \ldots + |n_{2m,n*}| \cdot t_{n*}}} \leq M_{2kN}$$

$$F_{2rad,eq*} = \sqrt[3]{\frac{|n_{2m,1*}| \cdot t_{1*} \cdot |F_{2rad,acc,1*}{}^3| + \ldots + |n_{2m,n*}| \cdot t_{n*} \cdot |F_{2rad,acc,n*}{}^3|}{|n_{2m,1*}| \cdot t_{1*} + \ldots + |n_{2m,n*}| \cdot t_{n*}}} \leq F_{2radN}$$

The following apply to the bearing service life L_{10h} ($ED_{10} \leq 40\%$):

$L_{10h} > 10000$ h with $1 < M_{2kN}/M_{2k*} < 1.25$

$L_{10h} > 20000$ h with $1.25 < M_{2kN}/M_{2k*} < 1.5$

$L_{10h} > 30000$ h with $1.5 < M_{2kN}/M_{2k*}$

For different duty cycles:

$$L_{10h} > L_{10h(ED_{10}=40\%)} \cdot \frac{40\%}{ED_{10}}$$

2.6.3 Permitted breakdown torques at the gear unit input

For a horizontal mounting position of the motor, verify that the permitted breakdown torque at the gear unit input is not exceeded before installation on a STOBER gear unit. You can find information for how to do that in this chapter.

Calculate the actual breakdown torque as follows:

$M_{1k*} = F_{1k*} \bullet l_{sp} \leq M_{1k}$

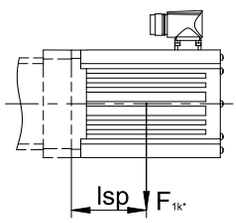

Type	M_{1k} [Nm]
P231_ME	10
P232_ME	10
P331_ME	20
P332_ME	10
P431_ME	40
P432_ME	20
P531_ME	80
P532_ME	40
P731_ME	200
P732_ME	80
P831_ME	400
P832_ME	200
P931_ME	800
P932_ME	400

The values also apply to the MEL, MF and MFL motor adapters.

2.6.4 Recommendation for radial shaft seal rings

For a duty cycle > 60% and higher surrounding temperatures, we recommend radial shaft seal rings made of FKM at the output.

Properties:

- Excellent temperature resistance
- High chemical stability
- Very good resistance to aging
- Excellent resistance in oils and greases
- For use in the food, beverage and pharmaceutical industries

Leak-proofness

Our gear units are equipped with high-quality radial shaft seal rings and checked for leaks. However, a leak cannot be fully ruled out over the length of use of a gear unit. If you use a gear unit with goods incompatible with the lubricant, you must take measures to prevent direct contact with the gear unit lubricant in case of a leak.

2.6.5 Reverse operation

To ensure lubrication for circulating gearing parts during cyclic reverse operation from ± 20° to ± 90° at the output, pay careful attention to the position of the output shaft for the horizontal mounting of the gear unit, as shown in the diagrams below. The images show the center position of reverse operation. Cyclic reverse operation ≤ ± 20° on request.

Solid shaft without feather key	Solid shaft with feather key
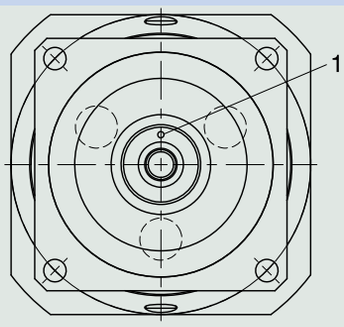	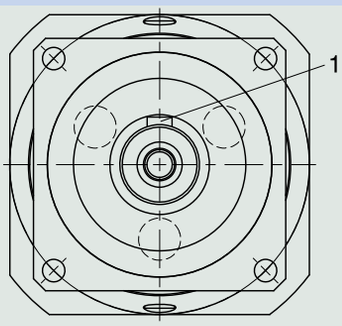
1 Position of the mark: top	1 Position of the feather key: top

Notes

- If you use the solid shaft without a feather key (G), you must note the position of the mark during assembly.
- As an alternative, you can use the solid shaft with a feather key (P). In that case, the feather key functions for position orientation. For a backlash-free connection, also use a clamp.

2.7 Additional documentation

Additional documentation related to the product can be found at
http://www.stoeber.de/en/downloads/

Enter the ID of the documentation in the Search... field.

Documentation	ID
Operating manual for P/PE/PH/PHQ/PHV planetary gear units and planetary geared motors	443149_en
Operating manual for explosion-proof P/PA/PE/PH/PHA/PHQ/PHQA/PHV/PHVA planetary gear units	443030_en
Information explosion-proof gear units	441677_en

3 PH planetary gear units

Table of contents

3.1 Overview 38

3.2 Selection tables 39

3.3 Dimensional drawings 42

3.4 Type designation 44

3.4.1 Type designation PH3 – PH8 44

3.4.2 Type designation PH9 – PH10 45

3.4.3 Nameplate 46

3.5 Product description 46

3.5.1 Input options 46

3.5.2 Motor adapter with EasyAdapt coupling (ME/MEL) 47

3.5.3 Motor adapter with FlexiAdapt coupling (MF/MFL) 47

3.5.4 Installation conditions 47

3.5.5 Lubricants 48

3.5.6 Other product features 48

3.5.7 Direction of rotation 48

3.6 Project configuration 48

3.6.1 Drive selection 49

3.6.2 Permitted shaft loads for the output shaft 51

3.6.3 Permitted breakdown torques at the gear unit input 53

3.6.4 Recommendation for radial shaft seal rings 53

3.6.5 Reverse operation 54

3.7 Additional documentation 54

3 Planetary gear units PH

3.1 Overview

High-performance precision planetary gear units

Features

Power density	★★★★☆
Backlash	★★★★★
Price category	€€€
Shaft load	★★★★★
Smooth operation	★★★★☆
Torsional stiffness	★★★★☆
Mass moment of inertia	★★★★☆
Helical gearing	✓
Maintenance-free	✓
Any mounting position	✓
Continuous operation without cooling	✓
Stiff output bearings due to pretension	✓
Reinforced output bearing (PH3 – PH5)	✓ (optional)
Easy and reliable attachment to any synchronous servo motor	✓

Key ★☆☆☆☆ good | ★★★★★ excellent
€ Economy | €€€€€ Premium

Technical data

i	4 – 100
M_{2acc}	60 – 7500 Nm
$\Delta\phi_2$	1 – 4 arcmin
η_{get}	93 – 96 %

3.2 Selection tables

The technical data specified in the selection tables applies to:

- Installation altitudes up to 1000 m above sea level
- Surrounding temperatures from 0 °C to 40 °C
- Without consideration for thermal limiting performance

You can find the mass moment of inertia J_1 for smaller motor shaft diameters and all other technical data at http://configurator.stoeber.de.

In the case of the version with a reinforced bearing and gear ratios ≤ 5, the maximum permitted input speed n_{1maxZB} is reduced. You can find values at http://configurator.stoeber.de

An explanation of the formula symbols can be found in the chapter [▸ 18.1].

i	Type	n_{1MAXDB} [rpm]	n_{1MAXZB} [rpm]	d_{MW} [mm]	J_1 [kgcm²]	m [kg]	$\Delta\varphi_2$ [arcmin]	$\Delta\varphi_{2red}$ [arcmin]	C_2 [Nm/arcmin]	L_{pA} [dB(A)]	M_{2N} [Nm]	M_{2acc} [Nm]	M_{2accHT} [Nm]	M_{2NOT} [Nm]
PH331 ($M_{2acc,max}$ = 85 Nm)														
5.000	PH331_0050 ME	4000	8000	≤19	0.46	1.8	4.0	2.0	15	58	45	80	85	160
5.000	PH331_0050 MEL	4000	8000	≤24	0.89	2.2	4.0	2.0	15	58	45	80	85	160
7.000	PH331_0070 ME	5000	8000	≤19	0.42	1.8	4.0	2.0	12	57	45	75	77	150
7.000	PH331_0070 MEL	5000	8000	≤24	0.85	2.2	4.0	2.0	12	57	45	75	77	150
10.00	PH331_0100 ME	5500	8000	≤19	0.40	1.8	4.0	2.0	9.1	55	36	60	60	120
10.00	PH331_0100 MEL	5500	8000	≤24	0.83	2.2	4.0	2.0	9.1	55	36	60	60	120
PH332 ($M_{2acc,max}$ = 85 Nm)														
20.00	PH332_0200 ME	5500	8000	≤14	0.14	2.0	4.0	2.0	14	59	45	80	85	160
20.00	PH332_0200 MEL	5500	8000	≤19	0.43	2.4	4.0	2.0	14	59	45	80	85	160
25.00	PH332_0250 ME	6000	8000	≤14	0.12	2.0	4.0	2.0	14	57	50	80	85	160
25.00	PH332_0250 MEL	6000	8000	≤19	0.41	2.4	4.0	2.0	14	57	50	80	85	160
28.00	PH332_0280 ME	6000	8000	≤14	0.14	2.0	4.0	2.0	12	59	50	75	75	150
28.00	PH332_0280 MEL	6000	8000	≤19	0.43	2.4	4.0	2.0	12	59	50	75	75	150
35.00	PH332_0350 ME	6000	8000	≤14	0.12	2.0	4.0	2.0	14	56	50	80	85	160
35.00	PH332_0350 MEL	6000	8000	≤19	0.41	2.4	4.0	2.0	14	56	50	80	85	160
40.00	PH332_0400 ME	6000	8000	≤14	0.13	2.0	4.0	2.0	9.0	59	50	67	67	134
40.00	PH332_0400 MEL	6000	8000	≤19	0.42	2.4	4.0	2.0	9.0	59	50	67	67	134
50.00	PH332_0500 ME	6000	8000	≤14	0.12	2.0	4.0	2.0	12	54	50	75	75	150
50.00	PH332_0500 MEL	6000	8000	≤19	0.41	2.4	4.0	2.0	12	54	50	75	75	150
70.00	PH332_0700 ME	6000	8000	≤14	0.10	2.0	4.0	2.0	11	54	53	69	69	138
70.00	PH332_0700 MEL	6000	8000	≤19	0.39	2.4	4.0	2.0	11	54	53	69	69	138
100.0	PH332_1000 ME	6000	8000	≤14	0.10	2.0	4.0	2.0	8.9	54	46	60	60	120
100.0	PH332_1000 MEL	6000	8000	≤19	0.39	2.4	4.0	2.0	8.9	54	46	60	60	120
PH431 ($M_{2acc,max}$ = 189 Nm)														
4.000	PH431_0040 ME	2600	5000	≤24	1.3	4.0	3.0	1.0	36	61	90	136	189	273
4.000	PH431_0040 MEL	2600	5000	≤32	2.9	4.8	3.0	1.0	36	61	90	136	189	273
5.000	PH431_0050 ME	3000	6000	≤24	1.1	4.0	3.0	1.0	35	59	90	172	189	344
5.000	PH431_0050 MEL	3000	6000	≤32	2.7	4.8	3.0	1.0	35	59	90	172	189	344
7.000	PH431_0070 ME	3200	6000	≤24	0.99	4.0	3.0	1.0	30	58	90	160	175	320
7.000	PH431_0070 MEL	3200	6000	≤32	2.6	4.8	3.0	1.0	30	58	90	160	175	320
10.00	PH431_0100 ME	3500	7000	≤24	0.91	4.0	3.0	1.0	21	56	75	115	115	230
10.00	PH431_0100 MEL	3500	7000	≤32	2.5	4.8	3.0	1.0	21	56	75	115	115	230
PH432 ($M_{2acc,max}$ = 174 Nm)														
16.00	PH432_0160 ME	4000	8000	≤19	0.52	4.8	3.0	1.0	31	60	90	160	173	312
16.00	PH432_0160 MEL	4000	8000	≤24	0.95	5.2	3.0	1.0	31	60	90	160	173	312
20.00	PH432_0200 ME	4000	8000	≤19	0.47	4.8	3.0	1.0	31	60	95	150	150	299
20.00	PH432_0200 MEL	4000	8000	≤24	0.90	5.2	3.0	1.0	31	60	95	150	150	299
25.00	PH432_0250 ME	4500	8000	≤19	0.47	4.8	3.0	1.0	32	58	100	161	174	322
25.00	PH432_0250 MEL	4500	8000	≤24	0.90	5.2	3.0	1.0	32	58	100	161	174	322
28.00	PH432_0280 ME	4500	8000	≤19	0.50	4.8	3.0	1.0	31	57	95	160	173	312
28.00	PH432_0280 MEL	4500	8000	≤24	0.93	5.2	3.0	1.0	31	57	95	160	173	312
35.00	PH432_0350 ME	4500	8000	≤19	0.46	4.8	3.0	1.0	32	57	110	160	174	320
35.00	PH432_0350 MEL	4500	8000	≤24	0.89	5.2	3.0	1.0	32	57	110	160	174	320
40.00	PH432_0400 ME	4500	8000	≤19	0.50	4.8	3.0	1.0	30	55	110	155	169	310
40.00	PH432_0400 MEL	4500	8000	≤24	0.92	5.2	3.0	1.0	30	55	110	155	169	310
50.00	PH432_0500 ME	4500	8000	≤19	0.46	4.8	3.0	1.0	31	55	120	159	174	318
50.00	PH432_0500 MEL	4500	8000	≤24	0.89	5.2	3.0	1.0	31	55	120	159	174	318
70.00	PH432_0700 ME	4500	8000	≤19	0.42	4.8	3.0	1.0	27	55	120	158	164	316
70.00	PH432_0700 MEL	4500	8000	≤24	0.85	5.2	3.0	1.0	27	55	120	158	164	316
100.0	PH432_1000 ME	4500	8000	≤19	0.40	4.8	3.0	1.0	20	55	85	110	110	220
100.0	PH432_1000 MEL	4500	8000	≤24	0.83	5.2	3.0	1.0	20	55	85	110	110	220

i	Type	n_{1MAXDB} [rpm]	n_{1MAXZB} [rpm]	d_{MW} [mm]	J_1 [kgcm²]	m [kg]	$\Delta\varphi_2$ [arcmin]	$\Delta\varphi_{2red}$ [arcmin]	C_2 [Nm/arcmin]	L_{pA} [dB(A)]	M_{2N} [Nm]	M_{2acc} [Nm]	M_{2accHT} [Nm]	M_{2NOT} [Nm]
PH531 ($M_{2acc,max}$ = 400 Nm)														
4.000	PH531_0040 ME	2200	5000	≤32	4.1	6.6	3.0	1.0	90	62	210	355	387	696
4.000	PH531_0040 MEL	2200	5000	≤38	7.7	7.7	3.0	1.0	91	62	210	355	387	696
5.000	PH531_0050 ME	2500	5500	≤32	3.5	6.6	3.0	1.0	91	60	220	385	400	705
5.000	PH531_0050 MEL	2500	5500	≤38	7.1	7.7	3.0	1.0	91	60	220	385	400	705
7.000	PH531_0070 ME	3000	6000	≤32	3.1	6.6	3.0	1.0	75	59	210	370	387	705
7.000	PH531_0070 MEL	3000	6000	≤38	6.6	7.7	3.0	1.0	75	59	210	370	387	705
10.00	PH531_0100 ME	3300	6500	≤32	2.8	6.6	3.0	1.0	53	57	180	288	288	575
10.00	PH531_0100 MEL	3300	6500	≤38	6.3	7.7	3.0	1.0	53	57	180	288	288	575
PH532 ($M_{2acc,max}$ = 400 Nm)														
16.00	PH532_0160 ME	3500	7000	≤24	1.2	7.9	3.0	1.0	82	61	230	355	355	696
16.00	PH532_0160 MEL	3500	7000	≤32	2.8	8.8	3.0	1.0	82	61	230	355	355	696
20.00	PH532_0200 ME	3500	7000	≤24	1.1	7.9	3.0	1.0	85	61	250	370	387	705
20.00	PH532_0200 MEL	3500	7000	≤32	2.7	8.8	3.0	1.0	85	61	250	370	387	705
25.00	PH532_0250 ME	3700	7500	≤24	1.0	7.9	3.0	1.0	84	59	260	385	400	705
25.00	PH532_0250 MEL	3700	7500	≤32	2.7	8.8	3.0	1.0	84	59	260	385	400	705
28.00	PH532_0280 ME	4000	8000	≤24	1.1	7.9	3.0	1.0	79	58	240	355	387	696
28.00	PH532_0280 MEL	4000	8000	≤32	2.7	8.8	3.0	1.0	80	58	240	355	387	696
35.00	PH532_0350 ME	4000	8000	≤24	1.0	7.9	3.0	1.0	84	58	290	385	400	705
35.00	PH532_0350 MEL	4000	8000	≤32	2.6	8.8	3.0	1.0	84	58	290	385	400	705
40.00	PH532_0400 ME	4000	8000	≤24	1.1	7.9	3.0	1.0	74	56	260	355	356	696
40.00	PH532_0400 MEL	4000	8000	≤32	2.7	8.8	3.0	1.0	74	56	260	355	356	696
50.00	PH532_0500 ME	4000	8000	≤24	1.0	7.9	3.0	1.0	79	56	296	385	400	705
50.00	PH532_0500 MEL	4000	8000	≤32	2.6	8.8	3.0	1.0	79	56	296	385	400	705
70.00	PH532_0700 ME	4000	8000	≤24	0.93	7.9	3.0	1.0	70	56	284	370	387	705
70.00	PH532_0700 MEL	4000	8000	≤32	2.5	8.8	3.0	1.0	70	56	284	370	387	705
100.0	PH532_1000 ME	4000	8000	≤24	0.88	7.9	3.0	1.0	52	56	221	288	288	575
100.0	PH532_1000 MEL	4000	8000	≤32	2.5	8.8	3.0	1.0	52	56	221	288	288	575
PH731 ($M_{2acc,max}$ = 924 Nm)														
4.000	PH731_0040 ME	1900	4000	≤38	12	12	3.0	1.0	207	63	440	840	924	1321
4.000	PH731_0040 MEL	1900	4000	≤48	22	16	3.0	1.0	219	63	440	840	924	1680
5.000	PH731_0050 ME	2200	5000	≤38	9.5	12	3.0	1.0	190	61	440	882	924	1651
5.000	PH731_0050 MEL	2200	5000	≤48	20	16	3.0	1.0	196	61	440	882	924	1720
7.000	PH731_0070 ME	2500	5000	≤38	8.0	12	3.0	1.0	160	60	440	869	869	1720
7.000	PH731_0070 MEL	2500	5000	≤48	18	16	3.0	1.0	162	60	440	869	869	1720
10.00	PH731_0100 ME	2500	5000	≤38	7.2	12	3.0	1.0	123	58	350	575	575	1150
10.00	PH731_0100 MEL	2500	5000	≤48	17	16	3.0	1.0	123	58	350	575	575	1150
PH732 ($M_{2acc,max}$ = 908 Nm)														
16.00	PH732_0160 ME	3000	6000	≤32	3.8	15	3.0	1.0	200	62	450	740	740	1480
16.00	PH732_0160 MEL	3000	6000	≤38	7.3	16	3.0	1.0	200	62	450	740	740	1480
20.00	PH732_0200 ME	3000	6000	≤32	3.4	15	3.0	1.0	186	62	460	805	845	1610
20.00	PH732_0200 MEL	3000	6000	≤38	6.9	16	3.0	1.0	186	62	460	805	845	1610
25.00	PH732_0250 ME	3500	7000	≤32	3.3	15	3.0	1.0	185	60	500	866	908	1720
25.00	PH732_0250 MEL	3500	7000	≤38	6.8	16	3.0	1.0	185	60	500	866	908	1720
28.00	PH732_0280 ME	3700	7000	≤32	3.6	15	3.0	1.0	194	59	540	770	880	1540
28.00	PH732_0280 MEL	3700	7000	≤38	7.1	16	3.0	1.0	194	59	540	770	880	1540
35.00	PH732_0350 ME	3700	7000	≤32	3.2	15	3.0	1.0	183	59	540	866	908	1720
35.00	PH732_0350 MEL	3700	7000	≤38	6.7	16	3.0	1.0	183	59	540	866	908	1720
40.00	PH732_0400 ME	3700	7000	≤32	3.5	15	3.0	1.0	182	57	540	770	770	1540
40.00	PH732_0400 MEL	3700	7000	≤38	7.1	16	3.0	1.0	182	57	540	770	770	1540
50.00	PH732_0500 ME	3700	7000	≤32	3.2	15	3.0	1.0	176	57	600	830	834	1660
50.00	PH732_0500 MEL	3700	7000	≤38	6.7	16	3.0	1.0	176	57	600	830	834	1660
70.00	PH732_0700 ME	3700	7000	≤32	2.9	15	3.0	1.0	154	57	600	809	847	1617
70.00	PH732_0700 MEL	3700	7000	≤38	6.4	16	3.0	1.0	154	57	600	809	847	1617
100.0	PH732_1000 ME	3700	7000	≤32	2.7	15	3.0	1.0	121	57	423	550	550	1100
100.0	PH732_1000 MEL	3700	7000	≤38	6.2	16	3.0	1.0	121	57	423	550	550	1100
PH831 ($M_{2acc,max}$ = 2300 Nm)														
4.000	PH831_0040 ME	1400	3500	≤48	44	31	3.0	1.0	512	64	880	1820	2112	2408
4.000	PH831_0040 MEL	1400	3500	≤60	72	36	3.0	1.0	553	64	880	1820	2112	3639
5.000	PH831_0050 ME	1600	4000	≤48	33	31	3.0	1.0	534	62	1100	2100	2300	3010
5.000	PH831_0050 MEL	1600	4000	≤60	62	36	3.0	1.0	561	62	1100	2100	2300	4200
7.000	PH831_0070 ME	2000	4000	≤48	26	31	3.0	1.0	441	61	1000	2000	2112	4000
7.000	PH831_0070 MEL	2000	4000	≤60	54	36	3.0	1.0	450	61	1000	2000	2112	4000
10.00	PH831_0100 ME	2200	4000	≤48	22	31	3.0	1.0	338	59	850	1392	1392	2784
10.00	PH831_0100 MEL	2200	4000	≤60	50	36	3.0	1.0	341	59	850	1392	1392	2784

i	Type	n_{1MAXDB} [rpm]	n_{1MAXZB} [rpm]	d_{MW} [mm]	J_1 [kgcm²]	m [kg]	$\Delta\varphi_2$ [arcmin]	$\Delta\varphi_{2red}$ [arcmin]	C_2 [Nm/arcmin]	L_{pA} [dB(A)]	M_{2N} [Nm]	M_{2acc} [Nm]	M_{2accHT} [Nm]	M_{2NOT} [Nm]
PH832 ($M_{2acc,max}$ = 2300 Nm)														
16.00	PH832_0160 ME	2500	4500	≤38	11	36	3.0	1.0	490	63	1100	2000	2200	4000
16.00	PH832_0160 MEL	2500	4500	≤48	22	40	3.0	1.0	494	63	1100	2000	2200	4000
20.00	PH832_0200 ME	2500	4500	≤38	9.4	36	3.0	1.0	518	63	1250	2100	2300	4200
20.00	PH832_0200 MEL	2500	4500	≤48	20	40	3.0	1.0	521	63	1250	2100	2300	4200
25.00	PH832_0250 ME	2700	5500	≤38	9.0	36	3.0	1.0	516	61	1300	2100	2300	4200
25.00	PH832_0250 MEL	2700	5500	≤48	19	40	3.0	1.0	518	61	1300	2100	2300	4200
28.00	PH832_0280 ME	3000	6000	≤38	10	36	3.0	1.0	477	60	1100	2000	2000	4000
28.00	PH832_0280 MEL	3000	6000	≤48	20	40	3.0	1.0	478	60	1100	2000	2000	4000
35.00	PH832_0350 ME	3000	6000	≤38	8.7	36	3.0	1.0	509	60	1450	2100	2300	4200
35.00	PH832_0350 MEL	3000	6000	≤48	19	40	3.0	1.0	509	60	1450	2100	2300	4200
40.00	PH832_0400 ME	3000	6000	≤38	9.9	36	3.0	1.0	452	58	1100	1920	1936	3840
40.00	PH832_0400 MEL	3000	6000	≤48	20	40	3.0	1.0	452	58	1100	1920	1936	3840
50.00	PH832_0500 ME	3000	6000	≤38	8.5	36	3.0	1.0	490	58	1557	2100	2300	4200
50.00	PH832_0500 MEL	3000	6000	≤48	19	40	3.0	1.0	490	58	1557	2100	2300	4200
70.00	PH832_0700 ME	3000	6000	≤38	7.5	36	3.0	1.0	425	58	1422	1848	1936	3696
70.00	PH832_0700 MEL	3000	6000	≤48	18	40	3.0	1.0	425	58	1422	1848	1936	3696
100.0	PH832_1000 ME	3000	6000	≤38	6.9	36	3.0	1.0	333	58	1062	1380	1380	2760
100.0	PH832_1000 MEL	3000	6000	≤48	17	40	3.0	1.0	333	58	1062	1380	1380	2760
PH932 ($M_{2acc,max}$ = 5000 Nm)														
12.00	PH932_0120 ME	1800	3000	≤48	67	71	3.0	–	1110	66	3000	4608	–	6743
12.00	PH932_0120 MEL	1800	3000	≤60	103	75	3.0	–	1201	66	3000	4608	–	6743
16.00	PH932_0160 ME	2200	3500	≤48	37	71	3.0	–	1139	64	3000	5000	–	8956
16.00	PH932_0160 MEL	2200	3500	≤60	73	75	3.0	–	1191	64	3000	5000	–	8956
18.00	PH932_0180 ME	1800	3000	≤48	61	71	3.0	–	1084	66	3000	4500	–	9000
18.00	PH932_0180 MEL	1800	3000	≤60	97	75	3.0	–	1120	66	3000	4500	–	9000
20.00	PH932_0200 ME	2500	4000	≤48	29	71	3.0	–	1142	62	3000	5000	–	10000
20.00	PH932_0200 MEL	2500	4000	≤60	66	75	3.0	–	1175	62	3000	5000	–	10000
24.00	PH932_0240 ME	2200	3500	≤48	34	71	3.0	–	1096	64	3000	4500	–	9000
24.00	PH932_0240 MEL	2200	3500	≤60	70	75	3.0	–	1116	64	3000	4500	–	9000
28.00	PH932_0280 ME	2800	4500	≤48	21	71	3.0	–	1121	61	3000	5000	–	10000
28.00	PH932_0280 MEL	2800	4500	≤55	54	75	3.0	–	1140	61	3000	5000	–	10000
30.00	PH932_0300 ME	2500	4000	≤48	27	71	3.0	–	1097	62	3000	4500	–	9000
30.00	PH932_0300 MEL	2500	4000	≤60	64	75	3.0	–	1110	62	3000	4500	–	9000
32.00	PH932_0320 ME	2800	4500	≤48	20	71	3.0	–	1093	60	3000	4608	–	9216
32.00	PH932_0320 MEL	2800	4500	≤55	53	75	3.0	–	1107	60	3000	4608	–	9216
40.00	PH932_0400 ME	2800	4500	≤48	18	71	3.0	–	1046	59	2688	4608	–	9216
40.00	PH932_0400 MEL	2800	4500	≤55	50	75	3.0	–	1054	59	2688	4608	–	9216
42.00	PH932_0420 ME	2800	4500	≤48	20	71	3.0	–	1088	61	3000	4500	–	9000
42.00	PH932_0420 MEL	2800	4500	≤55	53	75	3.0	–	1096	61	3000	4500	–	9000
48.00	PH932_0480 ME	2800	4500	≤48	19	71	3.0	–	1076	60	3000	4500	–	9000
48.00	PH932_0480 MEL	2800	4500	≤55	52	75	3.0	–	1082	60	3000	4500	–	9000
60.00	PH932_0600 ME	2800	4500	≤48	17	71	3.0	–	1055	59	3000	4500	–	9000
60.00	PH932_0600 MEL	2800	4500	≤55	50	75	3.0	–	1059	59	3000	4500	–	9000
PH1032 ($M_{2acc,max}$ = 7500 Nm)														
18.00	PH1032_0180 ME	1800	3000	≤48	64	86	3.0	–	1656	66	4608	6912	–	10115
18.00	PH1032_0180 MEL	1800	3000	≤60	101	91	3.0	–	1743	66	4608	6912	–	10115
24.00	PH1032_0240 ME	2200	3500	≤48	36	86	3.0	–	1684	64	4608	7500	–	13434
24.00	PH1032_0240 MEL	2200	3500	≤60	72	91	3.0	–	1733	64	4608	7500	–	13434
30.00	PH1032_0300 ME	2500	4000	≤48	28	86	3.0	–	1686	62	5000	7500	–	15000
30.00	PH1032_0300 MEL	2500	4000	≤60	65	91	3.0	–	1718	62	5000	7500	–	15000
42.00	PH1032_0420 ME	2800	4500	≤48	21	86	3.0	–	1666	61	5000	7500	–	15000
42.00	PH1032_0420 MEL	2800	4500	≤55	53	91	3.0	–	1685	61	5000	7500	–	15000
48.00	PH1032_0480 ME	2800	4500	≤48	20	86	3.0	–	1638	60	4608	6912	–	13824
48.00	PH1032_0480 MEL	2800	4500	≤55	52	91	3.0	–	1652	60	4608	6912	–	13824
60.00	PH1032_0600 ME	2800	4500	≤48	18	86	3.0	–	1591	59	4032	6912	–	13824
60.00	PH1032_0600 MEL	2800	4500	≤55	50	91	3.0	–	1599	59	4032	6912	–	13824

3.3 Dimensional drawings

In this chapter, you can find the dimensions of the gear units as well as example dimensions of the mountable motor adapters.

Dimensions can exceed the specifications of ISO 2768-mK due to casting tolerances or accumulation of individual tolerances.

We reserve the right to make dimensional changes due to ongoing technical development.

You can download 3D models of our standard drives at http://configurator.stoeber.de.

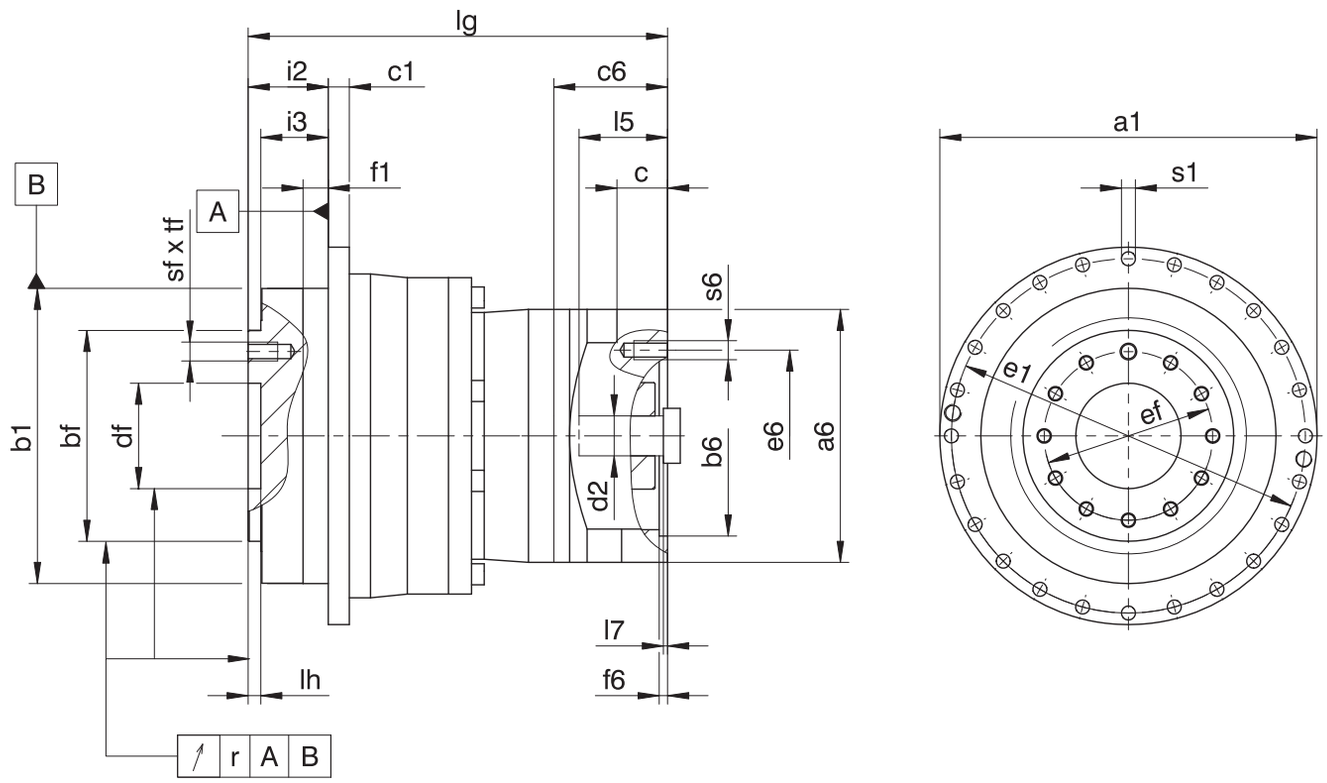

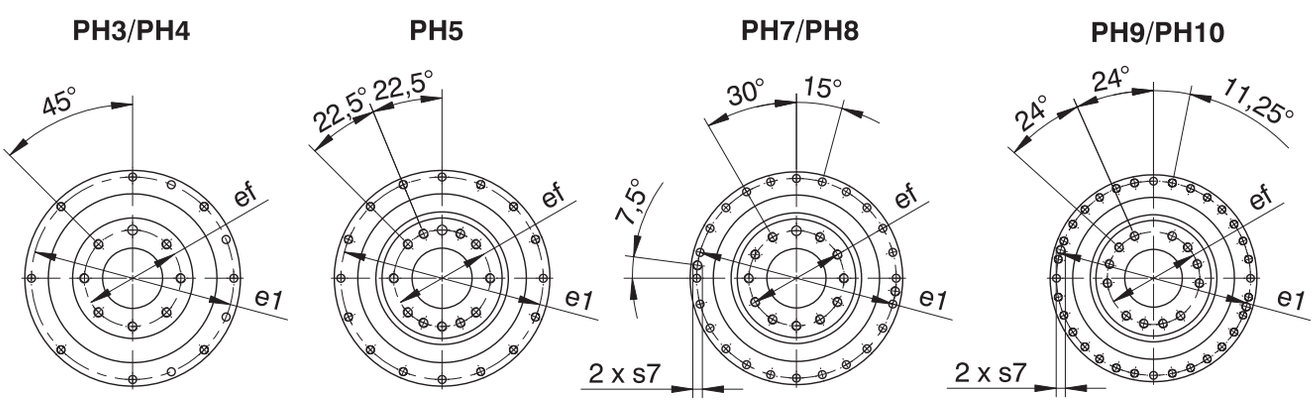

Dimensions of gear units

Type	Øa1	Øb1	Øbf	c1	Ødf	Øe1	Øef	f1	i2	i3	lh	r	Øs1	s7	sf	tf
PH331	86	64_{h7}	40_{h7}	4	20.0^{H6}	79	31.5	7	19.5	16.5	4	0.020	4.5	–	M5	7
PH332	86	64_{h7}	40_{h7}	4	20.0^{H6}	79	31.5	7	19.5	16.5	4	0.020	4.5	–	M5	7
PH431	118	90_{h7}	63_{h7}	7	31.5^{H6}	109	50.0	10	30.0	24.0	6	0.020	5.5	–	M6	11
PH432	118	90_{h7}	63_{h7}	7	31.5^{H6}	109	50.0	10	30.0	24.0	6	0.020	5.5	–	M6	11
PH531	145	110_{h7}	80_{h7}	8	40.0^{H6}	135	63.0	12	29.0	23.0	6	0.020	5.5	–	M6	11
PH532	145	110_{h7}	80_{h7}	8	40.0^{H6}	135	63.0	12	29.0	23.0	6	0.020	5.5	–	M6	11
PH731	179	140_{h7}	100_{h7}	10	50.0^{H6}	168	80.0	12	38.0	32.0	6	0.025	6.6	–	M8	14
PH732	179	140_{h7}	100_{h7}	10	50.0^{H6}	168	80.0	12	38.0	32.0	6	0.025	6.6	–	M8	14
PH831	247	200_{h7}	160_{h7}	12	80.0^{H6}	233	125.0	15	50.0	42.0	8	0.030	9.0	M10	M10	18
PH832	247	200_{h7}	160_{h7}	12	80.0^{H6}	233	125.0	15	50.0	42.0	8	0.030	9.0	M10	M10	18
PH932	300	255_{h7}	180_{h7}	18	90.0^{H6}	280	140.0	20	66.0	55.0	12	0.030	13.5	M8	M16	24
PH1032	330	285_{h7}	200_{h7}	20	95.0^{H6}	310	160.0	20	75.0	60.0	10	0.040	13.5	M10	M20	30

Example dimensions for the motor connection + total length

Type	Øb6	Øe6	Ød2max	l5	□a6	c	c6	f6	l7	lg	s6
PH331_ME	60^{H7}	75	19	41	75	18	41.5	3.5	4.0	98.5	M5
PH332_ME	40^{H7}	63	14	30	55	15	32.0	3.5	3.0	116.0	M5
PH431_ME	95^{H7}	115	24	41	100	21	42.5	4.0	3.5	113.5	M8
PH432_ME	60^{H7}	75	19	41	75	18	41.5	3.5	4.0	150.5	M5
PH531_ME	110^{H7}	130	32	51	120	24	54.0	4.0	4.5	132.0	M8
PH532_ME	95^{H7}	115	24	41	100	21	42.5	4.0	3.5	161.0	M8
PH731_ME	130^{H7}	165	38	61	150	26	66.0	5.5	4.5	161.0	M10
PH732_ME	110^{H7}	130	32	51	120	24	54.0	4.0	4.5	199.0	M8
PH831_ME	180^{H7}	215	48	83	204	35	80.5	5.5	8.5	218.0	M12
PH832_ME	130^{H7}	165	38	61	150	26	66.0	5.5	4.5	263.0	M10
PH932_ME	180^{H7}	215	48	82	204	35	94.0	5.5	5.5	384.5	M12
PH1032_ME	180^{H7}	215	48	82	204	35	94.0	5.5	5.5	401.0	M12

In the table above, you will find example dimensions for the motor connection for the ME motor adapter. **Note that when dimension c is lengthened (depending on the motor used), dimensions c6, l5 and lg are also lengthened accordingly.**

You will find additional motor connection dimensions for motor adapters ME, MEL, MF and MFL in our STOBER Configurator at http://configurator.stoeber.de. Here, you can directly download a 3D model of your drive.

3.4 Type designation

3.4.1 Type designation PH3 – PH8

In this chapter, you can find an explanation of the type designation for sizes PH3 – PH8 with the associated options.

Additional ordering information not included in the type designation can be found at the end of the chapter.

Example code

PH	5	3	2	S	F	S	S	0250	ME

Explanation

Code	Designation	Design
PH	Type	Planetary gear unit
5	Size	5 (example)
3	Generation	Generation 3
1 **2**	Stages	Single-stage Two-stage
S	Housing	Standard
F	Shaft	Flange shaft
S V	Bearing	Standard bearing Reinforced bearing (PH3 – PH5)
S R	Backlash	Standard Reduced
0250	Transmission ratio (i x 10)	i = 25 (example)
ME MEL MF MFL MB[1]	Motor adapter	Motor adapter with EasyAdapt coupling Motor adapter with EasyAdapt coupling for large motors Motor adapter with FlexiAdapt coupling Motor adapter with FlexiAdapt coupling for large motors ServoStop motor adapter with brake

In order to complete the type designation, also specify:

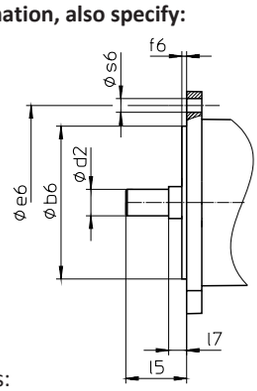

- Motor type or motor dimensions:

  To choose a suitable motor connection, use the STOBER Configurator at http://configurator.stoeber.de and choose your motor or the dimensions of the motor connection.
- Radial shaft seal rings at the output made of NBR or FKM (option), see the chapter [▸ 3.6.4]
- Reverse operation of the output shaft from ±20° to ±90° and horizontal installation, note the chapter [▸ 3.6.5]
- PH5 – PH8: Double seal for motor adapter (optional)
- Socket wrench insert for mounting the motor on the gear unit using the ME/MEL/MF/MFL motor adapter (optional)

[1] You can find more details in the catalog for ServoStop servo gear unit with brake ID 443234.

3.4.2 Type designation PH9 – PH10

In this chapter, you can find an explanation of the type designation for sizes PH9 – PH10 with the associated options.

Additional ordering information not included in the type designation can be found at the end of the chapter.

Example code

PH	9	3	2	F	0200	ME

Explanation

Code	Designation	Design
PH	Type	Planetary gear unit
9	Size	9 (example)
3	Generation	Generation 3
2	Stages	Two-stage
F	Shaft	Flange shaft
0200	Transmission ratio (i x 10)	i = 20 (example)
ME	Motor adapter	Motor adapter with EasyAdapt coupling
MEL		Motor adapter with EasyAdapt coupling for large motors
MB[2]		ServoStop motor adapter with brake

In order to complete the type designation, also specify:

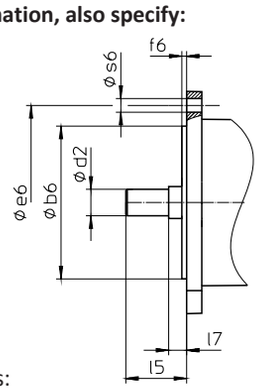

- Motor type or motor dimensions:

  To choose a suitable motor connection, use the STOBER Configurator at http://configurator.stoeber.de and choose your motor or the dimensions of the motor connection.
- Radial shaft seal rings at the output made of NBR or FKM (option), see the chapter [▸ 3.6.4]
- Reverse operation of the output shaft from ±20° to ±90° and horizontal installation, note the chapter [▸ 3.6.5]
- Socket wrench insert for mounting the motor on the gear unit using the ME/MEL motor adapter (optional)

[2] You can find more details in the catalog for ServoStop servo gear unit with brake ID 443234.

3.4.3 Nameplate

An example gear unit nameplate is explained in the figure below.

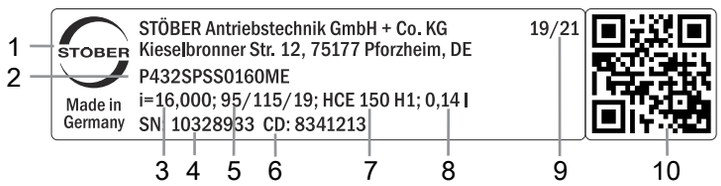

Code	Designation
1	Name of manufacturer
2	Type designation
3	Gear ratio of the gear unit
4	Serial number of the gear unit
5	Dimensions of the motor adapter (diameter of pilot/bolt circle/motor shaft)
6	Customer-specific data
7	Lubricant specification
8	Lubricant fill volume
9	Date of manufacture (year/calendar week)
10	QR code (link to product information)

3.4.3.1 Supporting documents

You can view or download supporting documents for the product by reading off the serial number on the nameplate of the product and entering it at the following address online:
https://id.stober.com

Alternatively, you can use a suitable mobile device to scan in the QR code on the nameplate of the product in order to be linked to the supporting documents.

3.5 Product description

3.5.1 Input options

Motor adapter for attaching synchronous servo motors

http://www.stoeber.de/en/PHME

MB motor adapter with brake for attaching synchronous servo motors

http://www.stoeber.de/en/PHMB

EZ synchronous servo motor

http://www.stoeber.de/en/PHEZ

3.5.2 Motor adapter with EasyAdapt coupling (ME/MEL)

In this chapter, you will find a description of the EasyAdapt coupling.

Properties:

- Fast and easy motor attachment
- One-piece, rugged clamp coupling with expanding function
- Lowest mass moments of inertia for the highest dynamics
- Balanced for smooth running without vibration, even at high speeds
- Large motor shaft diameter range
- Error-free, thanks to exact centering of the motor
- For reduced backlash, the motor shaft bearing must have an axially backlash-free design

Fig. 1: EasyAdapt coupling

3.5.3 Motor adapter with FlexiAdapt coupling (MF/MFL)

In this chapter, you will find a description of the FlexiAdapt coupling.

Properties:

- Fast and easy motor attachment
- Rugged, laser-welded bellow coupling with expanding function
- With integrated thermal length compensation, compensates for linear expansion of the motor shaft
- Motor shaft decoupled from axial forces
- Balanced for smooth running without vibration, even at high speeds
- Large motor shaft diameter range
- Error-free, thanks to exact centering of the motor

Fig. 2: FlexiAdapt coupling

3.5.4 Installation conditions

The torque and force values listed in this catalog are valid under the following conditions:

- When the flange shaft and gear housing are fastened on the machine side using screws of strength class 12.9
- When the gear housings are adjusted at pilot øb1. The machine-side fit must be H7.
- When the flange shaft is adjusted using the connecting element at pilot øbf or ødf

3.5.5 Lubricants

STOBER fills the gear units with the amount and type of lubricant specified on the nameplate.

You will receive lubricants for use in the food industry upon request.

3.5.6 Other product features

Feature	Value
Max. permitted gear unit temperature (on the surface of the gear unit)	≤ 90 °C
Paint	Black RAL 9005
Explosion-proof design in accordance with (ATEX) Directive 2014/34/EU (optional)	Available, see Document ID 441677_en
Efficiency:	
η_{get} single-stage	96%
η_{get} two-stage	93%
Protection class: [3]	IP65

3.5.7 Direction of rotation

The input and output rotate in the same direction.

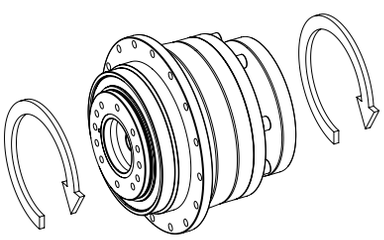

3.6 Project configuration

Project your drives using our SERVOsoft designing software. Download SERVOsoft for free at https://www.stoeber.de/en/ServoSoft.

Observe the limit conditions in this chapter to ensure a safe design for your drives.

An explanation of the formula symbols can be found in the chapter [▸ 18.1].

[3] Observe the protection class of all the components.

3.6.1 Drive selection

The formula symbols for values actually present in the application are marked with *.

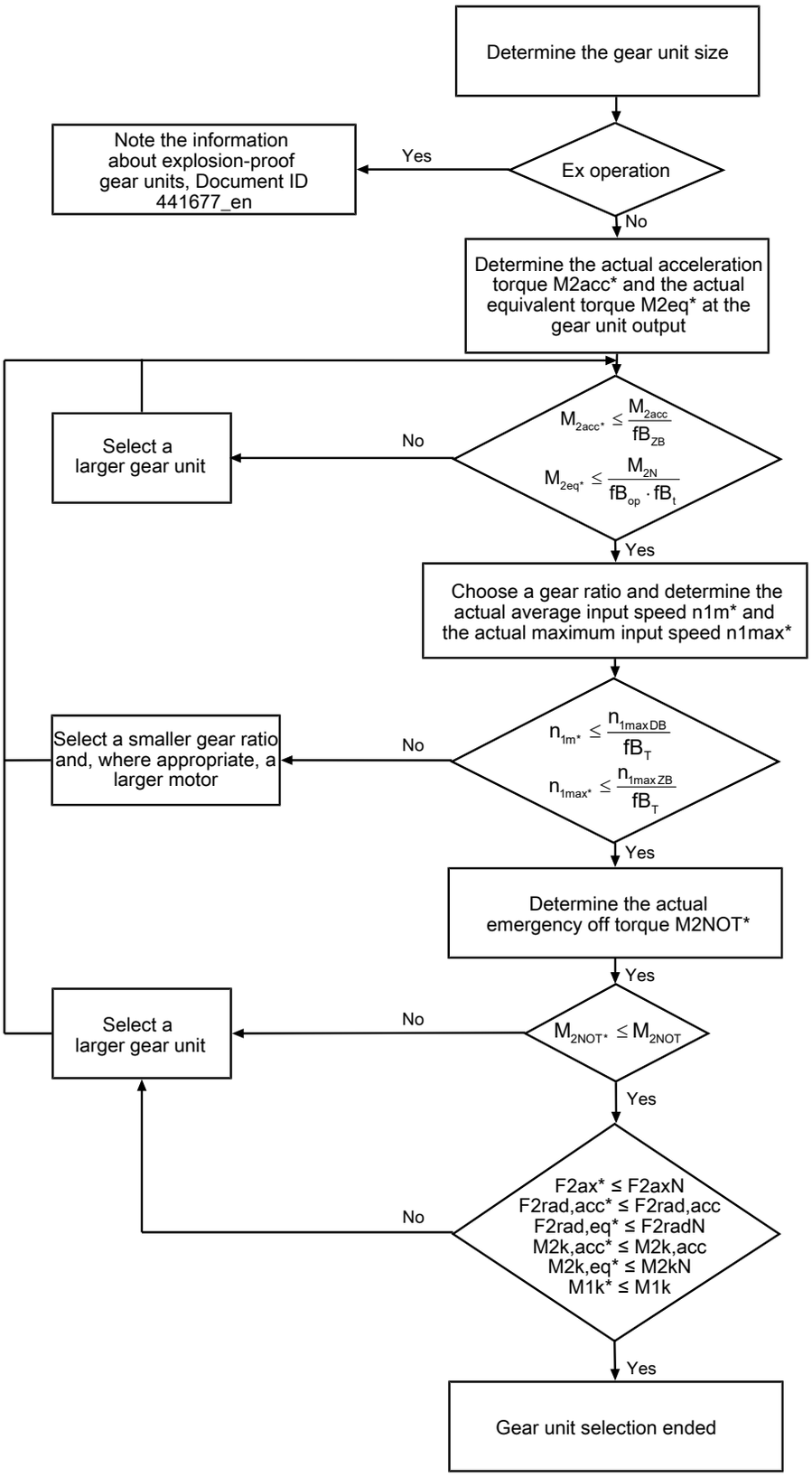

Calculate the forces and tilting torques in the chapter Permitted shaft loads.

Refer to the selection tables for the values for i, n_{1maxDB}, n_{1maxZB}, M_{2acc} (M_{2accHT} for reduced backlash), M_{2NOT} and M_{2N}.

The values for fB_T, fB_{op}, fB_t and fB_{ZB} can be found in the corresponding tables in this chapter.

Example of cyclic operation

The following calculations are based on a representation of the power taken from the output based in accordance with the following example:

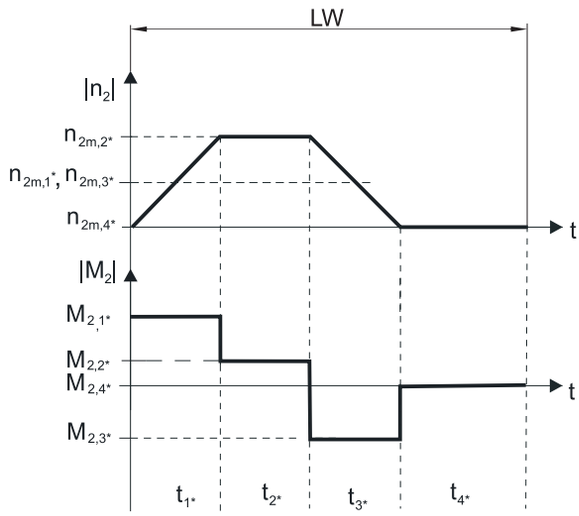

Calculation of the actual maximum acceleration torque

$$M_{2acc*} = J_{tot} \cdot \frac{\Delta n_2}{9.55 \cdot \Delta t} + M_{L*}$$

Calculation of the actual average input speed

$$n_{1m*} = n_{2m*} \cdot i$$

$$n_{2m*} = \frac{|n_{2m,1*}| \cdot t_{1*} + \ldots + |n_{2m,n*}| \cdot t_{n*}}{t_{1*} + \ldots + t_{n*}}$$

If $t_{1*} + \ldots + t_{3*} \geq 6$ min, calculate n_{2m*} without the rest phase t_{4*}.

The values for the ratio i can be found in the selection tables.

Calculation of the actual emergency-off torque

$$M_{2NOT*} = J_{tot} \cdot \frac{\Delta n_2}{9.55 \cdot \Delta t} + M_{L*}$$

Calculation of the actual equivalent torque

$$M_{2eq*} = \sqrt[3]{\frac{|n_{2m,1*}| \cdot t_{1*} \cdot |M_{2,1*}{}^3| + \ldots + |n_{2m,n*}| \cdot t_{n*} \cdot |M_{2,n*}{}^3|}{|n_{2m,1*}| \cdot t_{1*} + \ldots + |n_{2m,n*}| \cdot t_{n*}}}$$

Operating factors

Operating mode	fB_{op}
Uniform continuous operation	1.00
Cyclic operation	1.00
Reversing load cyclic operation	1.00

Run time	fB_t
Daily runtime ≤ 8 h	1.00
Daily runtime ≤ 16 h	1.15
Daily runtime ≤ 24 h	1.20

Cyclic operation	fB_{ZB}
≤ 1000 load changes/hour (LW/h)	1.00
> 1000 load changes/hour (LW/h)	1.15

Temperature		fB_T
Motor cooling	**Surrounding temperature**	
Motor with forced ventilation	≤ 20 °C	0.9
	≤ 30 °C	1.0
	≤ 40 °C	1.15
Motor with convection cooling	≤ 20 °C	1.0
	≤ 30 °C	1.1
	≤ 40 °C	1.25

Notes

- The maximum permitted gear unit temperature of ≤ 90 °C must not be exceeded. Doing so may result in damage to the gear unit.

3.6.2 Permitted shaft loads for the output shaft

The values specified in the tables apply to the permitted shaft loads:

- For shaft dimensions in accordance with the catalog
- For output speeds n_{2m*} ≤ 100 rpm ($F^{2axN} = F_{2ax100}$; $F_{2radN} = F_{2rad100}$; $M_{2kN} = M_{2k100}$)
- Only if radial forces on the gear unit are stabilized by its pilots (housing, flange shaft)

Permitted shaft loads for standard bearing S

Type	z_2 [mm]	F_{2ax100} [N]	$F_{2rad100}$ [N]	$F_{2rad,acc}$ [N]	M_{2k100} [Nm]	$M_{2k,acc}$ [Nm]	C_{2k} [Nm/arcmin]
PH3	62.5	1650	1613	1613	101	101	75
PH4	83.0	2150	3095	3571	257	296	192
PH5	97.0	4150	4536	4897	440	475	429
PH7	86.0	6150	17045	17045	1466	1466	500
PH8	125.5	10050	27778	27778	3486	3486	1550
PH9	155.0	33000	48387	70968	7500	11000	7500
PH10	171.0	50000	51462	73099	8800	12500	9500

Permitted shaft loads for reinforced bearing V

Type	z_2 [mm]	F_{2ax100} [N]	$F_{2rad100}$ [N]	$F_{2rad,acc}$ [N]	M_{2k100} [Nm]	$M_{2k,acc}$ [Nm]	C_{2k} [Nm/arcmin]
PH3	66.5	2200	2250	2250	150	150	80
PH4	88.5	2900	4000	4000	354	354	217
PH5	104.0	5000	5500	5500	572	572	478

For other output speeds, download diagrams at http://configurator.stoeber.de.

The following applies to output speeds n_{2m*} > 100 rpm:

$$F_{2axN} = \frac{F_{2ax100}}{\sqrt[3]{\frac{n_{2m*}}{100\ \text{rpm}}}} \qquad F_{2radN} = \frac{F_{2rad100}}{\sqrt[3]{\frac{n_{2m*}}{100\ \text{rpm}}}} \qquad M_{2kN} = \frac{M_{2k100}}{\sqrt[3]{\frac{n_{2m*}}{100\ \text{rpm}}}}$$

The values for F_{2ax100}, $F_{2rad100}$ and M_{2k100} can be found in the table "Permitted shaft loads" in this chapter.

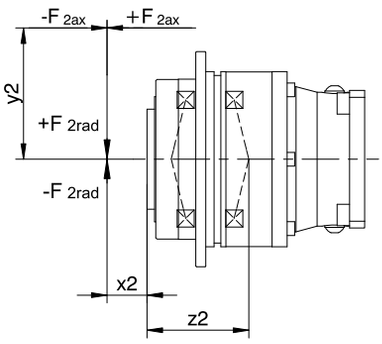

Fig. 3: Force application points

You can determine the permitted radial forces from the permitted breakdown torque M_{2kN} and $M_{2k,acc}$. The actual radial forces may not exceed the permitted radial forces. The permitted radial forces pertain to the shaft end (x2 = 0).

$$M_{2k,acc*} = \frac{2 \cdot F_{2ax*} \cdot y_2 + F_{2rad,acc*} \cdot (x_2 + z_2)}{1000} \leq M_{2k,acc}$$

For applications with multiple axial and/or radial forces, you must add the forces as vectors.

In the event of EMERGENCY OFF operation (max. 1000 load changes), you can multiply the permitted forces and torques for F_{2ax100}, $F_{2rad100}$ and M_{2k100} by a factor of two.

Also note the calculation for equivalent values:

$$M_{2k,eq*} = \sqrt[3]{\frac{|n_{2m,1*}| \cdot t_{1*} \cdot |M_{2k,acc,1*}{}^3| + \ldots + |n_{2m,n*}| \cdot t_{n*} \cdot |M_{2k,acc,n*}{}^3|}{|n_{2m,1*}| \cdot t_{1*} + \ldots + |n_{2m,n*}| \cdot t_{n*}}} \leq M_{2kN}$$

$$F_{2rad,eq*} = \sqrt[3]{\frac{|n_{2m,1*}| \cdot t_{1*} \cdot |F_{2rad,acc,1*}{}^3| + \ldots + |n_{2m,n*}| \cdot t_{n*} \cdot |F_{2rad,acc,n*}{}^3|}{|n_{2m,1*}| \cdot t_{1*} + \ldots + |n_{2m,n*}| \cdot t_{n*}}} \leq F_{2radN}$$

$$F_{2ax,eq*} \leq F_{2axN}$$

The following apply to the bearing service life L_{10h} ($ED_{10} \leq 40\%$):

$L_{10h} > 10000$ h with $1 < M_{2kN}/M_{2k*} < 1.25$

$L_{10h} > 20000$ h with $1.25 < M_{2kN}/M_{2k*} < 1.5$

$L_{10h} > 30000$ h with $1.5 < M_{2kN}/M_{2k*}$

For different duty cycles:

$$L_{10h} > L_{10h(ED_{10}=40\%)} \cdot \frac{40\%}{ED_{10}}$$

3.6.3 Permitted breakdown torques at the gear unit input

For a horizontal mounting position of the motor, verify that the permitted breakdown torque at the gear unit input is not exceeded before installation on a STOBER gear unit. You can find information for how to do that in this chapter.

Calculate the actual breakdown torque as follows:

$M_{1k*} = F_{1k*} \bullet l_{sp} \leq M_{1k}$

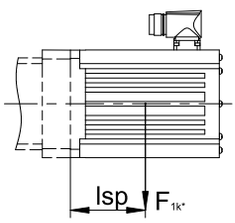

Type	M_{1k} [Nm]
PH331_ME	20
PH332_ME	10
PH431_ME	40
PH432_ME	20
PH531_ME	80
PH532_ME	40
PH731_ME	200
PH732_ME	80
PH831_ME	400
PH832_ME	200
PH932_ME	400
PH1032_ME	400

The values also apply to the MEL, MF and MFL motor adapters.

3.6.4 Recommendation for radial shaft seal rings

For a duty cycle > 60% and higher surrounding temperatures, we recommend radial shaft seal rings made of FKM at the output.

Properties:

- Excellent temperature resistance
- High chemical stability
- Very good resistance to aging
- Excellent resistance in oils and greases
- For use in the food, beverage and pharmaceutical industries

Leak-proofness

Our gear units are equipped with high-quality radial shaft seal rings and checked for leaks. However, a leak cannot be fully ruled out over the length of use of a gear unit. If you use a gear unit with goods incompatible with the lubricant, you must take measures to prevent direct contact with the gear unit lubricant in case of a leak.

3.6.5 Reverse operation

To ensure lubrication for circulating gearing parts during cyclic reverse operation from ± 20° to ± 90° at the output, pay careful attention to the position of the output shaft for the horizontal mounting of the gear unit, as shown in the diagrams below.

The images show the center position of reverse operation.

Cyclic reverse operation ≤ ± 20° on request.

Size 3 – 10

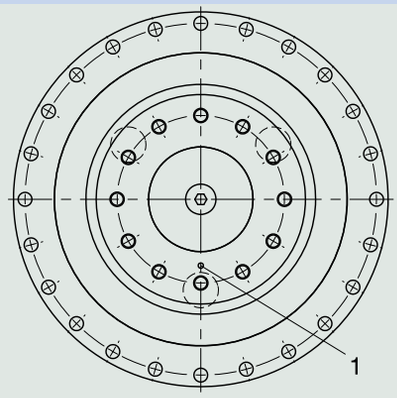

1 Position of the mark: bottom

Please note that the hole pattern may be different, depending on the size of the planetary gear unit.

3.7 Additional documentation

Additional documentation related to the product can be found at
http://www.stoeber.de/en/downloads/

Enter the ID of the documentation in the Search... field.

Documentation	ID
Operating manual for P/PE/PH/PHQ/PHV planetary gear units and planetary geared motors	443149_en
Operating manual for explosion-proof P/PA/PE/PH/PHA/PHQ/PHQA/PHV/PHVA planetary gear units	443030_en
Information explosion-proof gear units	441677_en

4 PHQ planetary gear units

Table of contents

4.1 Overview 56

4.2 Selection tables 57

4.3 Dimensional drawings 60

4.3.1 PHQ4 – PHQ10 F shaft design (flange shaft) 60

4.3.2 PHQ11 – PHQ12 F shaft design (flange shaft) 62

4.4 Type designation 64

4.4.1 Type designation PHQ4 – PHQ8 64

4.4.2 Type designation PHQ9 – PHQ12 65

4.4.3 Nameplate 66

4.5 Product description 66

4.5.1 Input options 66

4.5.2 Motor adapter with EasyAdapt coupling (ME/MEL) 67

4.5.3 Motor adapter with FlexiAdapt coupling (MF/MFL) 67

4.5.4 Installation conditions 68

4.5.5 Mounting positions 68

4.5.6 Lubricants 68

4.5.7 Other product features 68

4.5.8 Direction of rotation 68

4.6 Project configuration 69

4.6.1 Drive selection 69

4.6.2 Permitted shaft loads for the output shaft 71

4.6.3 Permitted breakdown torques at the gear unit input 73

4.6.4 Recommendation for radial shaft seal rings 73

4.6.5 Reverse operation 74

4.7 Additional documentation 74

4 Planetary gear units

PHQ

4.1 Overview

Quattro-Power for maximum power density

Features

Power density	★★★★★
Backlash	★★★★★
Price category	€€€€
Shaft load	★★★★★
Smooth operation	★★★★☆
Torsional stiffness	★★★★★
Mass moment of inertia	★★★★☆
Helical gearing	✓
Maintenance-free	✓
Any mounting position (single/two stage)	✓
High power density	✓
Continuous operation without cooling	✓
Stiff output bearings due to pretension	✓
Reinforced output bearing (PHQ4 – PHQ5)	✓ (optional)
Easy and reliable attachment to any synchronous servo motor	✓

Key ★☆☆☆☆ good | ★★★★★ excellent
€ Economy | €€€€€ Premium

Technical data

i	5.5 – 600
M_{2acc}	200 – 43000 Nm
$\Delta\phi_2$	1 – 3 arcmin
η_{get}	90 – 96 %

4.2 Selection tables

The technical data specified in the selection tables applies to:

- Installation altitudes up to 1000 m above sea level
- Surrounding temperatures from 0 °C to 40 °C
- Without consideration for thermal limiting performance

You can find the mass moment of inertia J_1 for smaller motor shaft diameters and all other technical data at http://configurator.stoeber.de.

In the case of the version with a reinforced bearing and gear ratios ≤ 5, the maximum permitted input speed n_{1maxZB} is reduced. You can find values at http://configurator.stoeber.de

An explanation of the formula symbols can be found in the chapter [▸ 18.1].

i	Type	n_{1MAXDB} [rpm]	n_{1MAXZB} [rpm]	d_{MW} [mm]	J_1 [kgcm²]	m [kg]	$\Delta\varphi_2$ [arcmin]	$\Delta\varphi_{2red}$ [arcmin]	C_2 [Nm/arcmin]	L_{pA} [dB(A)]	M_{2N} [Nm]	M_{2acc} [Nm]	M_{2accHT} [Nm]	M_{2NOT} [Nm]
PHQ431 ($M_{2acc,max}$ = 220 Nm)														
5.500	PHQ431_0055 ME	3000	6000	≤24	1.1	4.0	3.0	1.0	42	59	100	200	220	385
5.500	PHQ431_0055 MEL	3000	6000	≤32	2.7	4.8	3.0	1.0	42	59	100	200	220	400
PHQ432 ($M_{2acc,max}$ = 247 Nm)														
22.00	PHQ432_0220 ME	4000	8000	≤19	0.51	4.8	3.0	1.0	40	60	120	200	238	400
22.00	PHQ432_0220 MEL	4000	8000	≤24	0.94	5.3	3.0	1.0	40	60	120	200	238	400
27.50	PHQ432_0280 ME	4500	8000	≤19	0.46	4.8	3.0	1.0	40	58	120	200	246	400
27.50	PHQ432_0280 MEL	4500	8000	≤24	0.89	5.3	3.0	1.0	40	58	120	200	246	400
38.50	PHQ432_0390 ME	4500	8000	≤19	0.43	4.8	3.0	1.0	40	57	130	200	246	400
38.50	PHQ432_0390 MEL	4500	8000	≤24	0.86	5.3	3.0	1.0	40	57	130	200	246	400
55.00	PHQ432_0550 ME	4500	8000	≤19	0.41	4.8	3.0	1.0	38	55	130	200	247	400
55.00	PHQ432_0550 MEL	4500	8000	≤24	0.84	5.3	3.0	1.0	38	55	130	200	247	400
PHQ531 ($M_{2acc,max}$ = 550 Nm)														
5.500	PHQ531_0055 ME	2500	5000	≤32	3.3	6.6	3.0	1.0	101	60	280	550	550	948
5.500	PHQ531_0055 MEL	2500	5000	≤38	6.9	7.6	3.0	1.0	102	60	280	550	550	948
PHQ532 ($M_{2acc,max}$ = 562 Nm)														
22.00	PHQ532_0220 ME	3500	7000	≤24	1.1	8.1	3.0	1.0	102	61	290	480	530	948
22.00	PHQ532_0220 MEL	3500	7000	≤32	2.7	8.9	3.0	1.0	102	61	290	480	530	948
27.50	PHQ532_0280 ME	3700	7500	≤24	1.0	8.1	3.0	1.0	102	59	300	540	562	948
27.50	PHQ532_0280 MEL	3700	7500	≤32	2.6	8.9	3.0	1.0	102	59	300	540	562	948
38.50	PHQ532_0390 ME	4000	8000	≤24	0.94	8.1	3.0	1.0	100	58	320	530	552	948
38.50	PHQ532_0390 MEL	4000	8000	≤32	2.5	8.9	3.0	1.0	100	58	320	530	552	948
55.00	PHQ532_0550 ME	4000	8000	≤24	0.89	8.1	3.0	1.0	95	56	320	500	500	948
55.00	PHQ532_0550 MEL	4000	8000	≤32	2.5	8.9	3.0	1.0	95	56	320	500	500	948
PHQ731 ($M_{2acc,max}$ = 1050 Nm)														
5.500	PHQ731_0055 ME	2200	5000	≤38	8.9	12	3.0	1.0	216	61	500	1050	1050	1816
5.500	PHQ731_0055 MEL	2200	5000	≤48	19	16	3.0	1.0	222	61	500	1050	1050	2100
PHQ732 ($M_{2acc,max}$ = 1050 Nm)														
22.00	PHQ732_0220 ME	3000	6000	≤32	3.6	15	3.0	1.0	224	62	650	900	1000	1800
22.00	PHQ732_0220 MEL	3000	6000	≤38	7.2	16	3.0	1.0	224	62	650	900	1000	1800
27.50	PHQ732_0280 ME	3500	7000	≤32	3.3	15	3.0	1.0	223	60	650	1050	1050	2100
27.50	PHQ732_0280 MEL	3500	7000	≤38	6.8	16	3.0	1.0	223	60	650	1050	1050	2100
38.50	PHQ732_0390 ME	3700	7000	≤32	2.9	15	3.0	1.0	220	59	680	1050	1050	2100
38.50	PHQ732_0390 MEL	3700	7000	≤38	6.4	16	3.0	1.0	220	59	680	1050	1050	2100
55.00	PHQ732_0550 ME	3700	7000	≤32	2.7	15	3.0	1.0	213	57	680	1050	1050	2100
55.00	PHQ732_0550 MEL	3700	7000	≤38	6.2	16	3.0	1.0	213	57	680	1050	1050	2100
PHQ733 ($M_{2acc,max}$ = 1050 Nm)														
88.00	PHQ733_0880 ME	3300	6000	≤24	1.2	17	3.0	1.0	224	61	680	1050	1050	2100
88.00	PHQ733_0880 MEL	3300	6000	≤32	2.8	17	3.0	1.0	224	61	680	1050	1050	2100
110.0	PHQ733_1100 ME	3300	6000	≤24	1.1	17	3.0	1.0	224	61	680	1050	1050	2100
110.0	PHQ733_1100 MEL	3300	6000	≤32	2.7	17	3.0	1.0	224	61	680	1050	1050	2100
137.5	PHQ733_1380 ME	3700	6500	≤24	1.0	17	3.0	1.0	224	59	680	1050	1050	2100
137.5	PHQ733_1380 MEL	3700	6500	≤32	2.6	17	3.0	1.0	224	59	680	1050	1050	2100
154.0	PHQ733_1540 ME	4000	7000	≤24	0.95	17	3.0	1.0	223	58	680	1050	1050	2100
154.0	PHQ733_1540 MEL	4000	7000	≤32	2.6	17	3.0	1.0	223	58	680	1050	1050	2100
192.5	PHQ733_1930 ME	4000	7000	≤24	0.94	17	3.0	1.0	223	58	680	1050	1050	2100
192.5	PHQ733_1930 MEL	4000	7000	≤32	2.5	17	3.0	1.0	223	58	680	1050	1050	2100
220.0	PHQ733_2200 ME	4000	7000	≤24	0.89	17	3.0	1.0	222	56	680	1050	1050	2100
220.0	PHQ733_2200 MEL	4000	7000	≤32	2.5	17	3.0	1.0	222	56	680	1050	1050	2100
275.0	PHQ733_2750 ME	4000	7000	≤24	0.89	17	3.0	1.0	222	56	680	1050	1050	2100
275.0	PHQ733_2750 MEL	4000	7000	≤32	2.5	17	3.0	1.0	222	56	680	1050	1050	2100

i	Type	n_{1MAXDB} [rpm]	n_{1MAXZB} [rpm]	d_{MW} [mm]	J_1 [kgcm²]	m [kg]	$\Delta\varphi_2$ [arcmin]	$\Delta\varphi_{2red}$ [arcmin]	C_2 [Nm/arcmin]	L_{pA} [dB(A)]	M_{2N} [Nm]	M_{2acc} [Nm]	M_{2accHT} [Nm]	M_{2NOT} [Nm]
PHQ733 ($M_{2acc,max}$ = 1050 Nm)														
385.0	PHQ733_3850 ME	4000	7000	≤24	0.88	17	3.0	1.0	221	56	680	1050	1050	2100
385.0	PHQ733_3850 MEL	4000	7000	≤32	2.5	17	3.0	1.0	221	56	680	1050	1050	2100
550.0	PHQ733_5500 ME	4000	7000	≤24	0.88	17	3.0	1.0	214	56	680	1050	1050	2100
550.0	PHQ733_5500 MEL	4000	7000	≤32	2.5	17	3.0	1.0	214	56	680	1050	1050	2100
PHQ831 ($M_{2acc,max}$ = 3300 Nm)														
5.500	PHQ831_0055 ME	1500	4000	≤48	31	32	3.0	1.0	621	62	1400	2800	3300	3311
5.500	PHQ831_0055 MEL	1500	4000	≤60	59	36	3.0	1.0	652	62	1400	2800	3300	5087
PHQ832 ($M_{2acc,max}$ = 3300 Nm)														
22.00	PHQ832_0220 ME	2500	4500	≤38	11	37	3.0	1.0	709	63	1700	2800	3300	5087
22.00	PHQ832_0220 MEL	2500	4500	≤48	21	41	3.0	1.0	713	63	1700	2800	3300	5087
27.50	PHQ832_0280 ME	2700	5500	≤38	8.9	37	3.0	1.0	707	61	1700	2800	3300	5087
27.50	PHQ832_0280 MEL	2700	5500	≤48	19	41	3.0	1.0	710	61	1700	2800	3300	5087
38.50	PHQ832_0390 ME	3000	6000	≤38	7.7	37	3.0	1.0	697	60	1700	2800	3300	5087
38.50	PHQ832_0390 MEL	3000	6000	≤48	18	41	3.0	1.0	698	60	1700	2800	3300	5087
55.00	PHQ832_0550 ME	3000	6000	≤38	7.0	37	3.0	1.0	669	58	1700	2700	2990	5087
55.00	PHQ832_0550 MEL	3000	6000	≤48	17	41	3.0	1.0	669	58	1700	2700	2990	5087
PHQ833 ($M_{2acc,max}$ = 3300 Nm)														
88.00	PHQ833_0880 ME	3000	5000	≤32	3.7	37	3.0	1.0	711	62	1700	2800	3300	5087
88.00	PHQ833_0880 MEL	3000	5000	≤38	7.3	38	3.0	1.0	711	62	1700	2800	3300	5087
110.0	PHQ833_1100 ME	3000	5000	≤32	3.6	37	3.0	1.0	711	62	1700	2800	3300	5087
110.0	PHQ833_1100 MEL	3000	5000	≤38	7.2	38	3.0	1.0	711	62	1700	2800	3300	5087
137.5	PHQ833_1380 ME	3500	6000	≤32	3.3	37	3.0	1.0	710	60	1700	2800	3300	5087
137.5	PHQ833_1380 MEL	3500	6000	≤38	6.8	38	3.0	1.0	710	60	1700	2800	3300	5087
154.0	PHQ833_1540 ME	3700	6500	≤32	3.0	37	3.0	1.0	709	59	1700	2800	3300	5087
154.0	PHQ833_1540 MEL	3700	6500	≤38	6.5	38	3.0	1.0	709	59	1700	2800	3300	5087
192.5	PHQ833_1930 ME	3700	6500	≤32	2.9	37	3.0	1.0	709	59	1700	2800	3300	5087
192.5	PHQ833_1930 MEL	3700	6500	≤38	6.4	38	3.0	1.0	709	59	1700	2800	3300	5087
220.0	PHQ833_2200 ME	3700	6500	≤32	2.7	37	3.0	1.0	705	57	1700	2800	3300	5087
220.0	PHQ833_2200 MEL	3700	6500	≤38	6.2	38	3.0	1.0	705	57	1700	2800	3300	5087
275.0	PHQ833_2750 ME	3700	6500	≤32	2.7	37	3.0	1.0	707	57	1700	2800	3300	5087
275.0	PHQ833_2750 MEL	3700	6500	≤38	6.2	38	3.0	1.0	707	57	1700	2800	3300	5087
385.0	PHQ833_3850 ME	3700	6500	≤32	2.7	37	3.0	1.0	698	57	1700	2800	3300	5087
385.0	PHQ833_3850 MEL	3700	6500	≤38	6.2	38	3.0	1.0	698	57	1700	2800	3300	5087
550.0	PHQ833_5500 ME	3700	6500	≤32	2.7	37	3.0	1.0	672	57	1700	2700	2990	5087
550.0	PHQ833_5500 MEL	3700	6500	≤38	6.2	38	3.0	1.0	672	57	1700	2700	2990	5087
PHQ932 ($M_{2acc,max}$ = 6000 Nm)														
18.00	PHQ932_0180 ME	1800	3000	≤48	64	81	3.0	–	1177	66	3800	6000	–	10115
18.00	PHQ932_0180 MEL	1800	3000	≤60	100	86	3.0	–	1220	66	3800	6000	–	10115
24.00	PHQ932_0240 ME	2200	3500	≤48	35	81	3.0	–	1191	64	3800	6000	–	12000
24.00	PHQ932_0240 MEL	2200	3500	≤60	71	86	3.0	–	1215	64	3800	6000	–	12000
30.00	PHQ932_0300 ME	2500	4000	≤48	28	81	3.0	–	1192	62	3800	6000	–	12000
30.00	PHQ932_0300 MEL	2500	4000	≤60	64	86	3.0	–	1208	62	3800	6000	–	12000
42.00	PHQ932_0420 ME	2800	4500	≤48	20	81	3.0	–	1182	61	3800	6000	–	12000
42.00	PHQ932_0420 MEL	2800	4500	≤55	53	86	3.0	–	1192	61	3800	6000	–	12000
60.00	PHQ932_0600 ME	2800	4500	≤48	18	81	3.0	–	1144	59	3800	6000	–	12000
60.00	PHQ932_0600 MEL	2800	4500	≤55	50	86	3.0	–	1148	59	3800	6000	–	12000
PHQ933 ($M_{2acc,max}$ = 6000 Nm)														
72.00	PHQ933_0720 ME	2200	4500	≤38	13	85	3.0	–	1198	63	3800	6000	–	12000
72.00	PHQ933_0720 MEL	2200	4500	≤48	23	89	3.0	–	1202	63	3800	6000	–	12000
96.00	PHQ933_0960 ME	2500	4500	≤38	11	85	3.0	–	1203	63	3800	6000	–	12000
96.00	PHQ933_0960 MEL	2500	4500	≤48	21	89	3.0	–	1205	63	3800	6000	–	12000
120.0	PHQ933_1200 ME	2500	4500	≤38	11	85	3.0	–	1200	63	3800	6000	–	12000
120.0	PHQ933_1200 MEL	2500	4500	≤48	21	89	3.0	–	1201	63	3800	6000	–	12000
150.0	PHQ933_1500 ME	3000	5500	≤38	9.0	85	3.0	–	1200	61	3800	6000	–	12000
150.0	PHQ933_1500 MEL	3000	5500	≤48	19	89	3.0	–	1201	61	3800	6000	–	12000
168.0	PHQ933_1680 ME	3300	6000	≤38	6.2	85	3.0	–	1202	60	3800	6000	–	12000
168.0	PHQ933_1680 MEL	3300	6000	≤48	17	89	3.0	–	1203	60	3800	6000	–	12000
210.0	PHQ933_2100 ME	3300	6000	≤38	6.0	85	3.0	–	1199	60	3800	6000	–	12000
210.0	PHQ933_2100 MEL	3300	6000	≤48	17	89	3.0	–	1200	60	3800	6000	–	12000
240.0	PHQ933_2400 ME	3300	6000	≤38	5.4	85	3.0	–	1197	58	3800	6000	–	12000
240.0	PHQ933_2400 MEL	3300	6000	≤48	17	89	3.0	–	1197	58	3800	6000	–	12000
300.0	PHQ933_3000 ME	3300	6000	≤38	5.4	85	3.0	–	1196	58	3800	6000	–	12000
300.0	PHQ933_3000 MEL	3300	6000	≤48	17	89	3.0	–	1196	58	3800	6000	–	12000
420.0	PHQ933_4200 ME	3300	6000	≤38	5.3	85	3.0	–	1184	58	3800	6000	–	12000
420.0	PHQ933_4200 MEL	3300	6000	≤48	17	89	3.0	–	1184	58	3800	6000	–	12000

i	Type	n_{1MAXDB} [rpm]	n_{1MAXZB} [rpm]	d_{MW} [mm]	J_1 [kgcm²]	m [kg]	$\Delta\varphi_2$ [arcmin]	$\Delta\varphi_{2red}$ [arcmin]	C_2 [Nm/arcmin]	L_{pA} [dB(A)]	M_{2N} [Nm]	M_{2acc} [Nm]	M_{2accHT} [Nm]	M_{2NOT} [Nm]
PHQ933 ($M_{2acc,max}$ = 6000 Nm)														
600.0	PHQ933_6000 ME	3300	6000	≤38	5.3	85	3.0	–	1144	58	3800	6000	–	12000
600.0	PHQ933_6000 MEL	3300	6000	≤48	17	89	3.0	–	1144	58	3800	6000	–	12000
PHQ1032 ($M_{2acc,max}$ = 10000 Nm)														
24.00	PHQ1032_0240 ME	2000	3000	≤60	100	118	3.0	–	2062	65	6500	10000	–	20000
30.00	PHQ1032_0300 ME	2200	3500	≤60	82	118	3.0	–	2058	63	6500	10000	–	20000
42.00	PHQ1032_0420 ME	2500	4000	≤60	67	118	3.0	–	2040	62	6500	10000	–	20000
60.00	PHQ1032_0600 ME	2500	4000	≤60	60	118	3.0	–	1970	60	6500	10000	–	20000
PHQ1033 ($M_{2acc,max}$ = 10000 Nm)														
96.00	PHQ1033_0960 ME	2200	3500	≤48	36	128	3.0	–	2062	64	6500	10000	–	20000
96.00	PHQ1033_0960 MEL	2200	3500	≤60	72	133	3.0	–	2067	64	6500	10000	–	20000
120.0	PHQ1033_1200 ME	2200	3500	≤48	35	128	3.0	–	2058	64	6500	10000	–	20000
120.0	PHQ1033_1200 MEL	2200	3500	≤60	71	133	3.0	–	2061	64	6500	10000	–	20000
150.0	PHQ1033_1500 ME	2500	4000	≤48	28	128	3.0	–	2058	62	6500	10000	–	20000
150.0	PHQ1033_1500 MEL	2500	4000	≤60	64	133	3.0	–	2060	62	6500	10000	–	20000
168.0	PHQ1033_1680 ME	2800	4500	≤48	21	128	3.0	–	2062	61	6500	10000	–	20000
168.0	PHQ1033_1680 MEL	2800	4500	≤55	53	133	3.0	–	2063	61	6500	10000	–	20000
210.0	PHQ1033_2100 ME	2800	4500	≤48	20	128	3.0	–	2058	61	6500	10000	–	20000
210.0	PHQ1033_2100 MEL	2800	4500	≤55	53	133	3.0	–	2059	61	6500	10000	–	20000
240.0	PHQ1033_2400 ME	2800	4500	≤48	18	128	3.0	–	2054	59	6500	10000	–	20000
240.0	PHQ1033_2400 MEL	2800	4500	≤55	50	133	3.0	–	2055	59	6500	10000	–	20000
300.0	PHQ1033_3000 ME	2800	4500	≤48	18	128	3.0	–	2053	59	6500	10000	–	20000
300.0	PHQ1033_3000 MEL	2800	4500	≤55	50	133	3.0	–	2054	59	6500	10000	–	20000
420.0	PHQ1033_4200 ME	2800	4500	≤48	18	128	3.0	–	2036	62	6500	10000	–	20000
420.0	PHQ1033_4200 MEL	2800	4500	≤55	50	133	3.0	–	2036	62	6500	10000	–	20000
600.0	PHQ1033_6000 ME	2800	4500	≤48	17	128	3.0	–	1969	59	6500	10000	–	20000
600.0	PHQ1033_6000 MEL	2800	4500	≤55	50	133	3.0	–	1969	59	6500	10000	–	20000
PHQ1132 ($M_{2acc,max}$ = 22000 Nm)														
24.00	PHQ1132_0240 ME	1800	3800	≤60	175	242	3.0	–	3533	68	13000	22000	–	32208
30.00	PHQ1132_0300 ME	2000	3300	≤60	128	242	3.0	–	3538	66	13000	22000	–	40000
42.00	PHQ1132_0420 ME	2300	3800	≤60	89	242	3.0	–	3515	65	13000	22000	–	32708
60.00	PHQ1132_0600 ME	2300	2800	≤60	71	242	3.0	–	3460	63	13000	22000	–	40000
PHQ1133 ($M_{2acc,max}$ = 22000 Nm)														
96.00	PHQ1133_0960 ME	2200	3500	≤48	41	238	3.0	–	3515	64	13000	22000	–	40000
96.00	PHQ1133_0960 MEL	2200	3500	≤60	77	242	3.0	–	3528	64	13000	22000	–	40000
120.0	PHQ1133_1200 ME	2200	3500	≤48	37	238	3.0	–	3502	62	13000	22000	–	40000
120.0	PHQ1133_1200 MEL	2200	3500	≤60	74	242	3.0	–	3511	62	13000	22000	–	40000
150.0	PHQ1133_1500 ME	2500	4000	≤48	30	238	3.0	–	3503	62	13000	22000	–	40000
150.0	PHQ1133_1500 MEL	2500	4000	≤60	66	242	3.0	–	3508	62	13000	22000	–	40000
168.0	PHQ1133_1680 ME	2800	4500	≤48	22	238	3.0	–	3513	61	13000	22000	–	40000
168.0	PHQ1133_1680 MEL	2800	4500	≤55	55	242	3.0	–	3518	61	13000	22000	–	40000
210.0	PHQ1133_2100 ME	2800	4500	≤48	21	238	3.0	–	3502	61	13000	22000	–	40000
210.0	PHQ1133_2100 MEL	2800	4500	≤55	54	242	3.0	–	3505	61	13000	22000	–	40000
240.0	PHQ1133_2400 ME	2800	4500	≤48	19	238	3.0	–	3494	59	13000	22000	–	40000
240.0	PHQ1133_2400 MEL	2800	4500	≤55	51	242	3.0	–	3496	59	13000	22000	–	40000
300.0	PHQ1133_3000 ME	2800	4500	≤48	18	238	3.0	–	3489	59	13000	22000	–	40000
300.0	PHQ1133_3000 MEL	2800	4500	≤55	51	242	3.0	–	3490	59	13000	22000	–	40000
PHQ1232 ($M_{2acc,max}$ = 43000 Nm)														
24.00	PHQ1232_0240 ME	1200	3000	≤60	537	439	3.0	–	6248	72	25000	43000	–	53836
42.00	PHQ1232_0420 ME	1700	3500	≤60	371	439	3.0	–	6236	69	25000	43000	–	80000
PHQ1233 ($M_{2acc,max}$ = 43000 Nm)														
96.00	PHQ1233_0960 ME	2000	3000	≤60	116	452	3.0	–	6271	65	25000	43000	–	80000
120.0	PHQ1233_1200 ME	2200	3500	≤60	92	452	3.0	–	6269	63	25000	43000	–	80000
168.0	PHQ1233_1680 ME	2500	4000	≤60	72	452	3.0	–	6258	62	25000	43000	–	80000
210.0	PHQ1233_2100 ME	2200	3500	≤60	83	452	3.0	–	6153	63	25000	43000	–	80000
240.0	PHQ1233_2400 ME	2500	4000	≤60	62	452	3.0	–	6216	60	25000	43000	–	80000
294.0	PHQ1233_2940 ME	2500	4000	≤60	68	452	3.0	–	6149	62	25000	43000	–	80000
420.0	PHQ1233_4200 ME	2500	4000	≤60	60	452	3.0	–	6136	60	25000	43000	–	80000

4.3 Dimensional drawings

In this chapter, you can find the dimensions of the gear units as well as example dimensions of the mountable motor adapters.

Dimensions can exceed the specifications of ISO 2768-mK due to casting tolerances or accumulation of individual tolerances.

We reserve the right to make dimensional changes due to ongoing technical development.

You can download 3D models of our standard drives at http://configurator.stoeber.de.

4.3.1 PHQ4 – PHQ10 F shaft design (flange shaft)

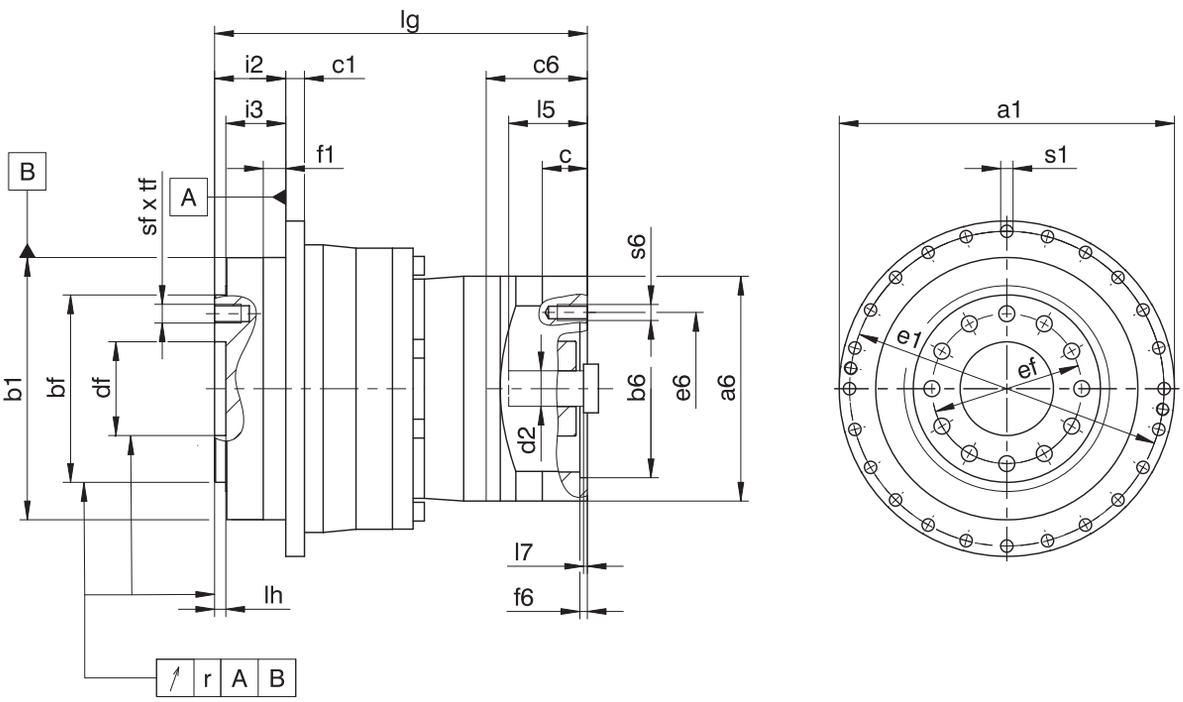

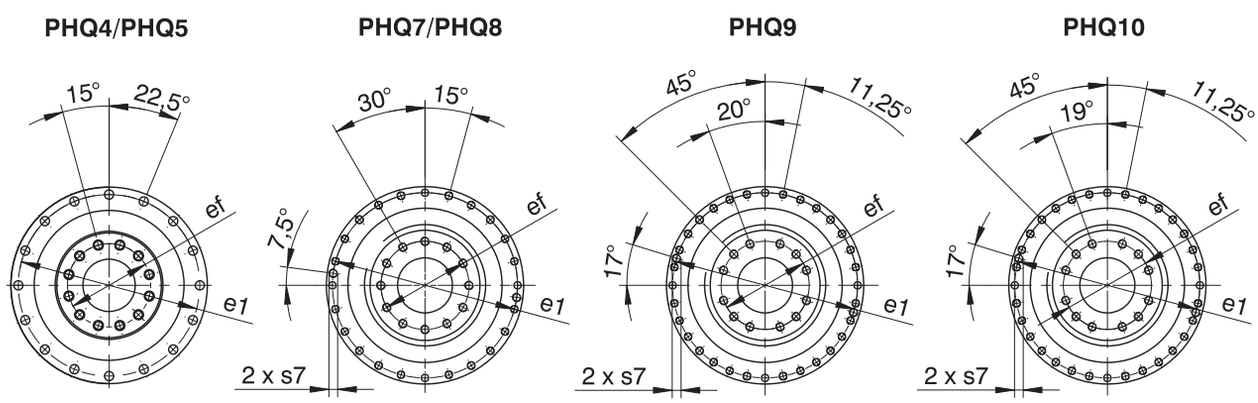

Dimensions of gear units

Type	Øa1	Øb1	Øbf	c1	Ødf	Øe1	Øef	f1	i2	i3	lh	r	Øs1	s7	sf	tf
PHQ431	118_{h7}	90_{h7}	63_{h7}	7	31.5^{H6}	109	50	10	30	24	6	0.020	5.5	–	M6	11
PHQ432	118_{h7}	90_{h7}	63_{h7}	7	31.5^{H6}	109	50	10	30	24	6	0.020	5.5	–	M6	11
PHQ531	145_{h7}	110_{h7}	80_{h7}	8	40.0^{H6}	135	63	10	29	23	6	0.020	5.5	–	M8	11
PHQ532	145_{h7}	110_{h7}	80_{h7}	8	40.0^{H6}	135	63	10	29	23	6	0.020	5.5	–	M8	11
PHQ731	179_{h7}	140_{h7}	100_{h7}	10	50.0^{H6}	168	80	12	38	32	6	0.025	6.6	–	M10	16
PHQ732	179_{h7}	140_{h7}	100_{h7}	10	50.0^{H6}	168	80	12	38	32	6	0.025	6.6	–	M10	16
PHQ733	179_{h7}	140_{h7}	100_{h7}	10	50.0^{H6}	168	80	12	38	32	6	0.025	6.6	–	M10	16
PHQ831	247_{h7}	200_{h7}	160_{h7}	12	80.0^{H6}	233	125	15	50	42	8	0.030	9.0	M10	M12	17
PHQ832	247_{h7}	200_{h7}	160_{h7}	12	80.0^{H6}	233	125	15	50	42	8	0.030	9.0	M10	M12	17
PHQ833	247_{h7}	200_{h7}	160_{h7}	12	80.0^{H6}	233	125	15	50	42	8	0.030	9.0	M10	M12	17
PHQ932	300_{h7}	255_{h7}	180_{h7}	18	90.0^{H6}	280	145	20	66	55	12	0.030	13.5	M8	M20	28
PHQ933	300_{h7}	255_{h7}	180_{h7}	18	90.0^{H6}	280	145	20	66	55	12	0.030	13.5	M8	M20	28
PHQ1032	330_{h7}	285_{h7}	200_{h7}	20	95.0^{H6}	310	166	20	75	60	10	0.040	13.5	M10	M24	35
PHQ1033	330_{h7}	285_{h7}	200_{h7}	20	95.0^{H6}	310	166	20	75	60	10	0.040	13.5	M10	M24	35

Example dimensions for the motor connection + total length

Type	Øb6	Øe6	Ød2max	l5	□a6	c	c6	f6	l7	lg	s6
PHQ431_ME	95^{H7}	115	24	41	100	21.0	42.5	4.0	3.5	113.5	M8
PHQ432_ME	60^{H7}	75	19	41	75	18.0	41.5	3.5	4.0	150.5	M5
PHQ531_ME	110^{H7}	130	32	51	120	24.0	54.0	4.0	4.5	132.0	M8
PHQ532_ME	95^{H7}	115	24	41	100	21.0	42.5	4.0	3.5	161.0	M8
PHQ731_ME	130^{H7}	165	38	61	150	26.0	66.0	5.5	4.5	161.0	M10
PHQ732_ME	110^{H7}	130	32	51	120	24.0	54.0	4.0	4.5	199.0	M8
PHQ733_ME	95^{H7}	115	24	41	100	21.0	42.5	4.0	3.5	228.0	M8
PHQ831_ME	180^{H7}	215	48	83	204	35.0	80.5	5.5	8.5	218.0	M12
PHQ832_ME	130^{H7}	165	38	61	150	26.0	66.0	5.5	4.5	263.0	M10
PHQ833_ME	110^{H7}	130	32	51	120	24.0	54.0	4.0	4.5	301.0	M8
PHQ932_ME	180^{H7}	215	48	83	204	35.0	94.0	5.5	5.5	384.5	M12
PHQ933_ME	130^{H7}	165	38	61	150	26.0	76.0	5.5	4.5	443.0	M10
PHQ1032_ME	180^{H7}	215	60	85	230	43.0	108.0	6.0	5.0	458.0	M12
PHQ1033_ME	180^{H7}	215	48	83	204	35.0	94.0	5.5	5.5	538.0	M12

In the table above, you will find example dimensions for the motor connection for the ME motor adapter. **Note that when dimension c is lengthened (depending on the motor used), dimensions c6, l5 and lg are also lengthened accordingly.**

You will find additional motor connection dimensions for motor adapters ME, MEL, MF and MFL in our STOBER Configurator at http://configurator.stoeber.de. Here, you can directly download a 3D model of your drive.

4.3.2 PHQ11 – PHQ12 F shaft design (flange shaft)

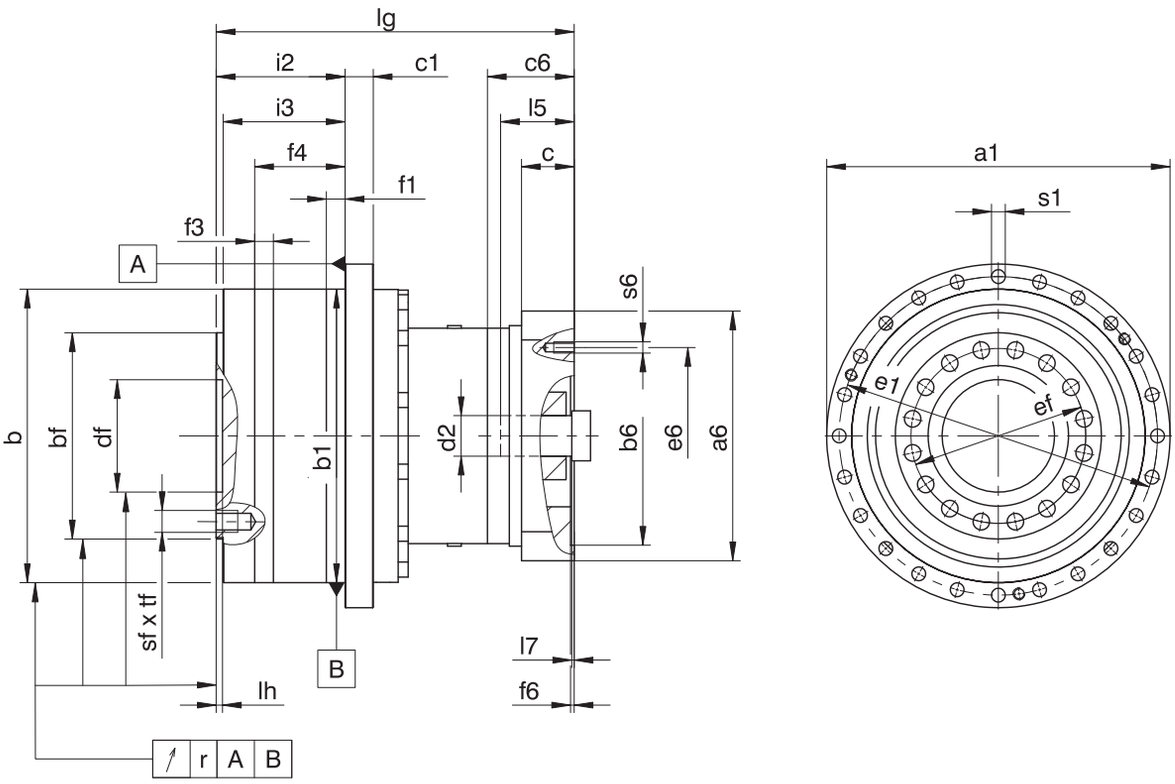

PHQ11

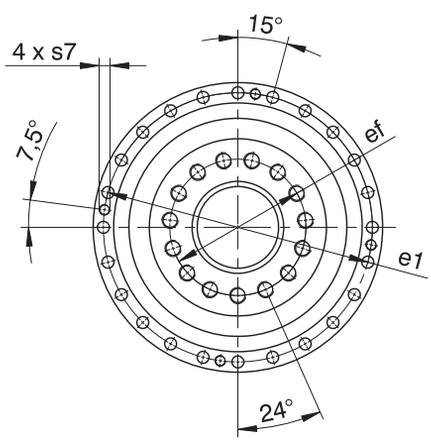

PHQ12

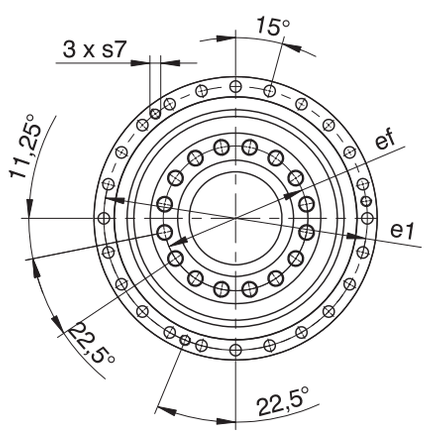

Dimensions of gear units

Type	Øa1	Øb	Øb1	Øbf	c1	Ødf	Øe1	Øef	f1	f3	f4	i2	i3	lh	r	Øs1	s7	sf	tf
PHQ1132	425	365_{g6}	365_{h6}	260_{h7}	32	120.0^{H6}	395	200	30	30	120	190.0	180.0	10	0.040	17.5	M16	M24	35.5
PHQ1133	425	365_{g6}	365_{h6}	260_{h7}	32	120.0^{H6}	395	200	30	30	120	190.0	180.0	10	0.040	17.5	M16	M24	35.5
PHQ1232	550	470_{g6}	470_{h6}	330_{h7}	45	180.0^{H7}	510	280	30	30	145	206.5	195.5	10	0.040	22.0	M16	M30	48.0
PHQ1233	550	470_{g6}	470_{h6}	330_{h7}	45	180.0^{H7}	510	280	30	30	145	206.5	195.5	10	0.040	22.0	M16	M30	48.0

Example dimensions for the motor connection + total length

Type	Øb6	Øe6	Ød2max	l5	□a6	c	c6	f6	l7	lg	s6
PHQ1132_ME	250^{H7}	300	60	110	315	72.0	131.0	6.0	15.0	473.0	M16
PHQ1133_ME	180^{H7}	215	48	83	204	35.0	94.0	5.5	5.5	588.5	M12
PHQ1232_ME	300^{H7}	350	60	141	355	84.5	139.0	6.0	15.0	573.5	M16
PHQ1233_ME	180^{H7}	215	60	85	230	43.0	108.0	6.0	5.0	737.0	M12

In the table above, you will find example dimensions for the motor connection for the ME motor adapter. **Note that when dimension c is lengthened (depending on the motor used), dimensions c6, l5 and lg are also lengthened accordingly.**

You will find additional motor connection dimensions for motor adapters ME, MEL, MF and MFL in our STOBER Configurator at http://configurator.stoeber.de. Here, you can directly download a 3D model of your drive.

4.4 Type designation

4.4.1 Type designation PHQ4 – PHQ8

In this chapter, you can find an explanation of the type designation for sizes PHQ4 – PHQ8 with the associated options.

Additional ordering information not included in the type designation can be found at the end of the chapter.

Example code

PHQ	**7**	**3**	**3**	**S**	**F**	**S**	**S**	**0880**	**ME**

Explanation

Code	Designation	Design
PHQ	Type	Planetary gear unit
7	Size	7 (example)
3	Generation	Generation 3
1 2 **3**	Stages	Single-stage Two-stage Three-stage
S	Housing	Standard
F	Shaft	Flange shaft
S V	Bearing	Standard bearing Reinforced bearing (PHQ4 – PHQ5)
S R	Backlash	Standard Reduced
0880	Transmission ratio (i x 10)	i = 88 (example)
ME MEL MF MFL MB[1]	Motor adapter	Motor adapter with EasyAdapt coupling Motor adapter with EasyAdapt coupling for large motors Motor adapter with FlexiAdapt coupling Motor adapter with FlexiAdapt coupling for large motors ServoStop motor adapter with brake

In order to complete the type designation, also specify:

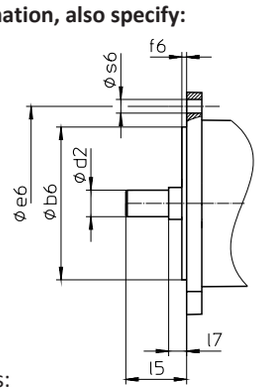

- Motor type or motor dimensions:

  To choose a suitable motor connection, use the STOBER Configurator at http://configurator.stoeber.de and choose your motor or the dimensions of the motor connection.
- Mounting position (for three-stage gear units), see the chapter [▸ 4.5.5]
- Radial shaft seal rings at the output made of NBR or FKM (option), see the chapter [▸ 4.6.4]
- Reverse operation of the output shaft from ±20° to ±90° and horizontal installation, note the chapter [▸ 4.6.5]
- PHQ5 – PHQ8: Double seal for motor adapter (optional)
- Socket wrench insert for mounting the motor on the gear unit using the ME/MEL/MF/MFL motor adapter (optional)

[1] You can find more details in the catalog for ServoStop servo gear unit with brake ID 443234.

4.4.2 Type designation PHQ9 – PHQ12

In this chapter, you can find an explanation of the type designation for sizes PHQ9 – PHQ12 with the associated options.

Additional ordering information not included in the type designation can be found at the end of the chapter.

Example code

PHQ	9	3	2	F	0420	ME

Explanation

Code	Designation	Design
PHQ	Type	Planetary gear unit
9	Size	9 (example)
3	Generation	Generation 3
2 3	Stages	Two-stage Three-stage
F	Shaft	Flange shaft
0420	Transmission ratio (i x 10)	i = 42 (example)
ME MEL MB[2]	Motor adapter	Motor adapter with EasyAdapt coupling Motor adapter with EasyAdapt coupling for large motors ServoStop motor adapter with brake

In order to complete the type designation, also specify:

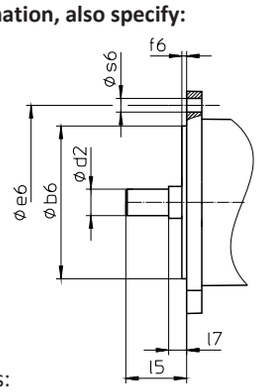

- Motor type or motor dimensions:

  To choose a suitable motor connection, use the STOBER Configurator at http://configurator.stoeber.de and choose your motor or the dimensions of the motor connection.
- Mounting position (for three-stage gear units), see the chapter [▸ 4.5.5]
- Radial shaft seal rings at the output made of NBR or FKM (option), see the chapter [▸ 4.6.4]
- Reverse operation of the output shaft from ±20° to ±90° and horizontal installation, note the chapter [▸ 4.6.5]
- Socket wrench insert for mounting the motor on the gear unit using the ME/MEL motor adapter (optional)

[2] You can find more details in the catalog for ServoStop servo gear unit with brake ID 443234.

4.4.3 Nameplate

An example gear unit nameplate is explained in the figure below.

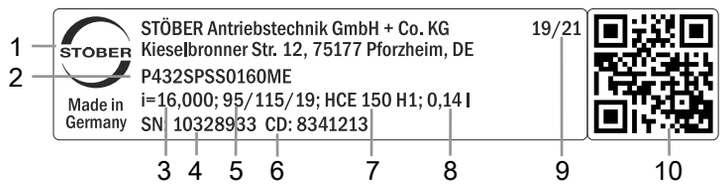

Code	Designation
1	Name of manufacturer
2	Type designation
3	Gear ratio of the gear unit
4	Serial number of the gear unit
5	Dimensions of the motor adapter (diameter of pilot/bolt circle/motor shaft)
6	Customer-specific data
7	Lubricant specification
8	Lubricant fill volume
9	Date of manufacture (year/calendar week)
10	QR code (link to product information)

4.4.3.1 Supporting documents

You can view or download supporting documents for the product by reading off the serial number on the nameplate of the product and entering it at the following address online:
https://id.stober.com

Alternatively, you can use a suitable mobile device to scan in the QR code on the nameplate of the product in order to be linked to the supporting documents.

4.5 Product description

4.5.1 Input options

Motor adapter for attaching synchronous servo motors

http://www.stoeber.de/en/PHQME

MB motor adapter with brake for attaching synchronous servo motors

http://www.stoeber.de/en/PHQMB

EZ synchronous servo motor

http://www.stoeber.de/en/PHQEZ

4.5.2 Motor adapter with EasyAdapt coupling (ME/MEL)

In this chapter, you will find a description of the EasyAdapt coupling.

Properties:

- Fast and easy motor attachment
- One-piece, rugged clamp coupling with expanding function
- Lowest mass moments of inertia for the highest dynamics
- Balanced for smooth running without vibration, even at high speeds
- Large motor shaft diameter range
- Error-free, thanks to exact centering of the motor
- For reduced backlash, the motor shaft bearing must have an axially backlash-free design

Fig. 1: EasyAdapt coupling

4.5.3 Motor adapter with FlexiAdapt coupling (MF/MFL)

In this chapter, you will find a description of the FlexiAdapt coupling.

Properties:

- Fast and easy motor attachment
- Rugged, laser-welded bellow coupling with expanding function
- With integrated thermal length compensation, compensates for linear expansion of the motor shaft
- Motor shaft decoupled from axial forces
- Balanced for smooth running without vibration, even at high speeds
- Large motor shaft diameter range
- Error-free, thanks to exact centering of the motor

Fig. 2: FlexiAdapt coupling

4.5.4 Installation conditions

The torque and force values listed in this catalog are valid under the following conditions:

- When the flange shaft and gear housing are fastened on the machine side using screws of strength class 12.9
- When the gear housings are adjusted at pilot øb1, and also at pilot Øb for sizes PHQ11 and PHQ12. The machine-side fit must be H7.
- When the flange shaft is adjusted using the connecting element at pilot øbf or ødf

4.5.5 Mounting positions

The following table shows the standard mounting positions. Please indicate the mounting position when ordering 3-stage gear units.

EL1	EL5	EL6
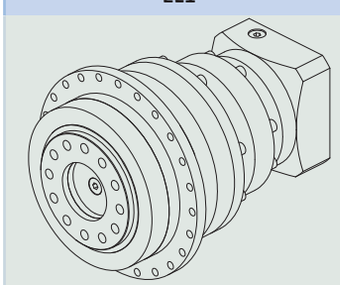	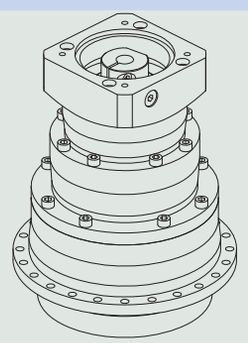	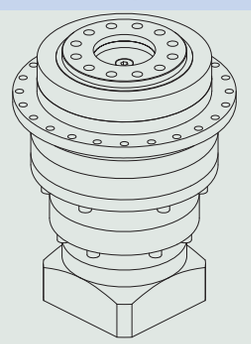
Horizontal output	Vertical downward output	Vertical upward output

4.5.6 Lubricants

STOBER fills the gear units with the amount and type of lubricant specified on the nameplate. The filling volume and the structure of the gear units depend on the mounting position.

Only install the gear units in the intended mounting position! Reposition the gear units only after consulting STOBER. Otherwise, STOBER assumes no liability for the gear units.

You will receive lubricants for use in the food industry upon request.

4.5.7 Other product features

Feature	Value
Max. permitted gear unit temperature (on the surface of the gear unit)	≤ 90 °C
Paint	Black RAL 9005
Explosion-proof design in accordance with (ATEX) Directive 2014/34/EU (optional)	Available, see Document ID 441677_en
Efficiency:	
η_{get} single-stage	96%
η_{get} two-stage	93%
η_{get} three-stage	90%
Protection class: [3]	IP65

4.5.8 Direction of rotation

The input and output rotate in the same direction.

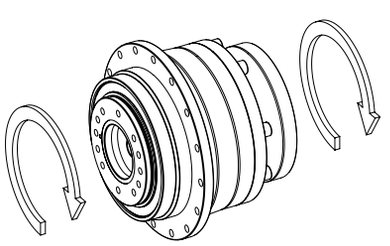

[3] Observe the protection class of all the components.

4.6 Project configuration

Project your drives using our SERVOsoft designing software. Download SERVOsoft for free at https://www.stoeber.de/en/ServoSoft.

Observe the limit conditions in this chapter to ensure a safe design for your drives.

An explanation of the formula symbols can be found in the chapter [▸ 18.1].

4.6.1 Drive selection

The formula symbols for values actually present in the application are marked with *.

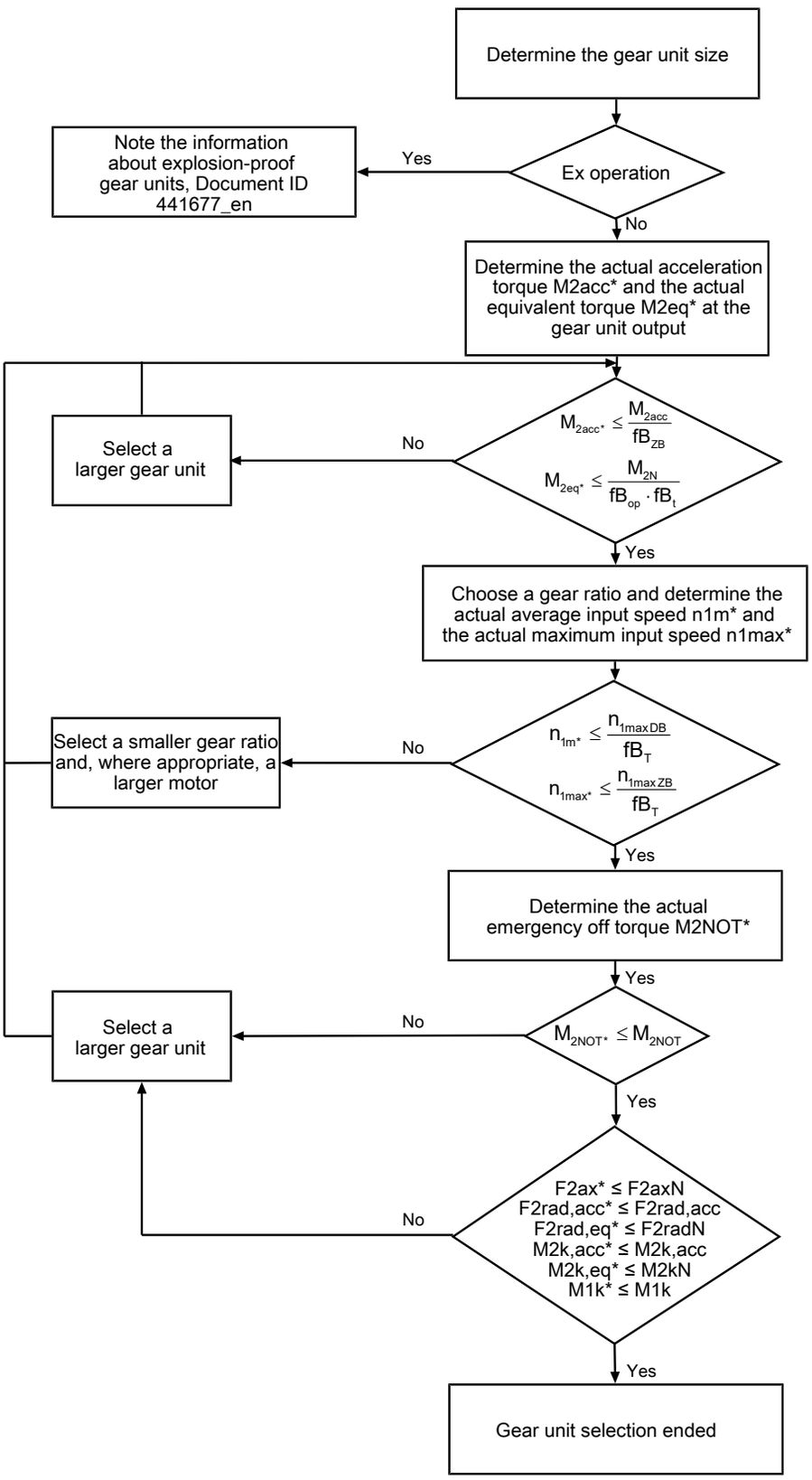

Calculate the forces and tilting torques in the chapter Permitted shaft loads.

Refer to the selection tables for the values for i, n_{1maxDB}, n_{1maxZB}, M_{2acc} (M_{2accHT} for reduced backlash), M_{2NOT} and M_{2N}.

The values for fB_T, fB_{op}, fB_t and fB_{ZB} can be found in the corresponding tables in this chapter.

Example of cyclic operation

The following calculations are based on a representation of the power taken from the output based in accordance with the following example:

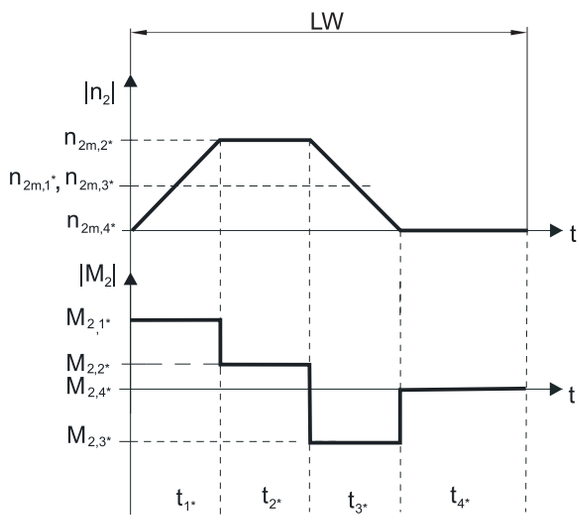

Calculation of the actual maximum acceleration torque

$$M_{2acc*} = J_{tot} \cdot \frac{\Delta n_2}{9.55 \cdot \Delta t} + M_{L*}$$

Calculation of the actual average input speed

$$n_{1m*} = n_{2m*} \cdot i$$

$$n_{2m*} = \frac{|n_{2m,1*}| \cdot t_{1*} + \ldots + |n_{2m,n*}| \cdot t_{n*}}{t_{1*} + \ldots + t_{n*}}$$

If $t_{1*} + \ldots + t_{3*} \geq 6$ min, calculate n_{2m*} without the rest phase t_{4*}.

The values for the ratio i can be found in the selection tables.

Calculation of the actual emergency-off torque

$$M_{2NOT*} = J_{tot} \cdot \frac{\Delta n_2}{9.55 \cdot \Delta t} + M_{L*}$$

Calculation of the actual equivalent torque

$$M_{2eq*} = \sqrt[3]{\frac{|n_{2m,1*}| \cdot t_{1*} \cdot |M_{2,1*}{}^3| + \ldots + |n_{2m,n*}| \cdot t_{n*} \cdot |M_{2,n*}{}^3|}{|n_{2m,1*}| \cdot t_{1*} + \ldots + |n_{2m,n*}| \cdot t_{n*}}}$$

Operating factors

Operating mode	fB_{op}
Uniform continuous operation	1.00
Cyclic operation	1.00
Reversing load cyclic operation	1.00

Run time	fB_t
Daily runtime ≤ 8 h	1.00
Daily runtime ≤ 16 h	1.15
Daily runtime ≤ 24 h	1.20

Cyclic operation	fB_{ZB}
≤ 1000 load changes/hour (LW/h)	1.00
> 1000 load changes/hour (LW/h)	1.15

Temperature		fB_T
Motor cooling	**Surrounding temperature**	
Motor with forced ventilation	≤ 20 °C	0.9
	≤ 30 °C	1.0
	≤ 40 °C	1.15
Motor with convection cooling	≤ 20 °C	1.0
	≤ 30 °C	1.1
	≤ 40 °C	1.25

Notes

- The maximum permitted gear unit temperature of ≤ 90 °C must not be exceeded. Doing so may result in damage to the gear unit.

4.6.2 Permitted shaft loads for the output shaft

The values specified in the tables apply to the permitted shaft loads:

- For shaft dimensions in accordance with the catalog
- For output speeds n_{2m*} ≤ 100 rpm ($F^{2axN} = F_{2ax100}$; $F_{2radN} = F_{2rad100}$; $M_{2kN} = M_{2k100}$)
- Only if radial forces on the gear unit are stabilized by its pilots (housing, flange shaft)

Permitted shaft loads for standard bearing S

Type	z_2 [mm]	F_{2ax100} [N]	$F_{2rad100}$ [N]	$F_{2rad,acc}$ [N]	M_{2k100} [Nm]	$M_{2k,acc}$ [Nm]	C_{2k} [Nm/arcmin]
PHQ4	83.0	2150	3095	3929	257	326	160
PHQ5	97.0	4150	4536	4897	440	475	380
PHQ7	86.0	6150	17045	17045	1466	1466	500
PHQ8	125.5	10050	27778	33333	3486	4183	1550
PHQ9	155.0	33000	48387	70968	7500	11000	7500
PHQ10	171.0	50000	51462	73099	8800	12500	9500
PHQ11	231.0	60000	47619	60606	11000	14000	11500
PHQ12	281.0	70000	53380	71040	15000	20000	14000

Permitted shaft loads for reinforced bearing V

Type	z_2 [mm]	F_{2ax100} [N]	$F_{2rad100}$ [N]	$F_{2rad,acc}$ [N]	M_{2k100} [Nm]	$M_{2k,acc}$ [Nm]	C_{2k} [Nm/arcmin]
PHQ4	88.5	2900	4000	4000	354	354	160
PHQ5	104.0	5000	5500	5500	572	572	380

For other output speeds, download diagrams at http://configurator.stoeber.de.

The following applies to output speeds n_{2m*} > 100 rpm:

$$F_{2axN} = \frac{F_{2ax100}}{\sqrt[3]{\frac{n_{2m*}}{100\ \text{rpm}}}} \qquad F_{2radN} = \frac{F_{2rad100}}{\sqrt[3]{\frac{n_{2m*}}{100\ \text{rpm}}}} \qquad M_{2kN} = \frac{M_{2k100}}{\sqrt[3]{\frac{n_{2m*}}{100\ \text{rpm}}}}$$

The values for F_{2ax100}, $F_{2rad100}$ and M_{2k100} can be found in the table "Permitted shaft loads" in this chapter.

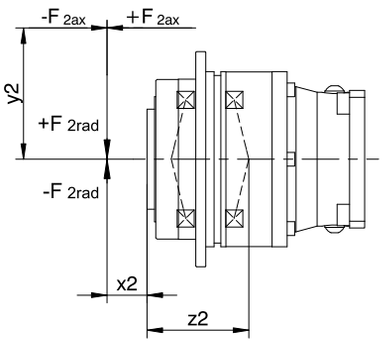

Fig. 3: Force application points

You can determine the permitted radial forces from the permitted breakdown torque M_{2kN} and $M_{2k,acc}$. The actual radial forces may not exceed the permitted radial forces. The permitted radial forces pertain to the shaft end (x2 = 0).

$$M_{2k,acc*} = \frac{2 \cdot F_{2ax*} \cdot y_2 + F_{2rad,acc*} \cdot (x_2 + z_2)}{1000} \leq M_{2k,acc}$$

For applications with multiple axial and/or radial forces, you must add the forces as vectors.

In the event of EMERGENCY OFF operation (max. 1000 load changes), you can multiply the permitted forces and torques for F_{2ax100}, $F_{2rad100}$ and M_{2k100} by a factor of two.

Also note the calculation for equivalent values:

$$M_{2k,eq*} = \sqrt[3]{\frac{|n_{2m,1*}| \cdot t_{1*} \cdot |M_{2k,acc,1*}{}^3| + \ldots + |n_{2m,n*}| \cdot t_{n*} \cdot |M_{2k,acc,n*}{}^3|}{|n_{2m,1*}| \cdot t_{1*} + \ldots + |n_{2m,n*}| \cdot t_{n*}}} \leq M_{2kN}$$

$$F_{2rad,eq*} = \sqrt[3]{\frac{|n_{2m,1*}| \cdot t_{1*} \cdot |F_{2rad,acc,1*}{}^3| + \ldots + |n_{2m,n*}| \cdot t_{n*} \cdot |F_{2rad,acc,n*}{}^3|}{|n_{2m,1*}| \cdot t_{1*} + \ldots + |n_{2m,n*}| \cdot t_{n*}}} \leq F_{2radN}$$

$$F_{2ax,eq*} \leq F_{2axN}$$

The following apply to the bearing service life L_{10h} ($ED_{10} \leq 40\%$):

$L_{10h} > 10000$ h with $1 < M_{2kN}/M_{2k*} < 1.25$

$L_{10h} > 20000$ h with $1.25 < M_{2kN}/M_{2k*} < 1.5$

$L_{10h} > 30000$ h with $1.5 < M_{2kN}/M_{2k*}$

For different duty cycles:

$$L_{10h} > L_{10h(ED_{10}=40\%)} \cdot \frac{40\%}{ED_{10}}$$

4.6.3 Permitted breakdown torques at the gear unit input

For a horizontal mounting position of the motor, verify that the permitted breakdown torque at the gear unit input is not exceeded before installation on a STOBER gear unit. You can find information for how to do that in this chapter.

Calculate the actual breakdown torque as follows:

$M_{1k*} = F_{1k*} \bullet l_{sp} \leq M_{1k}$

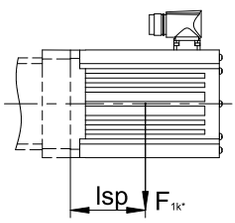

Type	M_{1k} [Nm]
PHQ431_ME	40
PHQ432_ME	20
PHQ531_ME	80
PHQ532_ME	40
PHQ731_ME	200
PHQ732_ME	80
PHQ733_ME	40
PHQ831_ME	400
PHQ832_ME	200
PHQ833_ME	80
PHQ932_ME	400
PHQ933_ME	200
PHQ1032_ME	800
PHQ1033_ME	400
PHQ1132_ME	1200
PHQ1133_ME	400
PHQ1232_ME	1800
PHQ1233_ME	800

The values also apply to the MEL, MF and MFL motor adapters.

4.6.4 Recommendation for radial shaft seal rings

For a duty cycle > 60% and higher surrounding temperatures, we recommend radial shaft seal rings made of FKM at the output.

Properties:

- Excellent temperature resistance
- High chemical stability
- Very good resistance to aging
- Excellent resistance in oils and greases
- For use in the food, beverage and pharmaceutical industries

Leak-proofness

Our gear units are equipped with high-quality radial shaft seal rings and checked for leaks. However, a leak cannot be fully ruled out over the length of use of a gear unit. If you use a gear unit with goods incompatible with the lubricant, you must take measures to prevent direct contact with the gear unit lubricant in case of a leak.

4.6.5 Reverse operation

To ensure lubrication for circulating gearing parts during cyclic reverse operation from ± 20° to ± 90° at the output, pay careful attention to the position of the output shaft for the horizontal mounting of the gear unit, as shown in the diagrams below.

The images show the center position of reverse operation.

Cyclic reverse operation ≤ ± 20° on request.

PHQ4 – PHQ12

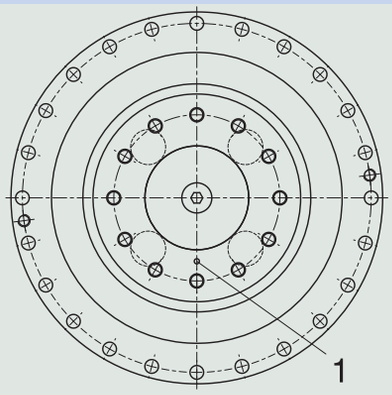

1 Position of the mark: bottom

Please note that the hole pattern may be different, depending on the size of the planetary gear unit.

4.7 Additional documentation

Additional documentation related to the product can be found at
http://www.stoeber.de/en/downloads/

Enter the ID of the documentation in the Search... field.

Documentation	ID
Operating manual for P/PE/PH/PHQ/PHV planetary gear units and planetary geared motors	443149_en
Operating manual for explosion-proof P/PA/PE/PH/PHA/PHQ/PHQA/PHV/PHVA planetary gear units	443030_en
Information explosion-proof gear units	441677_en

5 PHV planetary gear units

Table of contents

5.1 Overview 76

5.2 Selection tables 77

5.3 Dimensional drawings 78

5.4 Type designation 79

5.4.1 Nameplate 80

5.5 Product description 80

5.5.1 Input options 80

5.5.2 Motor adapter with EasyAdapt coupling (ME/MEL) 81

5.5.3 Installation conditions 81

5.5.4 Lubricants 81

5.5.5 Other product features 81

5.5.6 Direction of rotation 82

5.6 Project configuration 82

5.6.1 Drive selection 83

5.6.2 Permitted shaft loads for the output shaft 85

5.6.3 Permitted breakdown torques at the gear unit input 86

5.6.4 Recommendation for radial shaft seal rings 86

5.6.5 Reverse operation 87

5.7 Additional documentation 87

5 Planetary gear units

PHV

5.1 Overview

High-performance precision planetary gear units

Features

Power density	★★★★☆
Backlash	★★★★☆
Price category	€€€
Shaft load	★★★★★
Smooth operation	★★★★☆
Torsional stiffness	★★★★☆
Mass moment of inertia	★★★★☆
Helical gearing	✓
Maintenance-free	✓
Any mounting position	✓
Continuous operation without cooling	✓
Stiff output bearings due to pretension	✓
Easy and reliable attachment to any synchronous servo motor	✓

Key ★☆☆☆☆ good | ★★★★★ excellent
€ Economy | €€€€€ Premium

Technical data

i	61 – 121
M_{2acc}	4250 – 7500 Nm
$\Delta\phi_2$	3 arcmin
η_{get}	90 %

5.2 Selection tables

The technical data specified in the selection tables applies to:

- Installation altitudes up to 1000 m above sea level
- Surrounding temperatures from 0 °C to 40 °C
- Without consideration for thermal limiting performance

You can find the mass moment of inertia J_1 for smaller motor shaft diameters and all other technical data at http://configurator.stoeber.de.

An explanation of the formula symbols can be found in the chapter [▸ 18.1].

i	Type	n_{1MAXDB} [rpm]	n_{1MAXZB} [rpm]	d_{MW} [mm]	J_1 [kgcm²]	m [kg]	$\Delta\varphi_2$ [arcmin]	C_2 [Nm/arcmin]	L_{pA} [dB(A)]	M_{2N} [Nm]	M_{2acc} [Nm]	M_{2NOT} [Nm]
PHV933 ($M_{2acc,max}$ = 4250 Nm)												
61.00	PHV933_0610 ME	2500	4500	≤38	10	63	3.0	845	62	2500	4250	9000
61.00	PHV933_0610 MEL	2500	4500	≤48	22	67	3.0	848	62	2500	4250	9000
91.00	PHV933_0910 ME	2500	4500	≤38	8.7	63	3.0	836	62	2500	4250	9000
91.00	PHV933_0910 MEL	2500	4500	≤48	18	67	3.0	837	62	2500	4250	9000
121.0	PHV933_1210 ME	2500	4500	≤38	7.7	63	3.0	804	62	2500	4250	9000
121.0	PHV933_1210 MEL	2500	4500	≤48	17	67	3.0	804	62	2500	4250	9000
PHV1033 ($M_{2acc,max}$ = 7500 Nm)												
61.00	PHV1033_0610 ME	2500	4500	≤48	24	90	3.0	1364	63	4000	7500	15000
61.00	PHV1033_0610 MEL	2500	4500	≤55	55	95	3.0	1368	63	4000	7500	15000
91.00	PHV1033_0910 ME	2500	4500	≤48	19	90	3.0	1339	63	4000	7500	15000
91.00	PHV1033_0910 MEL	2500	4500	≤55	51	95	3.0	1341	63	4000	7500	15000

5.3 Dimensional drawings

In this chapter, you can find the dimensions of the gear units as well as example dimensions of the mountable motor adapters.

Dimensions can exceed the specifications of ISO 2768-mK due to casting tolerances or accumulation of individual tolerances.

We reserve the right to make dimensional changes due to ongoing technical development.

You can download 3D models of our standard drives at http://configurator.stoeber.de.

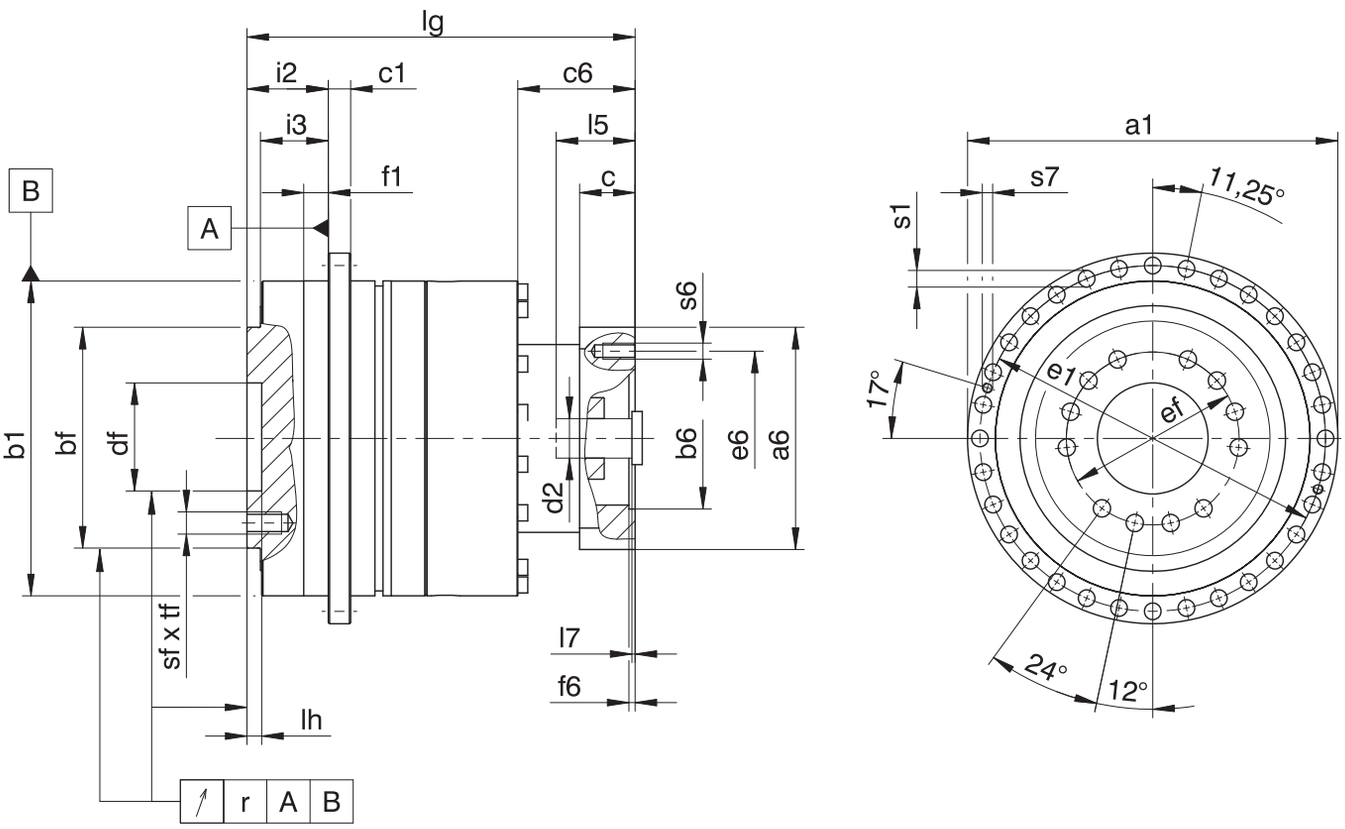

Dimensions of gear units

Type	Øa1	Øb1	Øbf	c1	Ødf	Øe1	Øef	f1	i2	i3	lh	r	Øs1	s7	sf	tf
PHV933	300	255_{h7}	180_{h7}	18	90^{H6}	280	140	20	66	55	12	0.030	13.5	M8	M16	24
PHV1033	330	285_{h7}	200_{h7}	20	95^{H6}	310	160	20	75	60	10	0.040	13.5	M10	M20	30

Example dimensions for the motor connection + total length

Type	Øb6	Øe6	Ød2max	l5	□a6	c	c6	f6	l7	lg	s6
PHV933_ME	130^{H7}	165	38	61	150	26	76	5.5	4.5	295.5	M10
PHV1033_ME	180^{H7}	215	48	81	204	35	92	5.5	5.0	342.0	M12

In the table above, you will find example dimensions for the motor connection for the ME motor adapter. **Note that when dimension c is lengthened (depending on the motor used), dimensions c6, l5 and lg are also lengthened accordingly.**

You will find additional motor connection dimensions for motor adapters ME and MEL in our STOBER Configurator at http://configurator.stoeber.de. Here, you can directly download a 3D model of your drive.

5.4 Type designation

This chapter shows you an explanation of the type designation with the associated options.

Additional ordering information not included in the type designation can be found at the end of the chapter.

Example code

PHV	9	3	3	F	0910	ME

Explanation

Code	Designation	Design
PHV	Type	Planetary gear unit
9	Size	9 (example)
3	Generation	Generation 3
3	Stages	Three-stage
F	Shaft	Flange shaft
0910	Transmission ratio (i x 10)	i = 91 (example)
ME	Motor adapter	Motor adapter with EasyAdapt coupling
MEL		Motor adapter with EasyAdapt coupling for large motors
MB[1]		ServoStop motor adapter with brake

In order to complete the type designation, also specify:

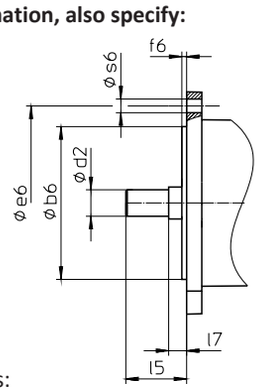

- Motor type or motor dimensions:

  To choose a suitable motor connection, use the STOBER Configurator at http://configurator.stoeber.de and choose your motor or the dimensions of the motor connection.
- Radial shaft seal rings at the output made of NBR or FKM (option), see the chapter [▸ 5.6.4]
- Reverse operation of the output shaft from ±20° to ±90° and horizontal installation, note the chapter [▸ 5.6.5]
- Socket wrench insert for mounting the motor on the gear unit using the ME/MEL motor adapter (optional)

[1] You can find more details in the catalog for ServoStop servo gear unit with brake ID 443234.

5.4.1 Nameplate

An example gear unit nameplate is explained in the figure below.

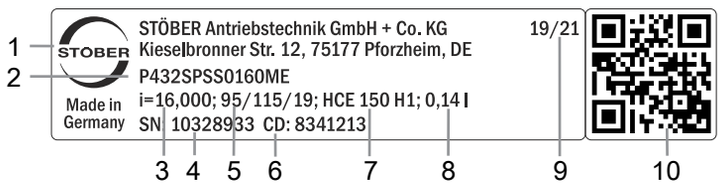

Code	Designation
1	Name of manufacturer
2	Type designation
3	Gear ratio of the gear unit
4	Serial number of the gear unit
5	Dimensions of the motor adapter (diameter of pilot/bolt circle/motor shaft)
6	Customer-specific data
7	Lubricant specification
8	Lubricant fill volume
9	Date of manufacture (year/calendar week)
10	QR code (link to product information)

5.4.1.1 Supporting documents

You can view or download supporting documents for the product by reading off the serial number on the nameplate of the product and entering it at the following address online:
https://id.stober.com

Alternatively, you can use a suitable mobile device to scan in the QR code on the nameplate of the product in order to be linked to the supporting documents.

5.5 Product description

5.5.1 Input options

Motor adapter for attaching synchronous servo motors

http://www.stoeber.de/en/PHVME

EZ synchronous servo motor

http://www.stoeber.de/en/PHVEZ

5.5.2 Motor adapter with EasyAdapt coupling (ME/MEL)

In this chapter, you will find a description of the EasyAdapt coupling.

Properties:

- Fast and easy motor attachment
- One-piece, rugged clamp coupling with expanding function
- Lowest mass moments of inertia for the highest dynamics
- Balanced for smooth running without vibration, even at high speeds
- Large motor shaft diameter range
- Error-free, thanks to exact centering of the motor
- For reduced backlash, the motor shaft bearing must have an axially backlash-free design

Fig. 1: EasyAdapt coupling

5.5.3 Installation conditions

The torque and force values listed in this catalog are valid under the following conditions:

- When the flange shaft and gear housing are fastened on the machine side using screws of strength class 12.9
- When the gear housings are adjusted at pilot øb1. The machine-side fit must be H7.
- When the flange shaft is adjusted using the connecting element at pilot øbf or ødf

5.5.4 Lubricants

STOBER fills the gear units with the amount and type of lubricant specified on the nameplate.

You will receive lubricants for use in the food industry upon request.

5.5.5 Other product features

Feature	Value
Max. permitted gear unit temperature (on the surface of the gear unit)	≤ 90 °C
Paint	Black RAL 9005
Explosion-proof design in accordance with (ATEX) Directive 2014/34/EU (optional)	Available, see Document ID 441677_en
Efficiency: η_{get} three-stage	 90%
Protection class: [2]	IP65

[2] Observe the protection class of all the components.

5.5.6 Direction of rotation

The input and output rotate in the same direction.

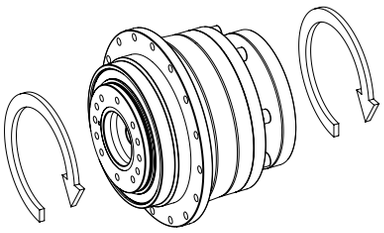

5.6 Project configuration

Project your drives using our SERVOsoft designing software. Download SERVOsoft for free at https://www.stoeber.de/en/ServoSoft.

Observe the limit conditions in this chapter to ensure a safe design for your drives.

An explanation of the formula symbols can be found in the chapter [▸ 18.1].

5.6.1 Drive selection

The formula symbols for values actually present in the application are marked with *.

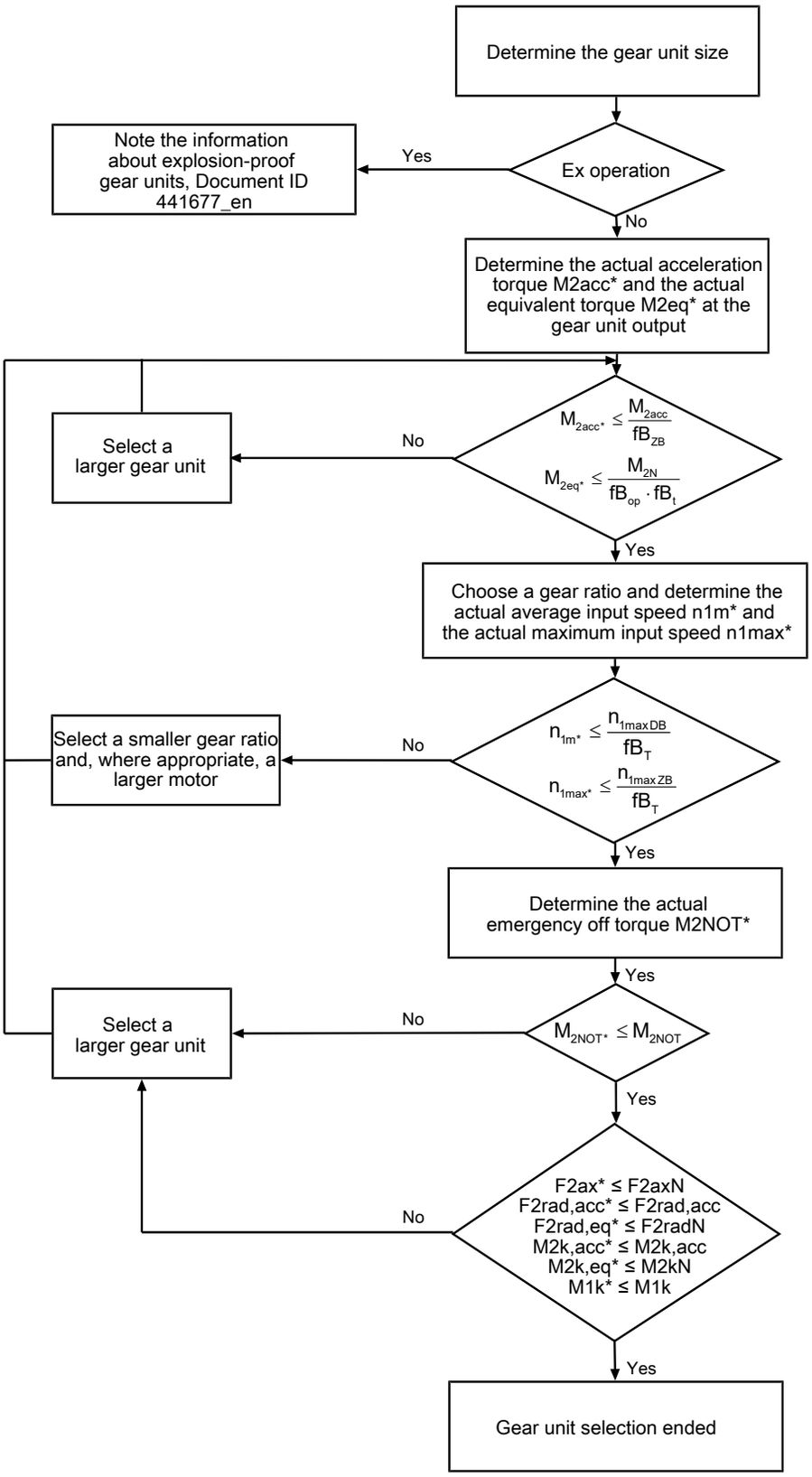

Calculate the forces and tilting torques in the chapter Permitted shaft loads.

The values for i, n_{1maxDB}, n_{1maxZB}, M_{2acc}, M_{2NOT} and M_{2N} can be found in the selection tables.

The values for fB_T, fB_{op}, fB_t and fB_{ZB} can be found in the corresponding tables in this chapter.

Example of cyclic operation

The following calculations are based on a representation of the power taken from the output based in accordance with the following example:

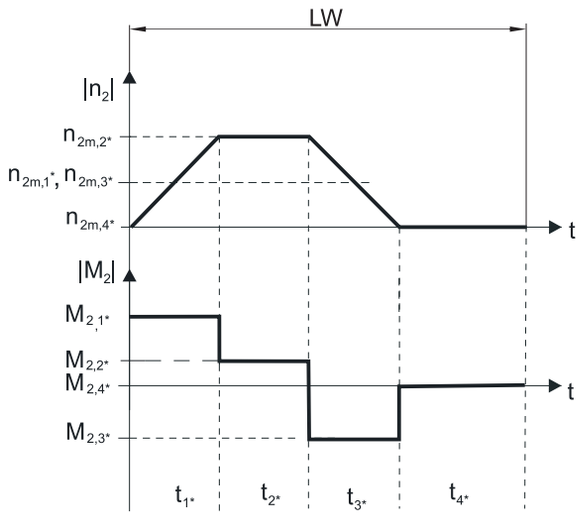

Calculation of the actual maximum acceleration torque

$$M_{2acc*} = J_{tot} \cdot \frac{\Delta n_2}{9.55 \cdot \Delta t} + M_{L*}$$

Calculation of the actual average input speed

$$n_{1m*} = n_{2m*} \cdot i$$

$$n_{2m*} = \frac{|n_{2m,1*}| \cdot t_{1*} + \ldots + |n_{2m,n*}| \cdot t_{n*}}{t_{1*} + \ldots + t_{n*}}$$

If $t_{1*} + \ldots + t_{3*} \geq 6$ min, calculate n_{2m*} without the rest phase t_{4*}.

The values for the ratio i can be found in the selection tables.

Calculation of the actual emergency-off torque

$$M_{2NOT*} = J_{tot} \cdot \frac{\Delta n_2}{9.55 \cdot \Delta t} + M_{L*}$$

Calculation of the actual equivalent torque

$$M_{2eq*} = \sqrt[3]{\frac{|n_{2m,1*}| \cdot t_{1*} \cdot |M_{2,1*}{}^3| + \ldots + |n_{2m,n*}| \cdot t_{n*} \cdot |M_{2,n*}{}^3|}{|n_{2m,1*}| \cdot t_{1*} + \ldots + |n_{2m,n*}| \cdot t_{n*}}}$$

Operating factors

Operating mode	fB_{op}
Uniform continuous operation	1.00
Cyclic operation	1.00
Reversing load cyclic operation	1.00

Run time	fB_t
Daily runtime ≤ 8 h	1.00
Daily runtime ≤ 16 h	1.15
Daily runtime ≤ 24 h	1.20

Cyclic operation	fB_{ZB}
≤ 1000 load changes/hour (LW/h)	1.00
> 1000 load changes/hour (LW/h)	1.15

Temperature		fB_T
Motor cooling	**Surrounding temperature**	
Motor with forced ventilation	≤ 20 °C	0.9
	≤ 30 °C	1.0
	≤ 40 °C	1.15
Motor with convection cooling	≤ 20 °C	1.0
	≤ 30 °C	1.1
	≤ 40 °C	1.25

Notes

- The maximum permitted gear unit temperature of ≤ 90 °C must not be exceeded. Doing so may result in damage to the gear unit.

5.6.2 Permitted shaft loads for the output shaft

The values specified in the tables apply to the permitted shaft loads:

- For shaft dimensions in accordance with the catalog
- For output speeds n_{2m*} ≤ 100 rpm ($F^{2axN} = F_{2ax100}$; $F_{2radN} = F_{2rad100}$; $M_{2kN} = M_{2k100}$)
- Only if radial forces on the gear unit are stabilized by its pilots (housing, flange shaft)

Permitted shaft loads

Type	z_2 [mm]	F_{2ax100} [N]	$F_{2rad100}$ [N]	$F_{2rad,acc}$ [N]	M_{2k100} [Nm]	$M_{2k,acc}$ [Nm]	C_{2k} [Nm/ arcmin]
PHV9	155.0	33000	48387	70968	7500	11000	7500
PHV10	171.0	50000	51462	73099	8800	12500	9500

For other output speeds, download diagrams at http://configurator.stoeber.de.

The following applies to output speeds n_{2m*} > 100 rpm:

$$F_{2axN} = \frac{F_{2ax100}}{\sqrt[3]{\frac{n_{2m*}}{100\ \text{rpm}}}} \qquad F_{2radN} = \frac{F_{2rad100}}{\sqrt[3]{\frac{n_{2m*}}{100\ \text{rpm}}}} \qquad M_{2kN} = \frac{M_{2k100}}{\sqrt[3]{\frac{n_{2m*}}{100\ \text{rpm}}}}$$

The values for F_{2ax100}, $F_{2rad100}$ and M_{2k100} can be found in the table "Permitted shaft loads" in this chapter.

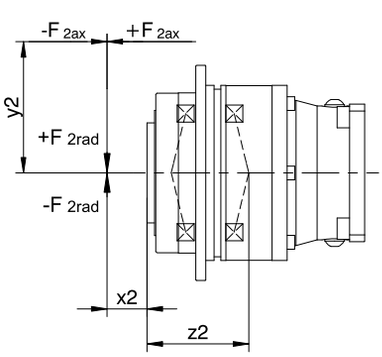

Fig. 2: Force application points

You can determine the permitted radial forces from the permitted breakdown torque M_{2kN} and $M_{2k,acc}$. The actual radial forces may not exceed the permitted radial forces. The permitted radial forces pertain to the shaft end (x2 = 0).

$$M_{2k,acc*} = \frac{2 \cdot F_{2ax*} \cdot y_2 + F_{2rad,acc*} \cdot (x_2 + z_2)}{1000} \leq M_{2k,acc}$$

For applications with multiple axial and/or radial forces, you must add the forces as vectors.

In the event of EMERGENCY OFF operation (max. 1000 load changes), you can multiply the permitted forces and torques for F_{2ax100}, $F_{2rad100}$ and M_{2k100} by a factor of two.

Also note the calculation for equivalent values:

$$M_{2k,eq^*} = \sqrt[3]{\frac{\left|n_{2m,1^*}\right| \cdot t_{1^*} \cdot \left|M_{2k,acc,1^*}{}^3\right| + \ldots + \left|n_{2m,n^*}\right| \cdot t_{n^*} \cdot \left|M_{2k,acc,n^*}{}^3\right|}{\left|n_{2m,1^*}\right| \cdot t_{1^*} + \ldots + \left|n_{2m,n^*}\right| \cdot t_{n^*}}} \leq M_{2kN}$$

$$F_{2rad,eq^*} = \sqrt[3]{\frac{\left|n_{2m,1^*}\right| \cdot t_{1^*} \cdot \left|F_{2rad,acc,1^*}{}^3\right| + \ldots + \left|n_{2m,n^*}\right| \cdot t_{n^*} \cdot \left|F_{2rad,acc,n^*}{}^3\right|}{\left|n_{2m,1^*}\right| \cdot t_{1^*} + \ldots + \left|n_{2m,n^*}\right| \cdot t_{n^*}}} \leq F_{2radN}$$

$$F_{2ax,eq^*} \leq F_{2axN}$$

The following apply to the bearing service life L_{10h} (ED_{10} ≤ 40%):

L_{10h} > 10000 h with 1 < M_{2kN}/M_{2k^*} < 1.25

L_{10h} > 20000 h with 1.25 < M_{2kN}/M_{2k^*} < 1.5

L_{10h} > 30000 h with 1.5 < M_{2kN}/M_{2k^*}

For different duty cycles:

$$L_{10h} > L_{10h(ED_{10}=40\%)} \cdot \frac{40\%}{ED_{10}}$$

5.6.3 Permitted breakdown torques at the gear unit input

For a horizontal mounting position of the motor, verify that the permitted breakdown torque at the gear unit input is not exceeded before installation on a STOBER gear unit. You can find information for how to do that in this chapter.

Calculate the actual breakdown torque as follows:

$M_{1k^*} = F_{1k^*} \bullet l_{sp} \leq M_{1k}$

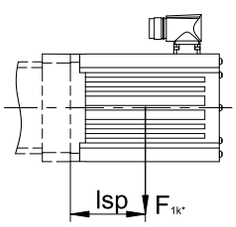

Type	M_{1k} [Nm]
PHV933_ME	200
PHV1033_ME	400

The values also apply to the MEL motor adapter.

5.6.4 Recommendation for radial shaft seal rings

For a duty cycle > 60% and higher surrounding temperatures, we recommend radial shaft seal rings made of FKM at the output.

Properties:

- Excellent temperature resistance
- High chemical stability
- Very good resistance to aging
- Excellent resistance in oils and greases
- For use in the food, beverage and pharmaceutical industries

Leak-proofness

Our gear units are equipped with high-quality radial shaft seal rings and checked for leaks. However, a leak cannot be fully ruled out over the length of use of a gear unit. If you use a gear unit with goods incompatible with the lubricant, you must take measures to prevent direct contact with the gear unit lubricant in case of a leak.

5.6.5 Reverse operation

To ensure lubrication for circulating gearing parts during cyclic reverse operation from ± 20° to ± 90° at the output, pay careful attention to the position of the output shaft for the horizontal mounting of the gear unit, as shown in the diagrams below.

The images show the center position of reverse operation.

Cyclic reverse operation ≤ ± 20° on request.

Size 9 – 10

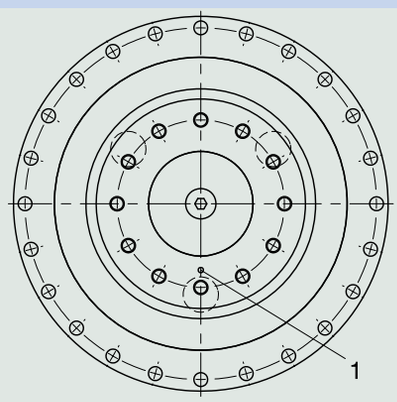

1 Position of the mark: bottom

Please note that the hole pattern may be different, depending on the size of the planetary gear unit.

5.7 Additional documentation

Additional documentation related to the product can be found at
http://www.stoeber.de/en/downloads/

Enter the ID of the documentation in the Search... field.

Documentation	ID
Operating manual for P/PE/PH/PHQ/PHV planetary gear units and planetary geared motors	443149_en
Operating manual for explosion-proof P/PA/PE/PH/PHA/PHQ/PHQA/PHV/PHVA planetary gear units	443030_en
Information explosion-proof gear units	441677_en

6 PE planetary gear units

Table of contents

6.1 Overview 90

6.2 Selection tables 91

6.3 Dimensional drawings 93

6.3.1 P shaft design (solid shaft with feather key) 94

6.4 Type designation 95

6.4.1 Nameplate 96

6.5 Product description 96

6.5.1 Input options 96

6.5.2 Motor adapter with EasyAdapt coupling (ME/MEL) 97

6.5.3 Installation conditions 97

6.5.4 Lubricants 97

6.5.5 Other product features 97

6.5.6 Direction of rotation 98

6.6 Project configuration 98

6.6.1 Drive selection 99

6.6.2 Permitted shaft loads for the output shaft 101

6.6.3 Permitted breakdown torques at the gear unit input 102

6.6.4 Tightness 103

6.7 Additional documentation 103

6 Planetary gear units

PE

6.1 Overview

Cost-efficient, helical-geared planetary gear units

Features

Power density	★★★☆☆
Backlash	★★★☆☆
Price category	€
Shaft load	★★☆☆☆
Smooth operation	★★★☆☆
Torsional stiffness	★★★☆☆
Mass moment of inertia	★★★★☆
Helical gearing	✓
Maintenance-free	✓
Any mounting position	✓
Non-contact sealing at the input	✓
Easy and reliable attachment to any synchronous servo motor	✓

Key ★☆☆☆☆ good | ★★★★★ excellent
€ Economy | €€€€€ Premium

Technical data

i	3 – 100
M_{2acc}	17 – 250 Nm
$\Delta\phi_2$	8 – 13 arcmin
η_{get}	95 – 97 %

6.2 Selection tables

The technical data specified in the selection tables applies to:

- Installation altitudes up to 1000 m above sea level
- Surrounding temperatures from 0 °C to 40 °C
- Without consideration for thermal limiting performance

You can find the mass moment of inertia J_1 for smaller motor shaft diameters and all other technical data at http://configurator.stoeber.de.

An explanation of the formula symbols can be found in the chapter [▸ 18.1].

i	Type	n_{1MAXDB} [rpm]	n_{1MAXZB} [rpm]	d_{MW} [mm]	J_1 [kgcm²]	m [kg]	$\Delta\varphi_2$ [arcmin]	C_2 [Nm/arcmin]	L_{pA} [dB(A)]	M_{2N} [Nm]	M_{2acc} [Nm]	M_{2NOT} [Nm]
PE221 ($M_{2acc,max}$ = 20 Nm)												
4.000	PE221_0040 ME	4000	8000	≤14	0.12	0.9	10.0	1.4	60	8.0	20	32
4.000	PE221_0040 MEL	4000	8000	≤19	0.41	1.3	10.0	1.4	60	8.0	20	32
5.000	PE221_0050 ME	4000	8000	≤14	0.11	0.9	10.0	1.4	58	8.0	20	32
5.000	PE221_0050 MEL	4000	8000	≤19	0.40	1.3	10.0	1.4	58	8.0	20	32
7.000	PE221_0070 ME	4500	8000	≤14	0.10	0.9	10.0	1.3	56	8.0	18	32
7.000	PE221_0070 MEL	4500	8000	≤19	0.39	1.3	10.0	1.3	56	8.0	18	32
10.00	PE221_0100 ME	4500	8000	≤14	0.10	0.9	10.0	1.2	54	8.0	17	32
10.00	PE221_0100 MEL	4500	8000	≤19	0.39	1.3	10.0	1.2	54	8.0	17	32
PE222 ($M_{2acc,max}$ = 20 Nm)												
16.00	PE222_0160 ME	4000	8000	≤14	0.14	1.4	13.0	1.4	60	10	19	32
16.00	PE222_0160 MEL	4000	8000	≤19	0.42	1.8	13.0	1.4	60	10	19	32
20.00	PE222_0200 ME	4000	8000	≤14	0.12	1.4	13.0	1.4	60	10	20	32
20.00	PE222_0200 MEL	4000	8000	≤19	0.41	1.8	13.0	1.4	60	10	20	32
25.00	PE222_0250 ME	4000	8000	≤14	0.12	1.4	13.0	1.4	59	10	20	32
25.00	PE222_0250 MEL	4000	8000	≤19	0.41	1.8	13.0	1.4	59	10	20	32
28.00	PE222_0280 ME	4000	8000	≤14	0.11	1.4	13.0	1.4	59	10	19	32
28.00	PE222_0280 MEL	4000	8000	≤19	0.40	1.8	13.0	1.4	59	10	19	32
35.00	PE222_0350 ME	4000	8000	≤14	0.11	1.4	13.0	1.4	58	10	20	32
35.00	PE222_0350 MEL	4000	8000	≤19	0.40	1.8	13.0	1.4	58	10	20	32
40.00	PE222_0400 ME	4500	8000	≤14	0.10	1.4	13.0	1.4	58	10	19	32
40.00	PE222_0400 MEL	4500	8000	≤19	0.39	1.8	13.0	1.4	58	10	19	32
50.00	PE222_0500 ME	4500	8000	≤14	0.10	1.4	13.0	1.4	57	10	20	32
50.00	PE222_0500 MEL	4500	8000	≤19	0.39	1.8	13.0	1.4	57	10	20	32
70.00	PE222_0700 ME	4500	8000	≤14	0.10	1.4	13.0	1.3	56	10	18	32
70.00	PE222_0700 MEL	4500	8000	≤19	0.39	1.8	13.0	1.3	56	10	18	32
100.0	PE222_1000 ME	4500	8000	≤14	0.10	1.4	13.0	1.2	55	10	17	32
100.0	PE222_1000 MEL	4500	8000	≤19	0.39	1.8	13.0	1.2	55	10	17	32
PE321 ($M_{2acc,max}$ = 53 Nm)												
3.000	PE321_0030 ME	3500	6000	≤19	0.56	2.0	8.0	3.4	62	21	40	80
3.000	PE321_0030 MEL	3500	6000	≤24	0.99	2.5	8.0	3.4	62	21	40	80
4.000	PE321_0040 ME	3700	7000	≤19	0.47	2.0	8.0	4.3	61	24	46	90
4.000	PE321_0040 MEL	3700	7000	≤24	0.90	2.5	8.0	4.3	61	24	46	90
5.000	PE321_0050 ME	3700	7000	≤19	0.44	2.0	8.0	4.4	59	25	53	90
5.000	PE321_0050 MEL	3700	7000	≤24	0.87	2.5	8.0	4.4	59	25	53	90
7.000	PE321_0070 ME	4000	7000	≤19	0.41	2.0	8.0	4.1	57	26	50	90
7.000	PE321_0070 MEL	4000	7000	≤24	0.84	2.5	8.0	4.1	57	26	50	90
10.00	PE321_0100 ME	4000	7000	≤19	0.40	2.0	8.0	3.7	55	26	48	90
10.00	PE321_0100 MEL	4000	7000	≤24	0.83	2.5	8.0	3.7	55	26	48	90
PE322 ($M_{2acc,max}$ = 50 Nm)												
16.00	PE322_0160 ME	4000	8000	≤14	0.16	2.4	10.0	4.0	61	30	45	90
16.00	PE322_0160 MEL	4000	8000	≤19	0.45	2.8	10.0	4.0	61	30	45	90
20.00	PE322_0200 ME	4000	8000	≤14	0.16	2.4	10.0	4.0	61	30	50	90
20.00	PE322_0200 MEL	4000	8000	≤19	0.44	2.8	10.0	4.0	61	30	50	90
25.00	PE322_0250 ME	4000	8000	≤14	0.13	2.4	10.0	4.2	60	30	50	90
25.00	PE322_0250 MEL	4000	8000	≤19	0.42	2.8	10.0	4.2	60	30	50	90
28.00	PE322_0280 ME	4000	8000	≤14	0.12	2.4	10.0	4.0	60	30	44	88
28.00	PE322_0280 MEL	4000	8000	≤19	0.40	2.8	10.0	4.0	60	30	44	88
35.00	PE322_0350 ME	4000	8000	≤14	0.11	2.4	10.0	4.2	59	30	50	90
35.00	PE322_0350 MEL	4000	8000	≤19	0.40	2.8	10.0	4.2	59	30	50	90
40.00	PE322_0400 ME	4500	8000	≤14	0.10	2.4	10.0	3.9	59	30	44	88
40.00	PE322_0400 MEL	4500	8000	≤19	0.39	2.8	10.0	3.9	59	30	44	88
50.00	PE322_0500 ME	4500	8000	≤14	0.10	2.4	10.0	4.1	58	30	50	90
50.00	PE322_0500 MEL	4500	8000	≤19	0.39	2.8	10.0	4.1	58	30	50	90
70.00	PE322_0700 ME	4500	8000	≤14	0.10	2.4	10.0	4.0	57	30	50	90

i	Type	n_{1MAXDB} [rpm]	n_{1MAXZB} [rpm]	d_{MW} [mm]	J_1 [kgcm²]	m [kg]	$\Delta\varphi_2$ [arcmin]	C_2 [Nm/arcmin]	L_{pA} [dB(A)]	M_{2N} [Nm]	M_{2acc} [Nm]	M_{2NOT} [Nm]
PE322 ($M_{2acc,max}$ = 50 Nm)												
70.00	PE322_0700 MEL	4500	8000	≤19	0.39	2.8	10.0	4.0	57	30	50	90
100.0	PE322_1000 ME	4500	8000	≤14	0.10	2.4	10.0	3.6	56	30	48	90
100.0	PE322_1000 MEL	4500	8000	≤19	0.39	2.8	10.0	3.6	56	30	48	90
PE421 ($M_{2acc,max}$ = 109 Nm)												
3.000	PE421_0030 ME	3000	5500	≤24	1.4	3.8	8.0	12	64	45	90	180
3.000	PE421_0030 MEL	3000	5500	≤32	3.0	4.7	8.0	12	64	45	90	180
4.000	PE421_0040 ME	3400	6000	≤24	1.1	3.8	8.0	14	63	55	100	200
4.000	PE421_0040 MEL	3400	6000	≤32	2.7	4.7	8.0	14	63	55	100	200
5.000	PE421_0050 ME	3400	6000	≤24	1.0	3.8	8.0	14	61	56	109	200
5.000	PE421_0050 MEL	3400	6000	≤32	2.6	4.7	8.0	14	61	56	109	200
7.000	PE421_0070 ME	3600	6000	≤24	0.91	3.8	8.0	12	59	60	100	200
7.000	PE421_0070 MEL	3600	6000	≤32	2.5	4.7	8.0	12	59	60	100	200
10.00	PE421_0100 ME	3600	6000	≤24	0.87	3.8	8.0	10	57	60	92	184
10.00	PE421_0100 MEL	3600	6000	≤32	2.5	4.7	8.0	10	57	60	92	184
PE422 ($M_{2acc,max}$ = 104 Nm)												
16.00	PE422_0160 ME	3700	7000	≤19	0.52	4.6	10.0	13	63	65	95	190
16.00	PE422_0160 MEL	3700	7000	≤24	0.95	5.1	10.0	13	63	65	95	190
20.00	PE422_0200 ME	3700	7000	≤19	0.51	4.6	10.0	13	63	65	104	200
20.00	PE422_0200 MEL	3700	7000	≤24	0.94	5.1	10.0	13	63	65	104	200
25.00	PE422_0250 ME	3700	7000	≤19	0.47	4.6	10.0	13	62	65	103	200
25.00	PE422_0250 MEL	3700	7000	≤24	0.90	5.1	10.0	13	62	65	103	200
28.00	PE422_0280 ME	4000	7000	≤19	0.43	4.6	10.0	13	62	65	95	190
28.00	PE422_0280 MEL	4000	7000	≤24	0.86	5.1	10.0	13	62	65	95	190
35.00	PE422_0350 ME	4000	7000	≤19	0.42	4.6	10.0	13	61	65	103	200
35.00	PE422_0350 MEL	4000	7000	≤24	0.85	5.1	10.0	13	61	65	103	200
40.00	PE422_0400 ME	4000	7000	≤19	0.41	4.6	10.0	13	61	65	95	190
40.00	PE422_0400 MEL	4000	7000	≤24	0.84	5.1	10.0	13	61	65	95	190
50.00	PE422_0500 ME	4000	7000	≤19	0.41	4.6	10.0	13	60	65	102	200
50.00	PE422_0500 MEL	4000	7000	≤24	0.83	5.1	10.0	13	60	65	102	200
70.00	PE422_0700 ME	4000	7000	≤19	0.42	4.6	10.0	10	59	65	90	180
70.00	PE422_0700 MEL	4000	7000	≤24	0.85	5.1	10.0	10	59	65	90	180
100.0	PE422_1000 ME	4000	7000	≤19	0.40	4.6	10.0	10	58	65	90	180
100.0	PE422_1000 MEL	4000	7000	≤24	0.83	5.1	10.0	10	58	65	90	180
PE521 ($M_{2acc,max}$ = 250 Nm)												
3.000	PE521_0030 ME	2500	4500	≤32	4.4	7.7	8.0	31	65	90	180	360
3.000	PE521_0030 MEL	2500	4500	≤38	7.9	8.8	8.0	31	65	90	180	360
4.000	PE521_0040 ME	2600	5000	≤32	3.5	7.7	8.0	35	64	130	250	500
4.000	PE521_0040 MEL	2600	5000	≤38	7.0	8.8	8.0	35	64	130	250	500
5.000	PE521_0050 ME	2600	5000	≤32	3.1	7.7	8.0	35	62	130	250	500
5.000	PE521_0050 MEL	2600	5000	≤38	6.6	8.8	8.0	35	62	130	250	500
7.000	PE521_0070 ME	2800	5000	≤32	2.8	7.7	8.0	32	60	130	250	500
7.000	PE521_0070 MEL	2800	5000	≤38	6.3	8.8	8.0	32	60	130	250	500
10.00	PE521_0100 ME	3000	5000	≤32	2.7	7.7	8.0	27	58	130	220	440
10.00	PE521_0100 MEL	3000	5000	≤38	6.2	8.8	8.0	27	58	130	220	440
PE522 ($M_{2acc,max}$ = 250 Nm)												
16.00	PE522_0160 ME	3400	6000	≤24	1.2	9.1	10.0	33	64	160	240	480
16.00	PE522_0160 MEL	3400	6000	≤32	2.8	10	10.0	33	64	160	240	480
20.00	PE522_0200 ME	3400	6000	≤24	1.2	9.1	10.0	33	64	160	250	500
20.00	PE522_0200 MEL	3400	6000	≤32	2.8	10	10.0	33	64	160	250	500
25.00	PE522_0250 ME	3400	6000	≤24	1.0	9.1	10.0	33	63	160	250	500
25.00	PE522_0250 MEL	3400	6000	≤32	2.7	10	10.0	33	63	160	250	500
28.00	PE522_0280 ME	3600	6000	≤24	0.95	9.1	10.0	33	63	160	240	480
28.00	PE522_0280 MEL	3600	6000	≤32	2.6	10	10.0	33	63	160	240	480
35.00	PE522_0350 ME	3600	6000	≤24	0.94	9.1	10.0	33	62	160	250	500
35.00	PE522_0350 MEL	3600	6000	≤32	2.5	10	10.0	33	62	160	250	500
40.00	PE522_0400 ME	3600	6000	≤24	0.89	9.1	10.0	33	62	160	240	480
40.00	PE522_0400 MEL	3600	6000	≤32	2.5	10	10.0	33	62	160	240	480
50.00	PE522_0500 ME	3600	6000	≤24	0.89	9.1	10.0	33	61	160	250	500
50.00	PE522_0500 MEL	3600	6000	≤32	2.5	10	10.0	33	61	160	250	500
70.00	PE522_0700 ME	3600	6000	≤24	0.93	9.1	10.0	27	60	160	220	440
70.00	PE522_0700 MEL	3600	6000	≤32	2.5	10	10.0	27	60	160	220	440
100.0	PE522_1000 ME	3600	6000	≤24	0.88	9.1	10.0	27	59	160	220	440
100.0	PE522_1000 MEL	3600	6000	≤32	2.5	10	10.0	27	59	160	220	440

6.3 Dimensional drawings

In this chapter, you can find the dimensions of the gear units as well as example dimensions of the mountable motor adapters.

Dimensions can exceed the specifications of ISO 2768-mK due to casting tolerances or accumulation of individual tolerances.

We reserve the right to make dimensional changes due to ongoing technical development.

You can download 3D models of our standard drives at http://configurator.stoeber.de.

Tolerances

Solid shaft	Tolerance
Fit	ISO k6
Feather keys	DIN 6885-1, high form A
Balancing	With half feather key

Centering holes in solid shafts in accordance with DIN 332-2, DR shape

Thread size	M4	M5	M6	M8	M10	M12	M16	M20	M24
Thread depth [mm]	10	12.5	16	19	22	28	36	42	50

6.3.1 P shaft design (solid shaft with feather key)

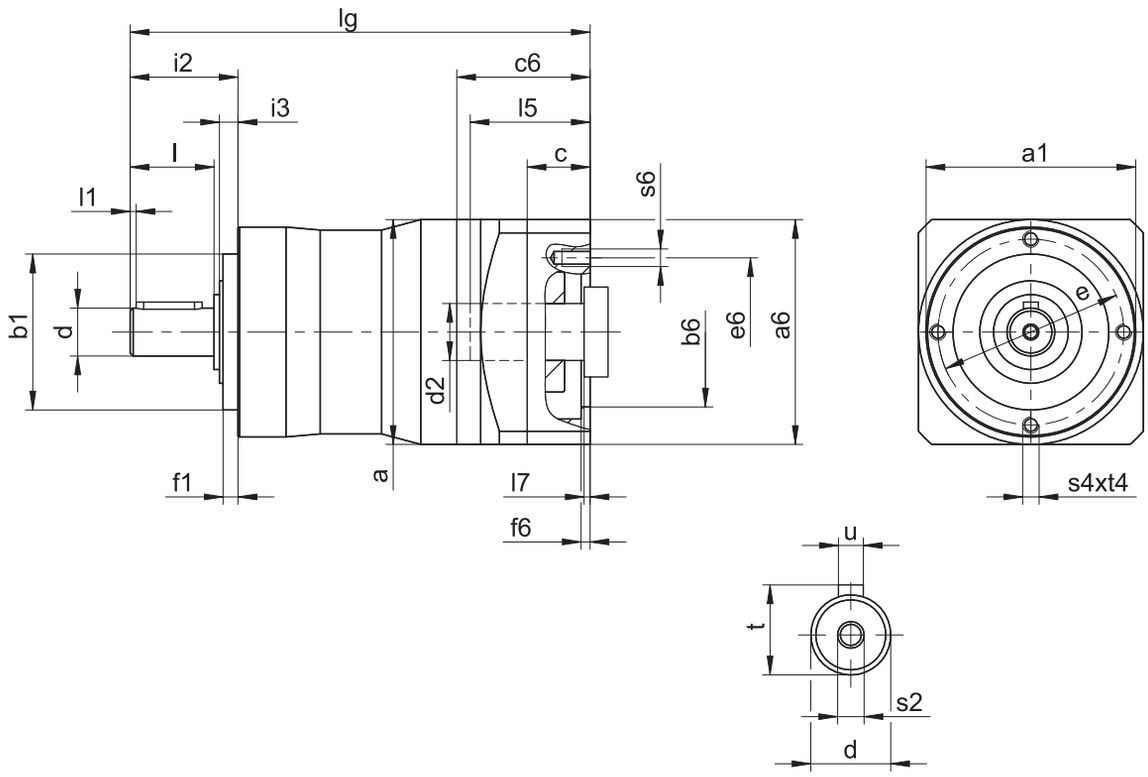

Dimensions of gear units

Type	□a	Øa1	Øb1	Ød	Øe	f1	i2	i3	l	l1	s2	s4	t	t4	u
PE221	55	50	35_{h6}	12_{k6}	44	4	24.5	5.0	18	2	M4	M4	13.5	8	A4×4×14
PE222	55	50	35_{h6}	12_{k6}	44	4	24.5	5.0	18	2	M4	M4	13.5	8	A4×4×14
PE321	75	70	52_{h6}	16_{k6}	62	5	36.0	6.0	28	2	M5	M5	18.0	10	A5×5×22
PE322	75	70	52_{h6}	16_{k6}	62	5	36.0	6.0	28	2	M5	M5	18.0	10	A5×5×22
PE421	100	90	68_{h6}	22_{k6}	80	5	46.0	6.5	36	2	M8	M6	24.5	12	A6×6×32
PE422	100	90	68_{h6}	22_{k6}	80	5	46.0	6.5	36	2	M8	M6	24.5	12	A6×6×32
PE521	120	120	90_{h6}	32_{k6}	108	6	70.0	8.0	58	4	M12	M8	35.0	16	A10×8×50
PE522	120	120	90_{h6}	32_{k6}	108	6	70.0	8.0	58	4	M12	M8	35.0	16	A10×8×50

Example dimensions for the motor connection + total length

Type	Øb6	Øe6	Ød2max	l5	□a6	c	c6	f6	l7	lg	s6
PE221_ME	40^{H7}	63	14	30	55	15	32.0	3.5	3.0	109.5	M5
PE222_ME	40^{H7}	63	14	30	55	15	32.0	3.5	3.0	141.5	M5
PE321_ME	60^{H7}	75	19	41	75	18	41.5	3.5	4.0	150.5	M5
PE322_ME	40^{H7}	63	14	30	55	15	32.0	3.5	3.0	168.0	M5
PE421_ME	95^{H7}	115	24	41	100	21	42.5	4.0	3.5	167.0	M8
PE422_ME	60^{H7}	75	19	41	75	18	41.5	3.5	4.0	204.0	M5
PE521_ME	110^{H7}	130	32	51	120	24	54.0	4.0	4.5	222.0	M8
PE522_ME	95^{H7}	115	24	41	100	21	42.5	4.0	3.5	251.0	M8

In the table above, you will find example dimensions for the motor connection for the ME motor adapter. **Note that when dimension c is lengthened (depending on the motor used), dimensions c6, l5 and lg are also lengthened accordingly.**

You will find additional motor connection dimensions for motor adapters ME and MEL in our STOBER Configurator at http://configurator.stoeber.de. Here, you can directly download a 3D model of your drive.

6.4 Type designation

In this chapter, you can find an explanation of the type designation with the associated options.

Additional ordering information not included in the type designation can be found at the end of the chapter.

Example code

PE	**4**	**2**	**2**	**S**	**P**	**S**	**S**	**0200**	**ME**

Explanation

Code	Designation	Design
PE	Type	Planetary gear unit
4	Size	4 (example)
2	Generation	Generation 2
1 **2**	Stages	Single-stage Two-stage
S	Housing	Standard
P	Shaft	Solid shaft with feather key
S	Bearing	Standard bearing
S	Backlash	Standard
0200	Transmission ratio (i x 10)	i = 20 (example)
ME MEL	Motor adapter	Motor adapter with EasyAdapt coupling Motor adapter with EasyAdapt coupling for large motors

In order to complete the type designation, also specify:

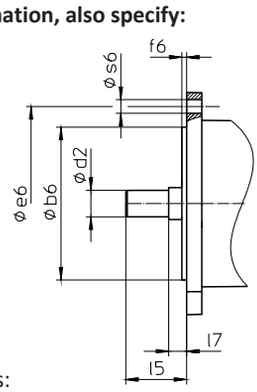

- Motor type or motor dimensions:

  To choose a suitable motor connection, use the STOBER Configurator at http://configurator.stoeber.de and choose your motor or the dimensions of the motor connection.
- Socket wrench insert for mounting the motor on the gear unit using the ME/MEL motor adapter (optional)

6.4.1 Nameplate

An example gear unit nameplate is explained in the figure below.

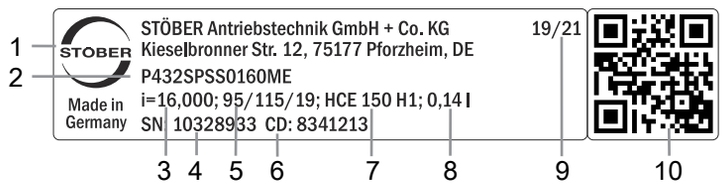

Code	Designation
1	Name of manufacturer
2	Type designation
3	Gear ratio of the gear unit
4	Serial number of the gear unit
5	Dimensions of the motor adapter (diameter of pilot/bolt circle/motor shaft)
6	Customer-specific data
7	Lubricant specification
8	Lubricant fill volume
9	Date of manufacture (year/calendar week)
10	QR code (link to product information)

6.4.1.1 Supporting documents

You can view or download supporting documents for the product by reading off the serial number on the nameplate of the product and entering it at the following address online:
https://id.stober.com

Alternatively, you can use a suitable mobile device to scan in the QR code on the nameplate of the product in order to be linked to the supporting documents.

6.5 Product description

6.5.1 Input options

ME motor adapter for attaching synchronous servo motors

http://www.stoeber.de/en/PEME

EZ synchronous servo motor

http://www.stoeber.de/en/PEEZ

LM Lean motor

http://www.stoeber.de/en/PELM

6.5.2 Motor adapter with EasyAdapt coupling (ME/MEL)

In this chapter, you will find a description of the EasyAdapt coupling.

Properties:

- Fast and easy motor attachment
- One-piece, rugged clamp coupling with expanding function
- Lowest mass moments of inertia for the highest dynamics
- Balanced for smooth running without vibration, even at high speeds
- Large motor shaft diameter range
- Error-free, thanks to exact centering of the motor
- For reduced backlash, the motor shaft bearing must have an axially backlash-free design

Fig. 1: EasyAdapt coupling

6.5.3 Installation conditions

The specified torques and forces only apply when gear units are fastened on the machine side using screws of strength class 10.9. In addition, the gear housings must be adjusted at the pilot. The machine-side fit must be H7.

6.5.4 Lubricants

STOBER fills the gear units with the amount and type of lubricant specified on the nameplate.

You will receive lubricants for use in the food industry upon request.

6.5.5 Other product features

Feature	Value
Max. permitted gear unit temperature (on the surface of the gear unit)	≤ 80 °C
Paint	Black RAL 9005
Explosion-proof design in accordance with (ATEX) Directive 2014/34/EU (optional)	Available, see Document ID 441677_en
Efficiency: η_{get} single-stage η_{get} two-stage	 97% 95%
Protection class: [1]	IP64

[1] Observe the protection class of all the components.

6.5.6 Direction of rotation

The input and output rotate in the same direction.

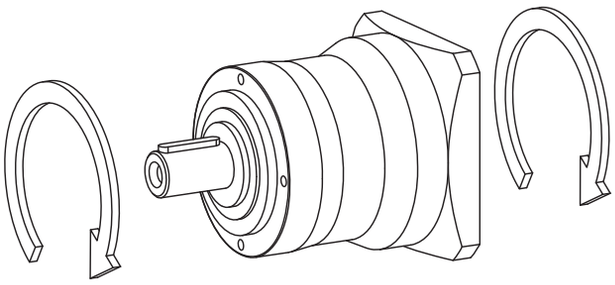

6.6 Project configuration

Project your drives using our SERVOsoft designing software. Download SERVOsoft for free at https://www.stoeber.de/en/ServoSoft.

Observe the limit conditions in this chapter to ensure a safe design for your drives.

An explanation of the formula symbols can be found in the chapter [▸ 18.1].

6.6.1 Drive selection

The formula symbols for values actually present in the application are marked with *.

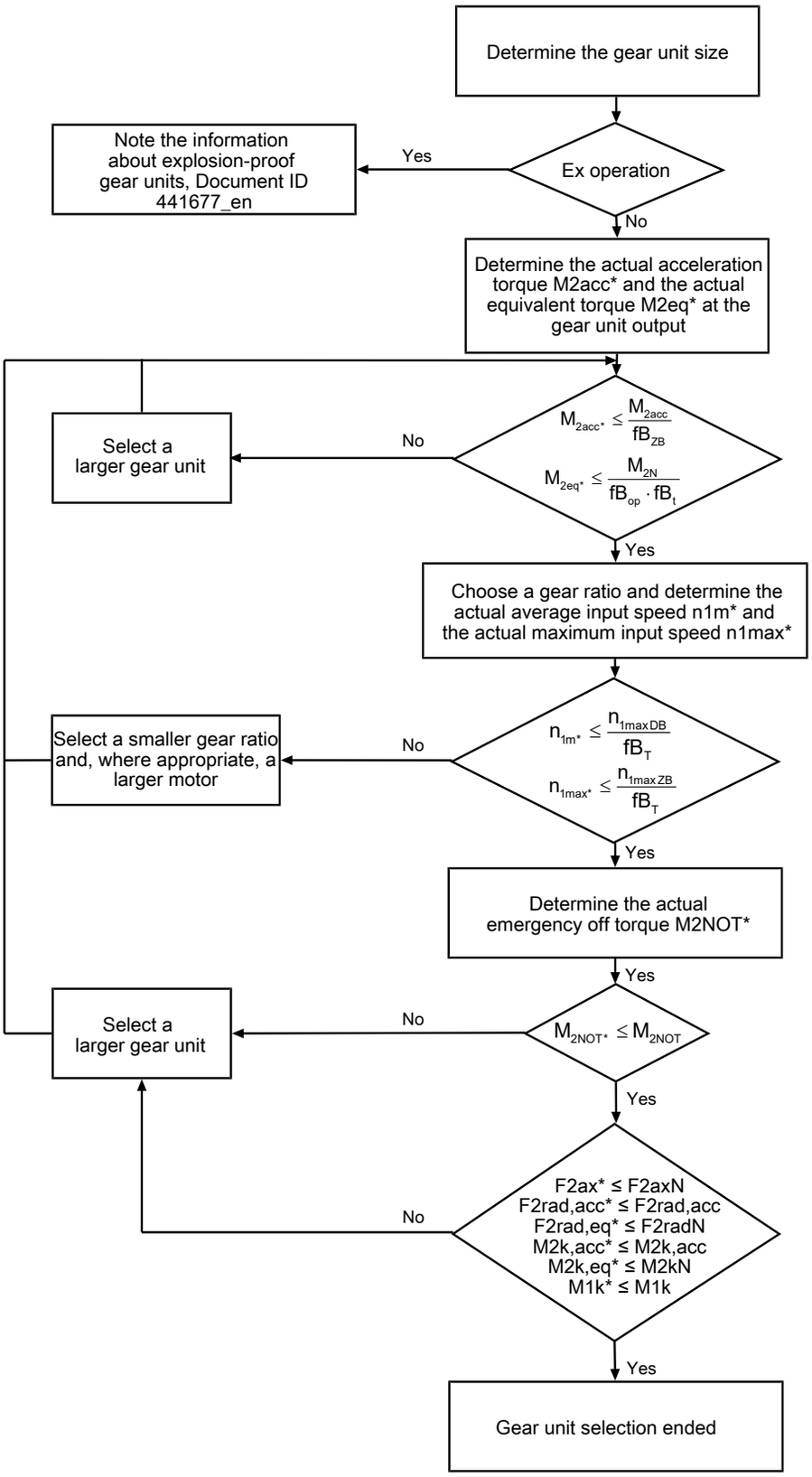

Calculate the forces and tilting torques in the chapter Permitted shaft loads.

The values for i, n_{1maxDB}, n_{1maxZB}, M_{2acc}, M_{2NOT} and M_{2N} can be found in the selection tables.

The values for fB_T, fB_{op}, fB_t and fB_{ZB} can be found in the corresponding tables in this chapter.

Example of cyclic operation

The following calculations are based on a representation of the power taken from the output based in accordance with the following example:

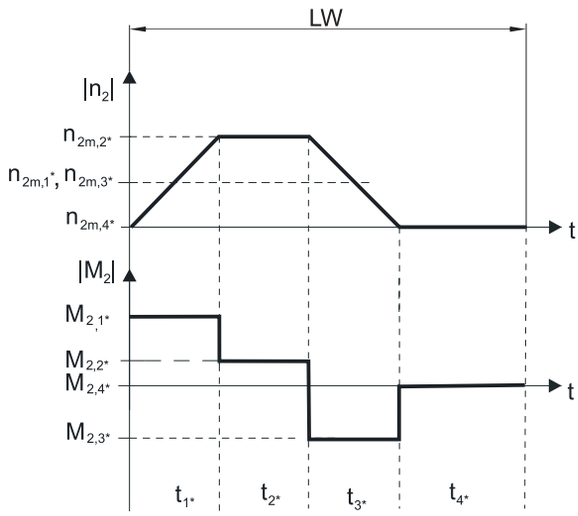

Calculation of the actual maximum acceleration torque

$$M_{2acc*} = J_{tot} \cdot \frac{\Delta n_2}{9.55 \cdot \Delta t} + M_{L*}$$

Calculation of the actual average input speed

$$n_{1m*} = n_{2m*} \cdot i$$

$$n_{2m*} = \frac{|n_{2m,1*}| \cdot t_{1*} + \ldots + |n_{2m,n*}| \cdot t_{n*}}{t_{1*} + \ldots + t_{n*}}$$

If $t_{1*} + \ldots + t_{3*} \geq 6$ min, calculate n_{2m*} without the rest phase t_{4*}.

The values for the ratio i can be found in the selection tables.

Calculation of the actual emergency-off torque

$$M_{2NOT*} = J_{tot} \cdot \frac{\Delta n_2}{9.55 \cdot \Delta t} + M_{L*}$$

Calculation of the actual equivalent torque

$$M_{2eq*} = \sqrt[3]{\frac{|n_{2m,1*}| \cdot t_{1*} \cdot |M_{2,1*}{}^3| + \ldots + |n_{2m,n*}| \cdot t_{n*} \cdot |M_{2,n*}{}^3|}{|n_{2m,1*}| \cdot t_{1*} + \ldots + |n_{2m,n*}| \cdot t_{n*}}}$$

Operating factors

Operating mode	fB_{op}
Uniform continuous operation	1.00
Cyclic operation	1.00
Reversing load cyclic operation	1.00

Run time	fB_t
Daily runtime ≤ 8 h	1.00
Daily runtime ≤ 16 h	1.15
Daily runtime ≤ 24 h	1.20

Cyclic operation	fB_{ZB}
≤ 1000 load changes/hour (LW/h)	1.00
> 1000 load changes/hour (LW/h)	1.15

Temperature		fB_T
Motor cooling	**Surrounding temperature**	
Motor with forced ventilation	≤ 20 °C	0.9
	≤ 30 °C	1.0
	≤ 40 °C	1.15
Motor with convection cooling	≤ 20 °C	1.0
	≤ 30 °C	1.1
	≤ 40 °C	1.25

Notes

- The maximum permitted gear unit temperature of ≤ 80 °C must not be exceeded. Doing so may result in damage to the gear unit.

6.6.2 Permitted shaft loads for the output shaft

The values specified in the tables apply to the permitted shaft loads:

- For shaft dimensions in accordance with the catalog
- For output speeds n_{2m*} ≤ 100 rpm ($F^{2axN} = F_{2ax100}$; $F_{2radN} = F_{2rad100}$; $M_{2kN} = M_{2k100}$)
- Only if radial forces on the gear unit are stabilized by its pilots (housing, flange shaft)

Permitted shaft loads for standard bearing S

Type	z_2 [mm]	F_{2ax100} [N]	$F_{2rad100}$ [N]	$F_{2rad,acc}$ [N]	M_{2k100} [Nm]	$M_{2k,acc}$ [Nm]
PE2	8.0	400	800	800	13	13
PE3	11.0	800	1600	1600	40	40
PE4	13.0	1900	2400	2400	73	73
PE5	16.0	4000	4600	4600	206	206

For other output speeds, download diagrams at http://configurator.stoeber.de.

The following applies to output speeds n_{2m*} > 100 rpm:

$$F_{2axN} = \frac{F_{2ax100}}{\sqrt[3]{\frac{n_{2m*}}{100\ \text{rpm}}}} \qquad F_{2radN} = \frac{F_{2rad100}}{\sqrt[3]{\frac{n_{2m*}}{100\ \text{rpm}}}} \qquad M_{2kN} = \frac{M_{2k100}}{\sqrt[3]{\frac{n_{2m*}}{100\ \text{rpm}}}}$$

The values for F_{2ax100}, $F_{2rad100}$ and M_{2k100} can be found in the table "Permitted shaft loads" in this chapter.

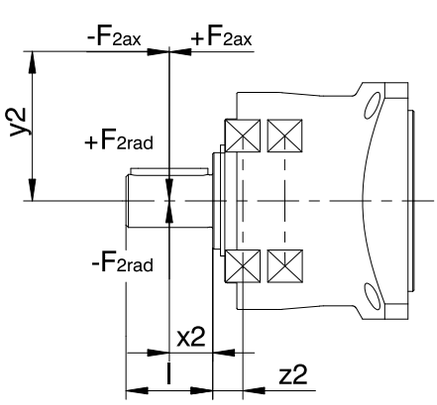

Fig. 2: Force application points

The specified values for $F_{2rad100}$ and $F_{2rad,acc}$ refer to an application of force at the center of the output shaft: x_2 = l/2.

Shaft dimensions can be found in the "Dimensional drawings" chapter.

The following applies to other force application points:

$$M_{2k,acc*} = \frac{2 \cdot F_{2ax*} \cdot y_2 + F_{2rad,acc*} \cdot (x_2 + z_2)}{1000} \leq M_{2k,acc}$$

$$F_{2rad,acc*} \leq F_{2rad,acc}$$

$$F_{2ax*} \leq F_{2axN}$$

The values for $F_{2rad,acc}$ and $M_{2k,acc}$ can be found in the table "Permitted shaft loads" in this chapter.

For applications with multiple axial and/or radial forces, you must add the forces as vectors.

In the event of EMERGENCY OFF operation (max. 1000 load changes), you can multiply the permitted forces and torques for F_{2ax100}, $F_{2rad100}$ and M_{2k100} by a factor of two.

Also note the calculation for equivalent values:

$$M_{2k,eq*} = \sqrt[3]{\frac{|n_{2m,1*}| \cdot t_{1*} \cdot |M_{2k,acc,1*}{}^{3}| + \ldots + |n_{2m,n*}| \cdot t_{n*} \cdot |M_{2k,acc,n*}{}^{3}|}{|n_{2m,1*}| \cdot t_{1*} + \ldots + |n_{2m,n*}| \cdot t_{n*}}} \leq M_{2kN}$$

$$F_{2rad,eq*} = \sqrt[3]{\frac{|n_{2m,1*}| \cdot t_{1*} \cdot |F_{2rad,acc,1*}{}^{3}| + \ldots + |n_{2m,n*}| \cdot t_{n*} \cdot |F_{2rad,acc,n*}{}^{3}|}{|n_{2m,1*}| \cdot t_{1*} + \ldots + |n_{2m,n*}| \cdot t_{n*}}} \leq F_{2radN}$$

The following apply to the bearing service life L_{10h} ($ED_{10} \leq 40\%$):

$L_{10h} > 10000$ h with $1 < M_{2kN}/M_{2k*} < 1.25$

$L_{10h} > 20000$ h with $1.25 < M_{2kN}/M_{2k*} < 1.5$

$L_{10h} > 30000$ h with $1.5 < M_{2kN}/M_{2k*}$

For different duty cycles:

$$L_{10h} > L_{10h(ED_{10}=40\%)} \cdot \frac{40\%}{ED_{10}}$$

6.6.3 Permitted breakdown torques at the gear unit input

For a horizontal mounting position of the motor, verify that the permitted breakdown torque at the gear unit input is not exceeded before installation on a STOBER gear unit. You can find information for how to do that in this chapter.

Calculate the actual breakdown torque as follows:

$M_{1k*} = F_{1k*} \bullet l_{sp} \leq M_{1k}$

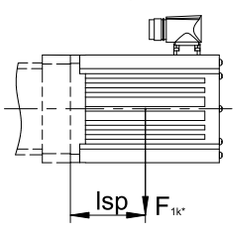

Type	M_{1k} [Nm]
PE221_ME	10
PE222_ME	10
PE321_ME	20
PE322_ME	10
PE421_ME	40
PE422_ME	20
PE521_ME	80
PE522_ME	40

The values also apply to the MEL motor adapter.

6.6.4 Tightness

Despite taking great care, a lubricant leak cannot be fully ruled out over the mission time of a gear unit. If you use a gear unit with goods incompatible with the lubricant, you must take measures to prevent direct contact with the gear unit lubricant in case of a leak.

6.7 Additional documentation

Additional documentation related to the product can be found at
http://www.stoeber.de/en/downloads/

Enter the ID of the documentation in the Search... field.

Documentation	ID
Operating manual for PE22 – PE52 planetary gear units and planetary geared motors	443252_en
Operating manual for explosion-proof P/PA/PE/PH/PHA/PHQ/PHQA/PHV/PHVA planetary gear units	443030_en
Information explosion-proof gear units	441677_en

7 C helical gear units

Table of contents

7.1 Overview ... 106

7.2 Selection tables ... 107

7.3 Dimensional drawings ... 119

7.3.1 Solid shaft design with feather key, N housing design (foot) ... 120

7.3.2 Solid shaft design with feather key, G housing design (pitch circle diameter) ... 122

7.3.3 Solid shaft design with feather key, F housing design (round flange) ... 124

7.3.4 Solid shaft design with feather key, Q housing design (square flange) ... 126

7.3.5 Oil expansion tank ... 127

7.4 Type designation ... 128

7.4.1 Nameplate ... 129

7.5 Product description ... 129

7.5.1 Input options ... 129

7.5.2 Motor adapter with EasyAdapt coupling (ME) ... 130

7.5.3 Square motor adapter with backlash-free plug-in coupling (MQ) ... 130

7.5.4 Housing design ... 131

7.5.5 Shaft design ... 131

7.5.6 Installation conditions ... 131

7.5.7 Mounting positions ... 132

7.5.8 Lubricants ... 132

7.5.9 Position of locking screw access ... 132

7.5.10 Other product features ... 133

7.5.11 Maintenance ... 133

7.5.12 Direction of rotation ... 133

7.6 Project configuration ... 133

7.6.1 Drive selection ... 134

7.6.2 Permitted shaft loads for the output shaft ... 136

7.6.3 Permitted breakdown torques at the gear unit input ... 137

7.6.4 Radial shaft seal rings ... 137

7.6.5 Oil expansion tank ... 137

7.7 Additional documentation ... 138

7 Helical gear units

C

7.1 Overview

Compact helical gear units

Features

Power density	★☆☆☆☆
Backlash	★★☆☆☆
Price category	€
Shaft load	★★☆☆☆
Smooth operation	★★★☆☆
Torsional stiffness	★★☆☆☆
Mass moment of inertia	★★★★☆
Helical gearing	✓
Maintenance-free (C0 – C5)	✓
FKM seal ring at the input	✓
Reinforced output bearing	✓ (on request)
Easy and reliable attachment to any synchronous servo motor	✓

Key ★☆☆☆☆ good | ★★★★★ excellent
€ Economy | €€€€€ Premium

Technical data

i	2 – 276
M_{2acc}	25 – 8000 Nm
$\Delta\phi_2$	10 – 20 arcmin
η_{get}	96 – 97 %

7.2 Selection tables

The technical data specified in the selection tables applies to:

- Installation altitudes up to 1000 m above sea level
- Surrounding temperatures from 0 °C to 40 °C
- Without consideration for thermal limiting performance

You can find the mass moment of inertia J_1 for smaller motor shaft diameters and all other technical data at http://configurator.stoeber.de.

An explanation of the formula symbols can be found in the chapter [▸ 18.1].

i	i_{exakt}	Type	n_{1MAXDB} EL1,2,3,4 [rpm]	n_{1MAXDB} EL5,6 [rpm]	n_{1MAXZB} [rpm]	J_1 [kgcm²]	m [kg]	d_{MW} [mm]	$\Delta\varphi_2$ [arcmin]	C_2 [Nm/arcmin]	M_{2N} [Nm]	M_{2acc} [Nm]	M_{2NOT} [Nm]
C002 ($M_{2acc,max}$ = 72 Nm)													
1.997	1480/741	C002_0020 ME10	3500	3000	6000	1.4	7.4	≤19	20.0	1.2	35	47	58
1.997	1480/741	C002_0020 ME20	3500	3000	6000	3.3	8.4	≤24	20.0	1.2	35	47	58
2.769	36/13	C002_0028 ME10	3500	3000	6000	1.1	7.4	≤19	20.0	1.2	39	58	81
2.769	36/13	C002_0028 ME20	3500	3000	6000	3.0	8.4	≤24	20.0	1.2	39	58	81
3.067	46/15	C002_0031 ME10	3700	3600	6000	1.0	7.4	≤19	20.0	1.2	40	60	89
3.067	46/15	C002_0031 ME20	3700	3600	6000	2.9	8.4	≤24	20.0	1.2	40	60	89
3.318	1702/513	C002_0033 ME10	3700	3600	6000	0.99	7.4	≤19	20.0	1.2	41	62	97
3.318	1702/513	C002_0033 ME20	3700	3600	6000	2.9	8.4	≤24	20.0	1.2	41	62	97
3.835	441/115	C002_0038 ME10	3700	3600	6000	0.90	7.4	≤19	20.0	1.2	43	65	110
3.835	441/115	C002_0038 ME20	3700	3600	6000	2.8	8.4	≤24	20.0	1.2	43	65	110
4.149	1813/437	C002_0041 ME10	3700	3600	6000	0.89	7.4	≤19	20.0	1.2	44	65	110
4.149	1813/437	C002_0041 ME20	3700	3600	6000	2.8	8.4	≤24	20.0	1.2	44	65	110
4.680	117/25	C002_0047 ME10	4000	4000	6500	0.83	7.4	≤19	20.0	1.2	46	65	110
4.680	117/25	C002_0047 ME20	3700	3700	6000	2.7	8.4	≤24	20.0	1.2	46	65	110
5.063	481/95	C002_0051 ME10	4000	4000	6500	0.82	7.4	≤19	20.0	1.2	47	65	110
5.063	481/95	C002_0051 ME20	3700	3700	6000	2.7	8.4	≤24	20.0	1.2	47	65	110
5.824	99/17	C002_0058 ME10	4000	4000	6500	0.77	7.4	≤19	20.0	1.2	49	65	110
5.824	99/17	C002_0058 ME20	3700	3700	6000	2.7	8.4	≤24	20.0	1.2	49	65	110
6.300	2035/323	C002_0063 ME10	4000	4000	6500	0.77	7.4	≤19	20.0	1.2	51	65	110
6.300	2035/323	C002_0063 ME20	3700	3700	6000	2.7	8.4	≤24	20.0	1.2	51	65	110
7.714	54/7	C002_0077 ME10	4000	4000	7000	0.72	7.4	≤19	20.0	1.2	54	65	110
7.714	54/7	C002_0077 ME20	3700	3700	6000	2.6	8.4	≤24	20.0	1.2	54	65	110
8.235	667/81	C002_0082 ME10	3700	3600	6000	0.91	7.4	≤19	16.0	1.6	60	72	120
8.235	667/81	C002_0082 ME20	3700	3600	6000	2.8	8.4	≤24	16.0	1.6	60	72	120
9.228	1495/162	C002_0092 ME10	3700	3600	6000	0.90	7.4	≤19	16.0	1.6	60	65	120
9.228	1495/162	C002_0092 ME20	3700	3600	6000	2.8	8.4	≤24	16.0	1.6	60	65	120
10.30	1421/138	C002_0105 ME10	3700	3600	6000	0.84	7.4	≤19	16.0	1.6	60	72	120
10.30	1421/138	C002_0105 ME20	3700	3600	6000	2.7	8.4	≤24	16.0	1.6	60	72	120
11.54	3185/276	C002_0115 ME10	3700	3600	6000	0.83	7.4	≤19	16.0	1.6	60	65	120
11.54	3185/276	C002_0115 ME20	3700	3600	6000	2.7	8.4	≤24	16.0	1.6	60	65	120
12.57	377/30	C002_0125 ME10	4000	4000	6500	0.79	7.4	≤19	16.0	1.6	60	72	120
12.57	377/30	C002_0125 ME20	3700	3700	6000	2.7	8.4	≤24	16.0	1.6	60	72	120
14.08	169/12	C002_0140 ME10	4000	4000	6500	0.79	7.4	≤19	16.0	1.6	60	65	120
14.08	169/12	C002_0140 ME20	3700	3700	6000	2.7	8.4	≤24	16.0	1.6	60	65	120
15.64	1595/102	C002_0155 ME10	4000	4000	6500	0.75	7.4	≤19	16.0	1.6	60	72	120
15.64	1595/102	C002_0155 ME20	3700	3700	6000	2.6	8.4	≤24	16.0	1.6	60	72	120
17.53	3575/204	C002_0175 ME10	4000	4000	6500	0.75	7.4	≤19	16.0	1.6	60	65	120
17.53	3575/204	C002_0175 ME20	3700	3700	6000	2.6	8.4	≤24	16.0	1.6	60	65	120
20.71	145/7	C002_0210 ME10	4000	4000	7000	0.71	7.4	≤19	16.0	1.6	60	72	120
20.71	145/7	C002_0210 ME20	3700	3700	6000	2.6	8.4	≤24	16.0	1.6	60	72	120
23.21	325/14	C002_0230 ME10	4000	4000	7000	0.71	7.4	≤19	16.0	1.6	60	65	120
23.21	325/14	C002_0230 ME20	3700	3700	6000	2.6	8.4	≤24	16.0	1.6	60	65	120
24.97	899/36	C002_0250 ME10	4000	4000	7000	0.69	7.4	≤19	16.0	1.6	60	72	120
24.97	899/36	C002_0250 ME20	3700	3700	6000	2.6	8.4	≤24	16.0	1.6	60	72	120
27.99	2015/72	C002_0280 ME10	4000	4000	7000	0.69	7.4	≤19	16.0	1.6	60	65	120
27.99	2015/72	C002_0280 ME20	3700	3700	6000	2.6	8.4	≤24	16.0	1.6	60	65	120
31.26	2813/90	C002_0310 ME10	4000	4000	7000	0.67	7.4	≤19	16.0	1.6	60	72	120
31.26	2813/90	C002_0310 ME20	3700	3700	6000	2.6	8.4	≤24	16.0	1.6	60	72	120
35.03	1261/36	C002_0350 ME10	4000	4000	7000	0.67	7.4	≤19	16.0	1.6	60	65	120
35.03	1261/36	C002_0350 ME20	3700	3700	6000	2.6	8.4	≤24	16.0	1.6	60	65	120
41.77	3509/84	C002_0420 ME10	4000	4000	7000	0.63	7.4	≤19	16.0	1.6	60	72	120
46.82	7865/168	C002_0470 ME10	4000	4000	7000	0.63	7.4	≤19	16.0	1.6	60	65	120

i	i_{exakt}	Type	n_{1MAXDB} EL1,2,3,4 [rpm]	n_{1MAXDB} EL5,6 [rpm]	n_{1MAXZB} [rpm]	J_1 [kgcm²]	m [kg]	d_{MW} [mm]	$\Delta\varphi_2$ [arcmin]	C_2 [Nm/arcmin]	M_{2N} [Nm]	M_{2acc} [Nm]	M_{2NOT} [Nm]
C002 ($M_{2acc,max}$ = 72 Nm)													
49.94	899/18	C002_0500 ME10	4000	4000	7000	0.62	7.4	≤19	16.0	1.6	60	72	120
55.97	2015/36	C002_0560 ME10	4000	4000	7000	0.62	7.4	≤19	16.0	1.6	60	65	120
62.35	1247/20	C002_0620 ME10	4000	4000	7000	0.62	7.4	≤19	16.0	1.6	60	72	120
69.88	559/8	C002_0700 ME10	4000	4000	7000	0.61	7.4	≤19	16.0	1.6	60	65	120
C102 ($M_{2acc,max}$ = 138 Nm)													
2.018	1128/559	C102_0020 ME10	3100	2600	5000	2.5	12	≤19	18.0	2.8	47	47	59
2.018	1128/559	C102_0020 ME20	3100	2600	5000	5.9	13	≤32	18.0	3.0	70	104	147
2.018	1128/559	C102_0020 ME30	3100	2600	5000	11	15	≤38	18.0	3.1	70	104	147
2.177	468/215	C102_0022 ME10	3100	2600	5000	2.5	12	≤19	18.0	2.8	51	51	63
2.177	468/215	C102_0022 ME20	3100	2600	5000	5.9	13	≤32	18.0	3.1	71	107	158
2.177	468/215	C102_0022 ME30	3100	2600	5000	11	15	≤38	18.0	3.1	71	107	158
2.394	2303/962	C102_0024 ME20	3100	2600	5000	5.5	13	≤32	18.0	3.1	74	110	174
2.394	2303/962	C102_0024 ME30	3100	2600	5000	11	15	≤38	18.0	3.1	74	110	174
2.582	1911/740	C102_0026 ME20	3100	2600	5000	5.5	13	≤32	18.0	3.1	75	113	188
2.582	1911/740	C102_0026 ME30	3100	2600	5000	11	15	≤38	18.0	3.1	75	113	188
3.091	2491/806	C102_0031 ME10	3600	3100	6000	1.6	12	≤19	18.0	3.0	63	72	90
3.091	2491/806	C102_0031 ME20	3600	3100	6000	5.0	13	≤32	18.0	3.1	80	120	220
3.091	2491/806	C102_0031 ME30	3500	3100	5000	10	15	≤38	18.0	3.1	80	120	220
3.334	2067/620	C102_0033 ME10	3600	3100	6000	1.6	12	≤19	18.0	3.0	68	78	97
3.334	2067/620	C102_0033 ME20	3600	3100	6000	5.0	13	≤32	18.0	3.1	82	123	220
3.334	2067/620	C102_0033 ME30	3500	3100	5000	10	15	≤38	18.0	3.1	82	123	220
3.883	1363/351	C102_0039 ME10	3600	3100	6000	1.3	12	≤19	18.0	3.0	69	90	113
3.883	1363/351	C102_0039 ME20	3600	3100	6000	4.8	13	≤32	18.0	3.1	86	130	220
3.883	1363/351	C102_0039 ME30	3500	3100	5000	10	15	≤38	18.0	3.1	86	130	220
4.189	377/90	C102_0042 ME10	3600	3100	6000	1.3	12	≤19	18.0	3.0	74	98	122
4.189	377/90	C102_0042 ME20	3600	3100	6000	4.7	13	≤32	18.0	3.1	89	130	220
4.189	377/90	C102_0042 ME30	3500	3100	5000	10	15	≤38	18.0	3.1	89	130	220
4.658	3149/676	C102_0047 ME10	3800	3500	6000	1.2	12	≤19	18.0	3.1	72	108	136
4.658	3149/676	C102_0047 ME20	3700	3500	6000	4.6	13	≤32	18.0	3.1	92	130	220
4.658	3149/676	C102_0047 ME30	3500	3500	5000	9.9	15	≤38	18.0	3.1	92	130	220
5.025	201/40	C102_0050 ME10	3800	3500	6000	1.2	12	≤19	18.0	3.1	77	117	146
5.025	201/40	C102_0050 ME20	3700	3500	6000	4.6	13	≤32	18.0	3.1	94	130	220
5.025	201/40	C102_0050 ME30	3500	3500	5000	9.9	15	≤38	18.0	3.1	94	130	220
5.875	47/8	C102_0059 ME10	3800	3500	6000	1.0	12	≤19	18.0	3.1	78	130	171
5.875	47/8	C102_0059 ME20	3700	3500	6000	4.4	13	≤32	18.0	3.1	99	130	220
5.875	47/8	C102_0059 ME30	3500	3500	5000	9.7	15	≤38	18.0	3.1	99	130	220
6.338	507/80	C102_0063 ME10	3800	3500	6000	1.0	12	≤19	18.0	3.1	84	130	184
6.338	507/80	C102_0063 ME20	3700	3500	6000	4.4	13	≤32	18.0	3.1	102	130	220
6.338	507/80	C102_0063 ME30	3500	3500	5000	9.7	15	≤38	18.0	3.1	102	130	220
7.796	3243/416	C102_0078 ME10	4000	3900	6500	0.88	12	≤19	18.0	3.1	83	130	209
7.796	3243/416	C102_0078 ME20	3700	3700	6000	4.3	13	≤32	18.0	3.1	109	130	220
7.796	3243/416	C102_0078 ME30	3500	3500	5000	9.6	15	≤38	18.0	3.1	109	130	220
8.263	1537/186	C102_0083 ME10	3600	3100	6000	1.4	12	≤19	15.0	3.9	120	138	240
8.263	1537/186	C102_0083 ME20	3600	3100	6000	4.8	13	≤32	15.0	3.9	120	138	240
8.263	1537/186	C102_0083 ME30	3500	3100	5000	10	15	≤38	15.0	3.9	120	138	240
9.326	3180/341	C102_0093 ME10	3600	3100	6000	1.3	12	≤19	15.0	3.9	120	138	240
9.326	3180/341	C102_0093 ME20	3600	3100	6000	4.7	13	≤32	15.0	3.9	120	138	240
9.326	3180/341	C102_0093 ME30	3500	3100	5000	10	15	≤38	15.0	3.9	120	138	240
10.38	841/81	C102_0105 ME10	3600	3100	6000	1.2	12	≤19	15.0	3.9	120	138	240
10.38	841/81	C102_0105 ME20	3600	3100	6000	4.6	13	≤32	15.0	3.9	120	138	240
10.38	841/81	C102_0105 ME30	3500	3100	5000	9.9	15	≤38	15.0	3.9	120	138	240
11.72	1160/99	C102_0115 ME10	3600	3100	6000	1.2	12	≤19	15.0	3.9	120	138	240
11.72	1160/99	C102_0115 ME20	3600	3100	6000	4.6	13	≤32	15.0	3.9	120	138	240
11.72	1160/99	C102_0115 ME30	3500	3100	5000	9.9	15	≤38	15.0	3.9	120	138	240
12.46	1943/156	C102_0125 ME10	3800	3500	6000	1.0	12	≤19	15.0	3.9	120	138	240
12.46	1943/156	C102_0125 ME20	3700	3500	6000	4.5	13	≤32	15.0	3.9	120	138	240
12.46	1943/156	C102_0125 ME30	3500	3500	5000	9.8	15	≤38	15.0	3.9	120	138	240
14.06	2010/143	C102_0140 ME10	3800	3500	6000	1.0	12	≤19	15.0	3.9	120	138	240
14.06	2010/143	C102_0140 ME20	3700	3500	6000	4.4	13	≤32	15.0	3.9	120	138	240
14.06	2010/143	C102_0140 ME30	3500	3500	5000	9.8	15	≤38	15.0	3.9	120	138	240
15.71	377/24	C102_0155 ME10	3800	3500	6000	0.94	12	≤19	15.0	3.9	120	138	240
15.71	377/24	C102_0155 ME20	3700	3500	6000	4.3	13	≤32	15.0	3.9	120	138	240
15.71	377/24	C102_0155 ME30	3500	3500	5000	9.7	15	≤38	15.0	3.9	120	138	240
17.73	195/11	C102_0175 ME10	3800	3500	6000	0.93	12	≤19	15.0	3.9	120	138	240

i	i_{exakt}	Type	n_{1MAXDB} EL1,2,3,4 [rpm]	n_{1MAXDB} EL5,6 [rpm]	n_{1MAXZB} [rpm]	J_1 [kgcm²]	m [kg]	d_{MW} [mm]	$\Delta\varphi_2$ [arcmin]	C_2 [Nm/arcmin]	M_{2N} [Nm]	M_{2acc} [Nm]	M_{2NOT} [Nm]
C102 ($M_{2acc,max}$ = 138 Nm)													
17.73	195/11	C102_0175 ME20	3700	3500	6000	4.3	13	≤32	15.0	3.9	120	138	240
17.73	195/11	C102_0175 ME30	3500	3500	5000	9.7	15	≤38	15.0	3.9	120	138	240
20.84	667/32	C102_0210 ME10	4000	3900	6500	0.84	12	≤19	15.0	3.9	120	138	240
20.84	667/32	C102_0210 ME20	3700	3700	6000	4.2	13	≤32	15.0	3.9	120	138	240
20.84	667/32	C102_0210 ME30	3500	3500	5000	9.6	15	≤38	15.0	3.9	120	138	240
23.52	1035/44	C102_0240 ME10	4000	3900	6500	0.83	12	≤19	15.0	3.9	120	138	240
23.52	1035/44	C102_0240 ME20	3700	3700	6000	4.2	13	≤32	15.0	3.9	120	138	240
23.52	1035/44	C102_0240 ME30	3500	3500	5000	9.6	15	≤38	15.0	3.9	120	138	240
25.13	377/15	C102_0250 ME10	4000	3900	6500	0.78	12	≤19	15.0	3.9	120	138	240
25.13	377/15	C102_0250 ME20	3700	3700	6000	2.7	13	≤24	15.0	3.9	120	138	240
28.36	312/11	C102_0280 ME10	4000	3900	6500	0.78	12	≤19	15.0	3.9	120	138	240
28.36	312/11	C102_0280 ME20	3700	3700	6000	2.7	13	≤24	15.0	3.9	120	138	240
31.07	435/14	C102_0310 ME10	4000	3900	6500	0.74	12	≤19	15.0	3.9	120	138	240
31.07	435/14	C102_0310 ME20	3700	3700	6000	2.6	13	≤24	15.0	3.9	120	138	240
35.07	2700/77	C102_0350 ME10	4000	3900	6500	0.74	12	≤19	15.0	3.9	120	138	240
35.07	2700/77	C102_0350 ME20	3700	3700	6000	2.6	13	≤24	15.0	3.9	120	138	240
41.57	1247/30	C102_0420 ME10	4000	3900	6500	0.70	12	≤19	15.0	3.9	120	138	240
41.57	1247/30	C102_0420 ME20	3700	3700	6000	2.6	13	≤24	15.0	3.9	120	138	240
46.91	516/11	C102_0470 ME10	4000	3900	6500	0.70	12	≤19	15.0	3.9	120	138	240
46.91	516/11	C102_0470 ME20	3700	3700	6000	2.6	13	≤24	15.0	3.9	120	138	240
49.94	899/18	C102_0500 ME10	4000	3900	6500	0.65	12	≤19	15.0	3.9	120	138	240
56.36	620/11	C102_0560 ME10	4000	3900	6500	0.65	12	≤19	15.0	3.9	120	138	240
62.43	4495/72	C102_0620 ME10	4000	3900	6500	0.64	12	≤19	15.0	3.9	119	138	229
70.46	775/11	C102_0700 ME10	4000	3900	6500	0.63	12	≤19	15.0	3.9	120	138	240
C103 ($M_{2acc,max}$ = 138 Nm)													
81.64	31349/384	C103_0820 ME10	4000	3900	6500	0.66	15	≤19	15.0	3.9	120	138	240
92.13	16215/176	C103_0920 ME10	4000	3900	6500	0.66	15	≤19	15.0	3.9	120	138	240
111.1	1222/11	C103_1110 ME10	4000	3900	6500	0.66	15	≤19	15.0	3.9	120	138	240
137.3	10575/77	C103_1370 ME10	4000	3900	6500	0.65	15	≤19	15.0	3.9	120	138	240
183.7	2021/11	C103_1840 ME10	4000	3900	6500	0.65	15	≤19	15.0	3.9	120	138	240
220.8	7285/33	C103_2210 ME10	4000	3900	6500	0.65	15	≤19	15.0	3.9	120	138	240
275.9	36425/132	C103_2760 ME10	4000	3900	6500	0.65	15	≤19	15.0	3.9	120	138	240
C202 ($M_{2acc,max}$ = 230 Nm)													
2.009	432/215	C202_0020 ME20	3000	2600	4500	7.9	17	≤32	17.0	5.7	106	117	146
2.009	432/215	C202_0020 ME30	3000	2600	4500	13	19	≤38	17.0	5.9	106	159	350
2.184	2160/989	C202_0022 ME20	3000	2600	4500	7.8	17	≤32	17.0	5.7	109	127	159
2.184	2160/989	C202_0022 ME30	3000	2600	4500	13	19	≤38	17.0	5.9	109	163	350
2.475	99/40	C202_0025 ME20	3000	2600	4500	6.9	17	≤32	17.0	5.8	114	144	180
2.475	99/40	C202_0025 ME30	3000	2600	4500	12	19	≤38	17.0	5.9	114	144	180
2.690	495/184	C202_0027 ME20	3000	2600	4500	6.8	17	≤32	17.0	5.8	117	157	196
2.690	495/184	C202_0027 ME30	3000	2600	4500	12	19	≤38	17.0	5.9	117	157	196
3.103	90/29	C202_0031 ME20	3500	3100	5000	6.1	17	≤32	17.0	5.9	123	181	226
3.103	90/29	C202_0031 ME30	3500	3100	5000	11	19	≤38	17.0	5.9	123	181	226
3.373	2250/667	C202_0034 ME20	3500	3100	5000	6.0	17	≤32	17.0	5.9	126	189	246
3.373	2250/667	C202_0034 ME30	3500	3100	5000	11	19	≤38	17.0	5.9	126	189	246
3.888	486/125	C202_0039 ME10	3500	3100	5000	2.1	16	≤19	17.0	5.6	78	91	113
3.888	486/125	C202_0039 ME20	3500	3100	5000	5.5	17	≤32	17.0	5.9	132	198	283
3.888	486/125	C202_0039 ME30	3500	3100	5000	11	19	≤38	17.0	6.0	132	198	283
4.226	486/115	C202_0042 ME10	3500	3100	5000	2.1	16	≤19	17.0	5.7	85	98	123
4.226	486/115	C202_0042 ME20	3500	3100	5000	5.5	17	≤32	17.0	5.9	136	200	308
4.226	486/115	C202_0042 ME30	3500	3100	5000	11	19	≤38	17.0	6.0	136	200	308
4.667	14/3	C202_0047 ME10	3700	3500	5500	1.7	16	≤19	17.0	5.8	81	109	136
4.667	14/3	C202_0047 ME20	3700	3500	5500	5.1	17	≤32	17.0	6.0	140	200	339
4.667	14/3	C202_0047 ME30	3500	3500	5000	10	19	≤38	17.0	6.0	140	200	339
5.072	350/69	C202_0051 ME10	3700	3500	5500	1.7	16	≤19	17.0	5.8	88	118	148
5.072	350/69	C202_0051 ME20	3700	3500	5500	5.1	17	≤32	17.0	6.0	144	200	350
5.072	350/69	C202_0051 ME30	3500	3500	5000	10	19	≤38	17.0	6.0	144	200	350
5.791	666/115	C202_0058 ME10	3700	3500	5500	1.4	16	≤19	17.0	5.8	86	135	169
5.791	666/115	C202_0058 ME20	3700	3500	5500	4.8	17	≤32	17.0	6.0	151	200	350
5.791	666/115	C202_0058 ME30	3500	3500	5000	10	19	≤38	17.0	6.0	151	200	350
6.295	3330/529	C202_0063 ME10	3700	3500	5500	1.4	16	≤19	17.0	5.9	93	147	183
6.295	3330/529	C202_0063 ME20	3700	3500	5500	4.8	17	≤32	17.0	6.0	155	200	350
6.295	3330/529	C202_0063 ME30	3500	3500	5000	10	19	≤38	17.0	6.0	155	200	350
7.800	39/5	C202_0078 ME10	4000	3900	6500	1.1	16	≤19	17.0	5.9	91	173	216

i	i_{exakt}	Type	n_{1MAXDB} EL1,2,3,4 [rpm]	n_{1MAXDB} EL5,6 [rpm]	n_{1MAXZB} [rpm]	J_1 [kgcm²]	m [kg]	d_{MW} [mm]	$\Delta\varphi_2$ [arcmin]	C_2 [Nm/arcmin]	M_{2N} [Nm]	M_{2acc} [Nm]	M_{2NOT} [Nm]
C202 ($M_{2acc,max}$ = 230 Nm)													
7.800	39/5	C202_0078 ME20	3700	3700	6000	4.5	17	≤32	17.0	6.0	167	200	350
7.800	39/5	C202_0078 ME30	3500	3500	5000	9.9	19	≤38	17.0	6.0	167	200	350
8.190	475/58	C202_0082 ME20	3500	3100	5000	5.6	17	≤32	14.0	8.3	200	230	400
8.190	475/58	C202_0082 ME30	3500	3100	5000	11	19	≤38	14.0	8.3	200	230	400
9.387	2450/261	C202_0094 ME20	3500	3100	5000	5.5	17	≤32	14.0	8.3	200	230	400
9.387	2450/261	C202_0094 ME30	3500	3100	5000	11	19	≤38	14.0	8.3	200	230	400
10.26	513/50	C202_0105 ME10	3500	3100	5000	1.8	16	≤19	14.0	8.2	200	230	299
10.26	513/50	C202_0105 ME20	3500	3100	5000	5.2	17	≤32	14.0	8.3	200	230	400
10.26	513/50	C202_0105 ME30	3500	3100	5000	10	19	≤38	14.0	8.3	200	230	400
11.76	294/25	C202_0120 ME10	3500	3100	5000	1.7	16	≤19	14.0	8.2	200	230	342
11.76	294/25	C202_0120 ME20	3500	3100	5000	5.2	17	≤32	14.0	8.3	200	230	400
11.76	294/25	C202_0120 ME30	3500	3100	5000	10	19	≤38	14.0	8.3	200	230	400
12.32	665/54	C202_0125 ME10	3700	3500	5500	1.5	16	≤19	14.0	8.2	200	230	359
12.32	665/54	C202_0125 ME20	3700	3500	5500	4.9	17	≤32	14.0	8.3	200	230	400
12.32	665/54	C202_0125 ME30	3500	3500	5000	10	19	≤38	14.0	8.3	200	230	400
14.12	3430/243	C202_0140 ME10	3700	3500	5500	1.5	16	≤19	14.0	8.2	200	230	400
14.12	3430/243	C202_0140 ME20	3700	3500	5500	4.9	17	≤32	14.0	8.3	200	230	400
14.12	3430/243	C202_0140 ME30	3500	3500	5000	10	19	≤38	14.0	8.3	200	230	400
15.28	703/46	C202_0155 ME10	3700	3500	5500	1.3	16	≤19	14.0	8.2	200	230	400
15.28	703/46	C202_0155 ME20	3700	3500	5500	4.7	17	≤32	14.0	8.3	200	230	400
15.28	703/46	C202_0155 ME30	3500	3500	5000	10	19	≤38	14.0	8.3	200	230	400
17.52	3626/207	C202_0175 ME10	3700	3500	5500	1.3	16	≤19	14.0	8.3	200	230	400
17.52	3626/207	C202_0175 ME20	3700	3500	5500	4.7	17	≤32	14.0	8.3	200	230	400
17.52	3626/207	C202_0175 ME30	3500	3500	5000	10	19	≤38	14.0	8.3	200	230	400
20.58	247/12	C202_0210 ME10	4000	3900	6500	1.1	16	≤19	14.0	8.3	200	230	400
20.58	247/12	C202_0210 ME20	3700	3700	6000	4.5	17	≤32	14.0	8.3	200	230	400
20.58	247/12	C202_0210 ME30	3500	3500	5000	9.8	19	≤38	14.0	8.3	200	230	400
23.59	637/27	C202_0240 ME10	4000	3900	6500	1.0	16	≤19	14.0	8.3	200	230	400
23.59	637/27	C202_0240 ME20	3700	3700	6000	4.5	17	≤32	14.0	8.3	200	230	400
23.59	637/27	C202_0240 ME30	3500	3500	5000	9.8	19	≤38	14.0	8.3	200	230	400
24.64	1577/64	C202_0250 ME10	4000	3900	6500	0.95	16	≤19	14.0	8.3	200	230	400
24.64	1577/64	C202_0250 ME20	3700	3700	6000	4.4	17	≤32	14.0	8.3	200	230	400
24.64	1577/64	C202_0250 ME30	3500	3500	5000	9.7	19	≤38	14.0	8.3	200	230	400
28.24	4067/144	C202_0280 ME10	4000	3900	6500	0.95	16	≤19	14.0	8.3	200	230	400
28.24	4067/144	C202_0280 ME20	3700	3700	6000	4.4	17	≤32	14.0	8.3	200	230	400
28.24	4067/144	C202_0280 ME30	3500	3500	5000	9.7	19	≤38	14.0	8.3	200	230	400
30.69	399/13	C202_0310 ME10	4000	3900	6500	0.86	16	≤19	14.0	8.3	200	230	400
30.69	399/13	C202_0310 ME20	3700	3700	6000	2.8	17	≤24	14.0	8.3	200	230	400
35.18	1372/39	C202_0350 ME10	4000	3900	6500	0.86	16	≤19	14.0	8.3	200	230	400
35.18	1372/39	C202_0350 ME20	3700	3700	6000	2.8	17	≤24	14.0	8.3	200	230	400
40.85	817/20	C202_0410 ME10	4000	3900	6500	0.77	16	≤19	14.0	8.3	200	230	400
40.85	817/20	C202_0410 ME20	3700	3700	6000	2.7	17	≤24	14.0	8.3	200	230	400
46.82	2107/45	C202_0470 ME10	4000	3900	6500	0.77	16	≤19	14.0	8.3	200	230	400
46.82	2107/45	C202_0470 ME20	3700	3700	6000	2.7	17	≤24	14.0	8.3	200	230	400
49.23	1083/22	C202_0490 ME10	4000	3900	6500	0.74	16	≤19	14.0	8.3	200	230	400
49.23	1083/22	C202_0490 ME20	3700	3700	6000	2.6	17	≤24	14.0	8.3	200	230	400
56.42	1862/33	C202_0560 ME10	4000	3900	6500	0.73	16	≤19	14.0	8.3	200	230	400
56.42	1862/33	C202_0560 ME20	3700	3700	6000	2.6	17	≤24	14.0	8.3	200	230	400
61.35	2945/48	C202_0610 ME10	4000	3900	6500	0.67	16	≤19	14.0	8.3	187	210	262
70.32	7595/108	C202_0700 ME10	4000	3900	6500	0.67	16	≤19	14.0	8.3	200	230	300
C203 ($M_{2acc,max}$ = 230 Nm)													
79.59	7163/90	C203_0800 ME20	3700	3700	6000	2.7	22	≤24	14.0	8.3	200	230	400
80.62	11609/144	C203_0810 ME10	4000	3900	6500	0.67	21	≤19	14.0	8.3	200	230	400
91.23	36946/405	C203_0910 ME20	3700	3700	6000	2.7	22	≤24	14.0	8.3	200	230	400
92.40	29939/324	C203_0920 ME10	4000	3900	6500	0.67	21	≤19	14.0	8.3	200	230	400
109.2	117943/1080	C203_1090 ME20	3700	3700	6000	2.7	22	≤24	14.0	8.3	200	230	400
110.6	191149/1728	C203_1110 ME10	4000	3900	6500	0.67	21	≤19	14.0	8.3	200	230	400
136.0	79576/585	C203_1360 ME20	3700	3700	6000	2.7	22	≤24	14.0	8.3	200	230	400
137.8	16121/117	C203_1380 ME10	4000	3900	6500	0.66	21	≤19	14.0	8.3	200	230	400
181.0	122206/675	C203_1810 ME20	3700	3700	6000	2.7	22	≤24	14.0	8.3	200	230	400
183.4	99029/540	C203_1830 ME10	4000	3900	6500	0.66	21	≤19	14.0	8.3	200	230	400
221.0	43757/198	C203_2210 ME10	4000	3900	6500	0.65	21	≤19	14.0	8.3	200	230	400
275.4	356965/1296	C203_2750 ME10	4000	3900	6500	0.65	21	≤19	14.0	8.3	200	230	300

i	i_{exakt}	Type	n_{1MAXDB} EL1,2,3,4 [rpm]	n_{1MAXDB} EL5,6 [rpm]	n_{1MAXZB} [rpm]	J_1 [kgcm²]	m [kg]	d_{MW} [mm]	$\Delta\varphi_2$ [arcmin]	C_2 [Nm/arcmin]	M_{2N} [Nm]	M_{2acc} [Nm]	M_{2NOT} [Nm]
C302 ($M_{2acc,max}$ = 400 Nm)													
2.020	608/301	C302_0020 ME30	2700	2300	4000	16	24	≤38	16.0	6.9	174	261	392
2.020	608/301	C302_0020 ME40	2700	2300	4000	38	29	≤48	16.0	6.9	174	261	392
2.177	468/215	C302_0022 ME30	2700	2300	4000	16	24	≤38	16.0	6.9	178	267	422
2.177	468/215	C302_0022 ME40	2700	2300	4000	38	29	≤48	16.0	6.9	178	267	422
2.510	1634/651	C302_0025 ME30	2700	2300	4000	15	24	≤38	16.0	7.0	187	280	487
2.510	1634/651	C302_0025 ME40	2700	2300	4000	36	29	≤48	16.0	6.9	187	280	487
2.705	1677/620	C302_0027 ME30	2700	2300	4000	14	24	≤38	16.0	7.0	192	287	525
2.705	1677/620	C302_0027 ME40	2700	2300	4000	36	29	≤48	16.0	7.0	192	287	525
3.110	1045/336	C302_0031 ME20	3200	2800	4800	7.7	22	≤32	16.0	6.9	181	181	226
3.110	1045/336	C302_0031 ME30	3200	2800	4800	13	24	≤38	16.0	7.0	201	301	550
3.110	1045/336	C302_0031 ME40	3000	2800	4500	35	29	≤48	16.0	7.0	201	301	550
3.352	429/128	C302_0034 ME20	3200	2800	4800	7.5	22	≤32	16.0	6.9	195	195	244
3.352	429/128	C302_0034 ME30	3200	2800	4800	13	24	≤38	16.0	7.0	206	309	550
3.352	429/128	C302_0034 ME40	3000	2800	4500	35	29	≤48	16.0	7.0	206	309	550
3.878	190/49	C302_0039 ME20	3200	2800	4800	6.6	22	≤32	16.0	6.9	203	226	282
3.878	190/49	C302_0039 ME30	3200	2800	4800	12	24	≤38	16.0	7.0	216	324	550
3.878	190/49	C302_0039 ME40	3000	2800	4500	34	29	≤48	16.0	7.0	216	324	550
4.179	117/28	C302_0042 ME20	3200	2800	4800	6.6	22	≤32	16.0	7.0	218	243	304
4.179	117/28	C302_0042 ME30	3200	2800	4800	12	24	≤38	16.0	7.0	221	330	550
4.179	117/28	C302_0042 ME40	3000	2800	4500	34	29	≤48	16.0	7.0	221	330	550
4.675	589/126	C302_0047 ME20	3500	3100	5500	6.0	22	≤32	16.0	7.0	210	272	340
4.675	589/126	C302_0047 ME30	3500	3100	5000	11	24	≤38	16.0	7.0	230	330	550
4.675	589/126	C302_0047 ME40	3000	3000	4500	33	29	≤48	16.0	7.0	230	330	550
5.038	403/80	C302_0050 ME20	3500	3100	5500	6.0	22	≤32	16.0	7.0	227	293	367
5.038	403/80	C302_0050 ME30	3500	3100	5000	11	24	≤38	16.0	7.0	236	330	550
5.038	403/80	C302_0050 ME40	3000	3000	4500	33	29	≤48	16.0	7.0	236	330	550
5.859	2584/441	C302_0059 ME20	3500	3100	5500	5.4	22	≤32	16.0	7.0	231	322	403
5.859	2584/441	C302_0059 ME30	3500	3100	5000	11	24	≤38	16.0	7.0	248	330	550
5.859	2584/441	C302_0059 ME40	3000	3000	4500	33	29	≤48	16.0	7.0	248	330	550
6.314	221/35	C302_0063 ME20	3500	3100	5500	5.4	22	≤32	16.0	7.0	249	330	434
6.314	221/35	C302_0063 ME30	3500	3100	5000	11	24	≤38	16.0	7.1	254	330	550
6.314	221/35	C302_0063 ME40	3000	3000	4500	33	29	≤48	16.0	7.0	254	330	550
7.841	494/63	C302_0078 ME20	3700	3500	6000	4.9	22	≤32	16.0	7.0	243	330	469
7.841	494/63	C302_0078 ME30	3500	3500	5000	10	24	≤38	16.0	7.1	273	330	550
7.841	494/63	C302_0078 ME40	3000	3000	4500	32	29	≤48	16.0	7.1	273	330	550
8.250	33/4	C302_0083 ME20	3200	2800	4800	6.6	22	≤32	13.0	8.7	335	400	600
8.250	33/4	C302_0083 ME30	3200	2800	4800	12	24	≤38	13.0	8.7	335	400	700
8.250	33/4	C302_0083 ME40	3000	2800	4500	34	29	≤48	13.0	8.7	335	400	700
9.310	3575/384	C302_0093 ME20	3200	2800	4800	6.6	22	≤32	13.0	8.7	349	350	678
9.310	3575/384	C302_0093 ME30	3200	2800	4800	12	24	≤38	13.0	8.7	349	350	700
9.310	3575/384	C302_0093 ME40	3000	2800	4500	34	29	≤48	13.0	8.7	349	350	700
10.29	72/7	C302_0105 ME20	3200	2800	4800	6.0	22	≤32	13.0	8.7	350	400	700
10.29	72/7	C302_0105 ME30	3200	2800	4800	11	24	≤38	13.0	8.7	350	400	700
10.29	72/7	C302_0105 ME40	3000	2800	4500	33	29	≤48	13.0	8.7	350	400	700
11.61	325/28	C302_0115 ME20	3200	2800	4800	5.9	22	≤32	13.0	8.7	350	350	700
11.61	325/28	C302_0115 ME30	3200	2800	4800	11	24	≤38	13.0	8.7	350	350	700
11.61	325/28	C302_0115 ME40	3000	2800	4500	33	29	≤48	13.0	8.7	350	350	700
12.40	62/5	C302_0125 ME20	3500	3100	5500	5.6	22	≤32	13.0	8.7	350	400	700
12.40	62/5	C302_0125 ME30	3500	3100	5000	11	24	≤38	13.0	8.7	350	400	700
12.40	62/5	C302_0125 ME40	3000	3000	4500	33	29	≤48	13.0	8.7	350	400	700
13.99	2015/144	C302_0140 ME20	3500	3100	5500	5.5	22	≤32	13.0	8.7	350	350	700
13.99	2015/144	C302_0140 ME30	3500	3100	5000	11	24	≤38	13.0	8.7	350	350	700
13.99	2015/144	C302_0140 ME40	3000	3000	4500	33	29	≤48	13.0	8.7	350	350	700
15.54	544/35	C302_0155 ME20	3500	3100	5500	5.1	22	≤32	13.0	8.7	350	400	700
15.54	544/35	C302_0155 ME30	3500	3100	5000	11	24	≤38	13.0	8.7	350	400	700
15.54	544/35	C302_0155 ME40	3000	3000	4500	33	29	≤48	13.0	8.7	350	400	700
17.54	1105/63	C302_0175 ME20	3500	3100	5500	5.1	22	≤32	13.0	8.7	350	350	700
17.54	1105/63	C302_0175 ME30	3500	3100	5000	11	24	≤38	13.0	8.7	350	350	700
17.54	1105/63	C302_0175 ME40	3000	3000	4500	32	29	≤48	13.0	8.7	350	350	700
20.80	104/5	C302_0210 ME20	3700	3500	6000	4.7	22	≤32	13.0	8.7	350	400	700
20.80	104/5	C302_0210 ME30	3500	3500	5000	10	24	≤38	13.0	8.7	350	400	700
20.80	104/5	C302_0210 ME40	3000	3000	4500	32	29	≤48	13.0	8.7	350	400	700
23.47	845/36	C302_0230 ME20	3700	3500	6000	4.7	22	≤32	13.0	8.7	350	350	700
23.47	845/36	C302_0230 ME30	3500	3500	5000	10	24	≤38	13.0	8.7	350	350	700

i	i_{exakt}	Type	n_{1MAXDB} EL1,2,3,4 [rpm]	n_{1MAXDB} EL5,6 [rpm]	n_{1MAXZB} [rpm]	J_1 [kgcm²]	m [kg]	d_{MW} [mm]	$\Delta\varphi_2$ [arcmin]	C_2 [Nm/arcmin]	M_{2N} [Nm]	M_{2acc} [Nm]	M_{2NOT} [Nm]
C302 ($M_{2acc,max}$ = 400 Nm)													
23.47	845/36	C302_0230 ME40	3000	3000	4500	32	29	≤48	13.0	8.7	350	350	700
24.80	124/5	C302_0250 ME20	3700	3500	6000	4.6	22	≤32	13.0	8.7	350	400	700
24.80	124/5	C302_0250 ME30	3500	3500	5000	9.9	24	≤38	13.0	8.7	350	400	700
27.99	2015/72	C302_0280 ME20	3700	3500	6000	4.6	22	≤32	13.0	8.7	350	350	700
27.99	2015/72	C302_0280 ME30	3500	3500	5000	9.9	24	≤38	13.0	8.7	350	350	700
31.04	776/25	C302_0310 ME20	3700	3500	6000	4.4	22	≤32	13.0	8.7	350	400	700
31.04	776/25	C302_0310 ME30	3500	3500	5000	9.7	24	≤38	13.0	8.7	350	400	700
35.03	1261/36	C302_0350 ME20	3700	3500	6000	4.4	22	≤32	13.0	8.7	350	350	700
35.03	1261/36	C302_0350 ME30	3500	3500	5000	9.7	24	≤38	13.0	8.7	350	350	700
41.35	2688/65	C302_0410 ME20	3700	3500	6000	2.8	22	≤24	13.0	8.7	350	400	700
46.67	140/3	C302_0470 ME20	3700	3500	6000	2.8	22	≤24	13.0	8.7	350	350	700
49.75	2736/55	C302_0500 ME20	3700	3500	6000	2.7	22	≤24	13.0	8.7	350	400	700
56.14	1235/22	C302_0560 ME20	3700	3500	6000	2.7	22	≤24	13.0	8.7	350	350	700
61.92	1548/25	C302_0620 ME20	3700	3500	6000	2.6	22	≤24	13.0	8.7	331	397	662
69.88	559/8	C302_0700 ME20	3700	3500	6000	2.6	22	≤24	13.0	8.7	350	350	700
C303 ($M_{2acc,max}$ = 400 Nm)													
80.43	6032/75	C303_0800 ME20	3700	3500	6000	2.7	27	≤24	13.0	8.7	350	400	700
81.47	1222/15	C303_0810 ME10	3800	3500	6000	0.69	26	≤19	13.0	8.7	350	400	522
90.76	4901/54	C303_0910 ME20	3700	3500	6000	2.7	27	≤24	13.0	8.7	350	350	700
91.93	39715/432	C303_0920 ME10	3800	3500	6000	0.69	26	≤19	13.0	8.7	350	350	590
108.2	11687/108	C303_1080 ME20	3700	3500	6000	2.7	27	≤24	13.0	8.7	350	350	700
109.6	94705/864	C303_1100 ME10	3800	3500	6000	0.68	26	≤19	13.0	8.7	350	350	700
135.4	36569/270	C303_1350 ME20	3700	3500	6000	2.7	27	≤24	13.0	8.7	350	350	700
137.2	59267/432	C303_1370 ME10	3800	3500	6000	0.67	26	≤19	13.0	8.7	350	350	700
180.4	1624/9	C303_1800 ME20	3700	3500	6000	2.7	27	≤24	13.0	8.7	350	350	700
182.8	1645/9	C303_1830 ME10	3800	3500	6000	0.66	26	≤19	13.0	8.7	350	350	700
217.1	7163/33	C303_2170 ME20	3700	3500	6000	2.7	27	≤24	13.0	8.7	350	350	700
219.9	58045/264	C303_2200 ME10	3800	3500	6000	0.66	26	≤19	13.0	8.7	350	350	700
273.7	26273/96	C303_2740 ME10	3800	3500	6000	0.66	26	≤19	13.0	8.7	350	350	700
C402 ($M_{2acc,max}$ = 600 Nm)													
1.968	551/280	C402_0020 ME30	2500	2100	3500	27	35	≤38	15.0	16	251	306	382
1.968	551/280	C402_0020 ME40	2500	2100	3500	48	39	≤48	15.0	16	251	306	382
2.456	609/248	C402_0025 ME30	2500	2100	3500	22	35	≤38	15.0	16	270	381	477
2.456	609/248	C402_0025 ME40	2500	2100	3500	44	39	≤48	15.0	16	270	381	477
3.099	1537/496	C402_0031 ME30	2900	2500	4500	18	35	≤38	15.0	17	292	437	599
3.099	1537/496	C402_0031 ME40	2900	2500	4500	40	39	≤48	15.0	17	292	437	599
3.894	841/216	C402_0039 ME20	2900	2500	4500	10	33	≤32	15.0	16	227	227	283
3.894	841/216	C402_0039 ME30	2900	2500	4500	16	35	≤38	15.0	17	315	472	713
3.894	841/216	C402_0039 ME40	2900	2500	4500	37	39	≤48	15.0	17	315	472	713
4.682	899/192	C402_0047 ME20	3300	2800	5000	8.6	33	≤32	15.0	17	244	273	341
4.682	899/192	C402_0047 ME30	3300	2800	5000	14	35	≤38	15.0	17	335	502	800
4.682	899/192	C402_0047 ME40	3000	2800	4500	36	39	≤48	15.0	17	335	502	800
5.891	377/64	C402_0059 ME20	3300	2800	5000	7.3	33	≤32	15.0	17	257	319	399
5.891	377/64	C402_0059 ME30	3300	2800	5000	13	35	≤38	15.0	17	361	542	850
5.891	377/64	C402_0059 ME40	3000	2800	4500	35	39	≤48	15.0	17	361	542	850
7.816	2001/256	C402_0078 ME20	3500	3200	5500	6.1	33	≤32	15.0	17	274	360	450
7.816	2001/256	C402_0078 ME30	3500	3200	5000	12	35	≤38	15.0	17	397	550	850
7.816	2001/256	C402_0078 ME40	3000	3000	4500	33	39	≤48	15.0	17	397	550	850
8.285	3339/403	C402_0083 ME30	2900	2500	4500	15	35	≤38	12.0	22	550	600	1100
8.285	3339/403	C402_0083 ME40	2900	2500	4500	37	39	≤48	12.0	22	550	600	1100
9.261	3445/372	C402_0093 ME30	2900	2500	4500	15	35	≤38	12.0	22	550	550	1100
9.261	3445/372	C402_0093 ME40	2900	2500	4500	37	39	≤48	12.0	22	550	550	1100
10.41	406/39	C402_0105 ME20	2900	2500	4500	8.4	33	≤32	12.0	22	550	600	757
10.41	406/39	C402_0105 ME30	2900	2500	4500	14	35	≤38	12.0	22	550	600	1100
10.41	406/39	C402_0105 ME40	2900	2500	4500	36	39	≤48	12.0	22	550	600	1100
11.64	1885/162	C402_0115 ME20	2900	2500	4500	8.3	33	≤32	12.0	22	550	550	847
11.64	1885/162	C402_0115 ME30	2900	2500	4500	14	35	≤38	12.0	22	550	550	1100
11.64	1885/162	C402_0115 ME40	2900	2500	4500	36	39	≤48	12.0	22	550	550	1100
12.52	651/52	C402_0125 ME20	3300	2800	5000	7.5	33	≤32	12.0	22	550	600	911
12.52	651/52	C402_0125 ME30	3300	2800	5000	13	35	≤38	12.0	22	550	600	1100
12.52	651/52	C402_0125 ME40	3000	2800	4500	35	39	≤48	12.0	22	550	600	1100
13.99	2015/144	C402_0140 ME20	3300	2800	5000	7.4	33	≤32	12.0	22	550	550	1018
13.99	2015/144	C402_0140 ME30	3300	2800	5000	13	35	≤38	12.0	22	550	550	1100
13.99	2015/144	C402_0140 ME40	3000	2800	4500	35	39	≤48	12.0	22	550	550	1100

i	i_{exakt}	Type	n_{1MAXDB} EL1,2,3,4 [rpm]	n_{1MAXDB} EL5,6 [rpm]	n_{1MAXZB} [rpm]	J_1 [kgcm²]	m [kg]	d_{MW} [mm]	$\Delta\varphi_2$ [arcmin]	C_2 [Nm/arcmin]	M_{2N} [Nm]	M_{2acc} [Nm]	M_{2NOT} [Nm]
C402 ($M_{2acc,max}$ = 600 Nm)													
15.75	63/4	C402_0160 ME20	3300	2800	5000	6.6	33	≤32	12.0	22	550	600	1065
15.75	63/4	C402_0160 ME30	3300	2800	5000	12	35	≤38	12.0	22	550	600	1100
15.75	63/4	C402_0160 ME40	3000	2800	4500	34	39	≤48	12.0	22	550	600	1100
17.60	845/48	C402_0175 ME20	3300	2800	5000	6.5	33	≤32	12.0	22	550	550	1100
17.60	845/48	C402_0175 ME30	3300	2800	5000	12	35	≤38	12.0	22	550	550	1100
17.60	845/48	C402_0175 ME40	3000	2800	4500	34	39	≤48	12.0	22	550	550	1100
20.90	4347/208	C402_0210 ME20	3500	3200	5500	5.7	33	≤32	12.0	22	550	600	1100
20.90	4347/208	C402_0210 ME30	3500	3200	5000	11	35	≤38	12.0	22	550	600	1100
20.90	4347/208	C402_0210 ME40	3000	3000	4500	33	39	≤48	12.0	22	550	600	1100
23.36	1495/64	C402_0230 ME20	3500	3200	5500	5.7	33	≤32	12.0	22	550	550	1100
23.36	1495/64	C402_0230 ME30	3500	3200	5000	11	35	≤38	12.0	22	550	550	1100
23.36	1495/64	C402_0230 ME40	3000	3000	4500	33	39	≤48	12.0	22	550	550	1100
24.92	324/13	C402_0250 ME20	3500	3200	5500	5.3	33	≤32	12.0	22	550	600	1100
24.92	324/13	C402_0250 ME30	3500	3200	5000	11	35	≤38	12.0	22	550	600	1100
27.86	195/7	C402_0280 ME20	3500	3200	5500	5.3	33	≤32	12.0	22	550	550	1100
27.86	195/7	C402_0280 ME30	3500	3200	5000	11	35	≤38	12.0	22	550	550	1100
31.15	405/13	C402_0310 ME20	3500	3200	5500	4.9	33	≤32	12.0	22	550	600	1100
31.15	405/13	C402_0310 ME30	3500	3200	5000	10	35	≤38	12.0	22	550	600	1100
34.82	975/28	C402_0350 ME20	3500	3200	5500	4.9	33	≤32	12.0	22	550	550	1100
34.82	975/28	C402_0350 ME30	3500	3200	5000	10	35	≤38	12.0	22	550	550	1100
41.75	7056/169	C402_0420 ME20	3500	3200	5500	4.6	33	≤32	12.0	22	550	600	1100
41.75	7056/169	C402_0420 ME30	3500	3200	5000	9.9	35	≤38	12.0	22	550	600	1100
46.67	140/3	C402_0470 ME20	3500	3200	5500	4.6	33	≤32	12.0	22	550	550	1100
46.67	140/3	C402_0470 ME30	3500	3200	5000	9.9	35	≤38	12.0	22	550	550	1100
50.19	1305/26	C402_0500 ME20	3500	3200	5500	2.9	33	≤24	12.0	22	550	600	928
56.10	9425/168	C402_0560 ME20	3500	3200	5500	2.9	33	≤24	12.0	22	550	550	1037
62.52	8127/130	C402_0630 ME20	3500	3200	5500	2.8	33	≤24	12.0	22	501	600	957
69.88	559/8	C402_0700 ME20	3500	3200	5500	2.8	33	≤24	12.0	22	550	550	1070
C403 ($M_{2acc,max}$ = 600 Nm)													
80.81	42021/520	C403_0810 ME20	3500	3200	5500	2.8	37	≤24	12.0	22	550	600	1100
90.32	8671/96	C403_0900 ME20	3500	3200	5500	2.8	37	≤24	12.0	22	550	550	1100
107.7	754/7	C403_1080 ME20	3500	3200	5500	2.8	37	≤24	12.0	22	550	550	1100
134.6	1885/14	C403_1350 ME20	3500	3200	5500	2.8	37	≤24	12.0	22	550	550	1100
180.4	1624/9	C403_1800 ME20	3500	3200	5500	2.7	37	≤24	12.0	22	550	550	1100
216.9	54665/252	C403_2170 ME20	3500	3200	5500	2.7	37	≤24	12.0	22	550	550	1037
270.2	16211/60	C403_2700 ME20	3500	3200	5500	2.7	37	≤24	12.0	22	550	550	1070
C502 ($M_{2acc,max}$ = 920 Nm)													
1.976	81/41	C502_0020 ME30	2400	2000	3200	40	46	≤38	14.0	20	290	307	384
1.976	81/41	C502_0020 ME40	2400	2000	3200	62	51	≤48	14.0	20	389	575	719
1.976	81/41	C502_0020 ME50	2400	2000	3200	90	59	≤60	14.0	20	389	575	719
3.077	477/155	C502_0031 ME30	2800	2400	4000	25	46	≤38	14.0	21	350	478	597
3.077	477/155	C502_0031 ME40	2800	2400	4000	47	51	≤48	14.0	20	451	478	597
3.077	477/155	C502_0031 ME50	2500	2400	4000	76	59	≤60	14.0	21	451	478	597
3.867	58/15	C502_0039 ME30	2800	2400	4000	20	46	≤38	14.0	21	385	600	750
3.867	58/15	C502_0039 ME40	2800	2400	4000	42	51	≤48	14.0	21	487	600	750
3.867	58/15	C502_0039 ME50	2500	2400	4000	71	59	≤60	14.0	21	487	600	750
4.629	162/35	C502_0046 ME20	3100	2700	4500	12	44	≤32	14.0	20	269	269	337
4.629	162/35	C502_0046 ME30	3100	2700	4500	18	46	≤38	14.0	21	404	704	881
4.629	162/35	C502_0046 ME40	3000	2700	4500	40	51	≤48	14.0	21	517	704	881
4.629	162/35	C502_0046 ME50	2500	2500	4000	69	59	≤60	14.0	21	517	704	881
5.850	117/20	C502_0059 ME30	3100	2700	4500	15	46	≤38	14.0	21	435	774	967
5.850	117/20	C502_0059 ME40	3000	2700	4500	37	51	≤48	14.0	21	559	774	967
5.850	117/20	C502_0059 ME50	2500	2500	4000	66	59	≤60	14.0	21	559	774	967
7.763	621/80	C502_0078 ME20	3400	3000	5000	7.8	44	≤32	14.0	21	320	396	496
7.763	621/80	C502_0078 ME30	3400	3000	5000	13	46	≤38	14.0	21	464	800	1110
7.763	621/80	C502_0078 ME40	3000	3000	4500	35	51	≤48	14.0	21	614	800	1110
7.763	621/80	C502_0078 ME50	2500	2500	4000	64	59	≤60	14.0	21	614	800	1110
8.263	1537/186	C502_0083 ME30	2800	2400	4000	20	46	≤38	12.0	23	800	920	1600
8.263	1537/186	C502_0083 ME40	2800	2400	4000	42	51	≤48	12.0	23	800	920	1600
8.263	1537/186	C502_0083 ME50	2500	2400	4000	71	59	≤60	12.0	23	800	920	1600
9.261	3445/372	C502_0093 ME30	2800	2400	4000	20	46	≤38	12.0	23	800	850	1600
9.261	3445/372	C502_0093 ME40	2800	2400	4000	42	51	≤48	12.0	23	800	850	1600
9.261	3445/372	C502_0093 ME50	2500	2400	4000	71	59	≤60	12.0	23	800	850	1600
10.38	841/81	C502_0105 ME30	2800	2400	4000	18	46	≤38	12.0	23	800	920	1600

i	i_{exakt}	Type	n_{1MAXDB} EL1,2,3,4 [rpm]	n_{1MAXDB} EL5,6 [rpm]	n_{1MAXZB} [rpm]	J_1 [kgcm²]	m [kg]	d_{MW} [mm]	$\Delta\varphi_2$ [arcmin]	C_2 [Nm/arcmin]	M_{2N} [Nm]	M_{2acc} [Nm]	M_{2NOT} [Nm]
C502 ($M_{2acc,max}$ = 920 Nm)													
10.38	841/81	C502_0105 ME40	2800	2400	4000	40	51	≤48	12.0	23	800	920	1600
10.38	841/81	C502_0105 ME50	2500	2400	4000	69	59	≤60	12.0	23	800	920	1600
11.64	1885/162	C502_0115 ME30	2800	2400	4000	17	46	≤38	12.0	23	800	850	1600
11.64	1885/162	C502_0115 ME40	2800	2400	4000	39	51	≤48	12.0	23	800	850	1600
11.64	1885/162	C502_0115 ME50	2500	2400	4000	68	59	≤60	12.0	23	800	850	1600
12.43	87/7	C502_0125 ME20	3100	2700	4500	10	44	≤32	12.0	23	723	723	904
12.43	87/7	C502_0125 ME30	3100	2700	4500	16	46	≤38	12.0	23	800	920	1600
12.43	87/7	C502_0125 ME40	3000	2700	4500	38	51	≤48	12.0	23	800	920	1600
12.43	87/7	C502_0125 ME50	2500	2500	4000	67	59	≤60	12.0	23	800	920	1600
13.93	195/14	C502_0140 ME20	3100	2700	4500	10	44	≤32	12.0	23	800	811	1013
13.93	195/14	C502_0140 ME30	3100	2700	4500	16	46	≤38	12.0	23	800	850	1600
13.93	195/14	C502_0140 ME40	3000	2700	4500	37	51	≤48	12.0	23	800	850	1600
13.93	195/14	C502_0140 ME50	2500	2500	4000	67	59	≤60	12.0	23	800	850	1600
15.71	377/24	C502_0155 ME30	3100	2700	4500	14	46	≤38	12.0	23	800	920	1600
15.71	377/24	C502_0155 ME40	3000	2700	4500	36	51	≤48	12.0	23	800	920	1600
15.71	377/24	C502_0155 ME50	2500	2500	4000	65	59	≤60	12.0	23	800	920	1600
17.60	845/48	C502_0175 ME30	3100	2700	4500	14	46	≤38	12.0	23	800	850	1600
17.60	845/48	C502_0175 ME40	3000	2700	4500	36	51	≤48	12.0	23	800	850	1600
17.60	845/48	C502_0175 ME50	2500	2500	4000	65	59	≤60	12.0	23	800	850	1600
20.84	667/32	C502_0210 ME20	3400	3000	5000	7.1	44	≤32	12.0	23	800	920	1331
20.84	667/32	C502_0210 ME30	3400	3000	5000	13	46	≤38	12.0	23	800	920	1600
20.84	667/32	C502_0210 ME40	3000	3000	4500	34	51	≤48	12.0	23	800	920	1600
20.84	667/32	C502_0210 ME50	2500	2500	4000	64	59	≤60	12.0	23	800	920	1600
23.36	1495/64	C502_0230 ME20	3400	3000	5000	7.1	44	≤32	12.0	23	800	850	1491
23.36	1495/64	C502_0230 ME30	3400	3000	5000	13	46	≤38	12.0	23	800	850	1600
23.36	1495/64	C502_0230 ME40	3000	3000	4500	34	51	≤48	12.0	23	800	850	1600
23.36	1495/64	C502_0230 ME50	2500	2500	4000	63	59	≤60	12.0	23	800	850	1600
25.07	2407/96	C502_0250 ME20	3400	3000	5000	6.3	44	≤32	12.0	23	800	920	1444
25.07	2407/96	C502_0250 ME30	3400	3000	5000	12	46	≤38	12.0	23	800	920	1600
25.07	2407/96	C502_0250 ME40	3000	3000	4500	34	51	≤48	12.0	23	800	920	1600
25.07	2407/96	C502_0250 ME50	2500	2500	4000	63	59	≤60	12.0	23	800	920	1600
28.10	5395/192	C502_0280 ME20	3400	3000	5000	6.3	44	≤32	12.0	23	800	850	1600
28.10	5395/192	C502_0280 ME30	3400	3000	5000	12	46	≤38	12.0	23	800	850	1600
28.10	5395/192	C502_0280 ME40	3000	3000	4500	34	51	≤48	12.0	23	800	850	1600
28.10	5395/192	C502_0280 ME50	2500	2500	4000	63	59	≤60	12.0	23	800	850	1600
31.23	406/13	C502_0310 ME20	3400	3000	5000	5.7	44	≤32	12.0	23	800	920	1524
31.23	406/13	C502_0310 ME30	3400	3000	5000	11	46	≤38	12.0	23	800	920	1524
35.00	35/1	C502_0350 ME20	3400	3000	5000	5.6	44	≤32	12.0	23	800	850	1600
35.00	35/1	C502_0350 ME30	3400	3000	5000	11	46	≤38	12.0	23	800	850	1600
41.69	667/16	C502_0420 ME20	3400	3000	5000	5.0	44	≤32	12.0	23	800	920	1600
41.69	667/16	C502_0420 ME30	3400	3000	5000	10	46	≤38	12.0	23	800	920	1600
46.72	1495/32	C502_0470 ME20	3400	3000	5000	5.0	44	≤32	12.0	23	800	850	1600
46.72	1495/32	C502_0470 ME30	3400	3000	5000	10	46	≤38	12.0	23	800	850	1600
49.82	1943/39	C502_0500 ME20	3400	3000	5000	4.8	44	≤32	12.0	23	800	920	1600
49.82	1943/39	C502_0500 ME30	3400	3000	5000	10	46	≤38	12.0	23	800	920	1600
55.83	335/6	C502_0560 ME20	3400	3000	5000	4.8	44	≤32	12.0	23	800	850	1600
55.83	335/6	C502_0560 ME30	3400	3000	5000	10	46	≤38	12.0	23	800	850	1600
62.43	4495/72	C502_0620 ME20	3400	3000	5000	3.0	44	≤24	12.0	23	714	857	1084
69.97	10075/144	C502_0700 ME20	3400	3000	5000	3.0	44	≤24	12.0	23	800	850	1214
C503 ($M_{2acc,max}$ = 920 Nm)													
80.60	19343/240	C503_0810 ME20	3400	3000	5000	2.9	48	≤24	12.0	23	800	920	1331
90.32	8671/96	C503_0900 ME20	3400	3000	5000	2.9	48	≤24	12.0	23	800	850	1491
108.6	31291/288	C503_1090 ME20	3400	3000	5000	2.8	48	≤24	12.0	23	800	850	1600
135.3	406/3	C503_1350 ME20	3400	3000	5000	2.8	48	≤24	12.0	23	800	850	1600
180.6	8671/48	C503_1810 ME20	3400	3000	5000	2.8	48	≤24	12.0	23	800	850	1600
215.9	1943/9	C503_2160 ME20	3400	3000	5000	2.7	48	≤24	12.0	23	800	850	1600
270.5	58435/216	C503_2710 ME20	3400	3000	5000	2.7	48	≤24	12.0	23	800	850	1214
C612 ($M_{2acc,max}$ = 1650 Nm)													
4.184	2745/656	C612_0042 ME40	2300	1900	3000	79	66	≤48	10.0	70	927	1219	1523
4.184	2745/656	C612_0042 ME50	2300	1900	3000	107	74	≤60	10.0	72	927	1219	1523
5.083	61/12	C612_0051 ME40	2300	1900	3000	68	66	≤48	10.0	71	989	1479	1849
5.083	61/12	C612_0051 ME50	2300	1900	3000	96	74	≤60	10.0	72	989	1479	1849
5.854	240/41	C612_0059 ME40	2300	1900	3000	74	66	≤48	10.0	72	1037	1380	2130
5.854	240/41	C612_0059 ME50	2300	1900	3000	102	74	≤60	10.0	73	1037	1380	2130

i	i_{exakt}	Type	n_{1MAXDB} EL1,2,3,4 [rpm]	n_{1MAXDB} EL5,6 [rpm]	n_{1MAXZB} [rpm]	J_1 [kgcm²]	m [kg]	d_{MW} [mm]	$\Delta\varphi_2$ [arcmin]	C_2 [Nm/arcmin]	M_{2N} [Nm]	M_{2acc} [Nm]	M_{2NOT} [Nm]
C612 ($M_{2acc,max}$ = 1650 Nm)													
6.518	3233/496	C612_0065 ME30	2700	2300	3800	35	61	≤38	10.0	72	829	1012	1265
6.518	3233/496	C612_0065 ME40	2700	2300	3800	58	66	≤48	10.0	72	1075	1612	2372
6.518	3233/496	C612_0065 ME50	2500	2300	3800	86	74	≤60	10.0	73	1075	1612	2372
7.111	64/9	C612_0071 ME40	2300	1900	3000	64	66	≤48	10.0	73	1107	1380	2586
7.111	64/9	C612_0071 ME50	2300	1900	3000	92	74	≤60	10.0	73	1107	1380	2586
8.190	1769/216	C612_0082 ME30	2700	2300	3800	29	61	≤38	10.0	73	913	1268	1585
8.190	1769/216	C612_0082 ME40	2700	2300	3800	51	66	≤48	10.0	73	1160	1650	2900
8.190	1769/216	C612_0082 ME50	2500	2300	3800	79	74	≤60	10.0	74	1160	1650	2900
9.118	848/93	C612_0091 ME30	2700	2300	3800	33	61	≤38	10.0	73	1160	1380	1770
9.118	848/93	C612_0091 ME40	2700	2300	3800	56	66	≤48	10.0	73	1202	1380	2600
9.118	848/93	C612_0091 ME50	2500	2300	3800	83	74	≤60	10.0	74	1202	1380	2600
10.11	3721/368	C612_0100 ME30	3000	2600	4000	24	61	≤38	10.0	73	965	1439	1799
10.11	3721/368	C612_0100 ME40	3000	2600	4000	47	66	≤48	10.0	73	1244	1650	2900
10.11	3721/368	C612_0100 ME50	2500	2500	4000	75	74	≤60	10.0	74	1244	1650	2900
11.46	928/81	C612_0115 ME30	2700	2300	3800	27	61	≤38	10.0	74	1277	1380	2217
11.46	928/81	C612_0115 ME40	2700	2300	3800	50	66	≤48	10.0	74	1297	1380	2600
11.46	928/81	C612_0115 ME50	2500	2300	3800	78	74	≤60	10.0	74	1297	1380	2600
12.58	2013/160	C612_0125 ME30	3000	2600	4000	20	61	≤38	10.0	74	1029	1650	2120
12.58	2013/160	C612_0125 ME40	3000	2600	4000	43	66	≤48	10.0	74	1338	1650	2900
12.58	2013/160	C612_0125 ME50	2500	2500	4000	71	74	≤60	10.0	74	1338	1650	2900
14.15	976/69	C612_0140 ME30	3000	2600	4000	23	61	≤38	10.0	74	1300	1380	2516
14.15	976/69	C612_0140 ME40	3000	2600	4000	46	66	≤48	10.0	74	1300	1380	2600
14.15	976/69	C612_0140 ME50	2500	2500	4000	74	74	≤60	10.0	74	1300	1380	2600
16.20	1037/64	C612_0160 ME30	3200	2900	4500	17	61	≤38	10.0	74	1086	1650	2296
16.20	1037/64	C612_0160 ME40	3000	2900	4500	39	66	≤48	10.0	74	1450	1650	2900
16.20	1037/64	C612_0160 ME50	2500	2500	4000	67	74	≤60	10.0	74	1450	1650	2900
17.60	88/5	C612_0175 ME30	3000	2600	4000	20	61	≤38	10.0	74	1300	1380	2600
17.60	88/5	C612_0175 ME40	3000	2600	4000	42	66	≤48	10.0	74	1300	1380	2600
17.60	88/5	C612_0175 ME50	2500	2500	4000	70	74	≤60	10.0	74	1300	1380	2600
19.61	549/28	C612_0195 ME30	3200	2900	4500	15	61	≤38	10.0	74	1129	1650	2560
19.61	549/28	C612_0195 ME40	3000	2900	4500	37	66	≤48	10.0	74	1450	1650	2560
19.61	549/28	C612_0195 ME50	2500	2500	4000	66	74	≤60	10.0	74	1450	1650	2560
22.67	68/3	C612_0230 ME30	3200	2900	4500	16	61	≤38	10.0	74	1300	1380	2600
22.67	68/3	C612_0230 ME40	3000	2900	4500	39	66	≤48	10.0	74	1300	1380	2600
22.67	68/3	C612_0230 ME50	2500	2500	4000	67	74	≤60	10.0	74	1300	1380	2600
24.93	5185/208	C612_0250 ME30	3200	2900	4500	13	61	≤38	10.0	74	1169	1650	2900
24.93	5185/208	C612_0250 ME40	3000	2900	4500	35	66	≤48	10.0	74	1450	1650	2900
24.93	5185/208	C612_0250 ME50	2500	2500	4000	64	74	≤60	10.0	74	1450	1650	2900
27.43	192/7	C612_0270 ME30	3200	2900	4500	15	61	≤38	10.0	74	1300	1380	2600
27.43	192/7	C612_0270 ME40	3000	2900	4500	37	66	≤48	10.0	74	1300	1380	2600
27.43	192/7	C612_0270 ME50	2500	2500	4000	66	74	≤60	10.0	74	1300	1380	2600
32.41	1037/32	C612_0320 ME30	3200	2900	4500	12	61	≤38	10.0	74	1218	1650	2900
32.41	1037/32	C612_0320 ME40	3000	2900	4500	34	66	≤48	10.0	74	1450	1650	2900
32.41	1037/32	C612_0320 ME50	2500	2500	4000	63	74	≤60	10.0	74	1450	1650	2900
34.87	1360/39	C612_0350 ME30	3200	2900	4500	13	61	≤38	10.0	74	1300	1380	2600
34.87	1360/39	C612_0350 ME40	3000	2900	4500	35	66	≤48	10.0	74	1300	1380	2600
34.87	1360/39	C612_0350 ME50	2500	2500	4000	64	74	≤60	10.0	74	1300	1380	2600
39.40	1891/48	C612_0390 ME30	3200	2900	4500	11	61	≤38	10.0	74	1221	1279	1598
45.33	136/3	C612_0450 ME30	3200	2900	4500	12	61	≤38	10.0	74	1300	1380	2600
45.33	136/3	C612_0450 ME40	3000	2900	4500	34	66	≤48	10.0	74	1300	1380	2600
45.33	136/3	C612_0450 ME50	2500	2500	4000	63	74	≤60	10.0	74	1300	1380	2600
55.11	496/9	C612_0550 ME30	3200	2900	4500	11	61	≤38	10.0	74	1300	1380	2236
68.89	620/9	C612_0690 ME30	3200	2900	4500	10	61	≤38	10.0	74	1300	1380	2361
C613 ($M_{2acc,max}$ = 1650 Nm)													
49.28	31537/640	C613_0490 ME30	3200	2900	4500	11	70	≤38	10.0	74	1450	1551	1939
63.46	48739/768	C613_0630 ME30	3200	2900	4500	10	70	≤38	10.0	74	1450	1650	2296
75.81	5307/70	C613_0760 ME20	3200	2900	4500	3.1	68	≤24	10.0	74	913	913	1141
76.80	8601/112	C613_0770 ME30	3200	2900	4500	10	70	≤38	10.0	74	1450	1650	2560
88.78	799/9	C613_0890 ME30	3200	2900	4500	10	70	≤38	10.0	74	1300	1380	2600
97.63	243695/2496	C613_0980 ME30	3200	2900	4500	10	70	≤38	10.0	74	1450	1650	2900
106.1	3712/35	C613_1060 ME20	3200	2900	4500	3.0	68	≤24	10.0	74	1277	1277	1597
107.4	752/7	C613_1070 ME30	3200	2900	4500	10	70	≤38	10.0	74	1300	1380	2600
126.9	48739/384	C613_1270 ME30	3200	2900	4500	10	70	≤38	10.0	74	1450	1650	2900
134.8	15776/117	C613_1350 ME20	3200	2900	4500	2.9	68	≤24	10.0	74	1300	1376	1720

i	i_{exakt}	Type	n_{1MAXDB} EL1,2,3,4 [rpm]	n_{1MAXDB} EL5,6 [rpm]	n_{1MAXZB} [rpm]	J_1 [kgcm²]	m [kg]	d_{MW} [mm]	$\Delta\varphi_2$ [arcmin]	C_2 [Nm/arcmin]	M_{2N} [Nm]	M_{2acc} [Nm]	M_{2NOT} [Nm]
C613 ($M_{2acc,max}$ = 1650 Nm)													
136.6	15980/117	C613_1370 ME30	3200	2900	4500	10	70	≤38	10.0	74	1300	1380	2600
175.3	7888/45	C613_1750 ME20	3200	2900	4500	2.8	68	≤24	10.0	74	1300	1380	2007
177.6	1598/9	C613_1780 ME30	3200	2900	4500	10	70	≤38	10.0	74	1300	1380	2600
213.1	28768/135	C613_2130 ME20	3200	2900	4500	2.8	68	≤24	10.0	74	1300	1380	2236
266.4	7192/27	C613_2660 ME20	3200	2900	4500	2.8	68	≤24	10.0	74	1300	1380	2361
C712 ($M_{2acc,max}$ = 2760 Nm)													
4.259	477/112	C712_0043 ME40	2200	1900	2800	128	102	≤48	10.0	112	1240	1240	1550
4.259	477/112	C712_0043 ME50	2200	1900	2800	156	109	≤60	10.0	116	1240	1240	1550
5.311	1827/344	C712_0053 ME40	2200	1900	2800	103	102	≤48	10.0	116	1546	1546	1933
5.311	1827/344	C712_0053 ME50	2200	1900	2800	131	109	≤60	10.0	118	1546	1546	1933
7.357	3480/473	C712_0074 ME40	2200	1900	2800	97	102	≤48	10.0	119	1852	2142	2677
7.357	3480/473	C712_0074 ME50	2200	1900	2800	125	109	≤60	10.0	120	1852	2142	2677
8.490	4347/512	C712_0085 ME40	2600	2300	3500	70	102	≤48	10.0	119	1943	2471	3089
8.490	4347/512	C712_0085 ME50	2500	2300	3500	98	109	≤60	10.0	120	1943	2471	3089
9.912	4599/464	C712_0099 ME30	2900	2600	4000	41	97	≤38	10.0	120	1175	1539	1923
9.912	4599/464	C712_0099 ME40	2900	2600	4000	64	102	≤48	10.0	120	2046	2760	3606
9.912	4599/464	C712_0099 ME50	2500	2500	4000	91	109	≤60	10.0	121	2046	2760	3606
11.76	1035/88	C712_0120 ME40	2600	2300	3500	68	102	≤48	10.0	121	2000	2300	4000
11.76	1035/88	C712_0120 ME50	2500	2300	3500	96	109	≤60	10.0	121	2000	2300	4000
13.18	4851/368	C712_0130 ME30	2900	2600	4000	31	97	≤38	10.0	121	1250	1820	2275
13.18	4851/368	C712_0130 ME40	2900	2600	4000	54	102	≤48	10.0	121	2250	2760	4797
13.18	4851/368	C712_0130 ME50	2500	2500	4000	82	109	≤60	10.0	121	2250	2760	4797
13.73	4380/319	C712_0135 ME30	2900	2600	4000	39	97	≤38	10.0	121	1628	2131	2664
13.73	4380/319	C712_0135 ME40	2900	2600	4000	62	102	≤48	10.0	121	2000	2300	4000
13.73	4380/319	C712_0135 ME50	2500	2500	4000	90	109	≤60	10.0	122	2000	2300	4000
16.73	1071/64	C712_0165 ME30	3100	2900	4500	25	97	≤38	10.0	121	1359	2177	2722
16.73	1071/64	C712_0165 ME40	3000	2900	4500	47	102	≤48	10.0	121	2400	2760	4800
16.73	1071/64	C712_0165 ME50	2500	2500	4000	75	109	≤60	10.0	122	2400	2760	4800
18.26	420/23	C712_0185 ME30	2900	2600	4000	30	97	≤38	10.0	122	1731	2300	3151
18.26	420/23	C712_0185 ME40	2900	2600	4000	53	102	≤48	10.0	122	2000	2300	4000
18.26	420/23	C712_0185 ME50	2500	2500	4000	81	109	≤60	10.0	122	2000	2300	4000
20.67	1323/64	C712_0210 ME30	3100	2900	4500	20	97	≤38	10.0	122	1375	2257	2821
20.67	1323/64	C712_0210 ME40	3000	2900	4500	43	102	≤48	10.0	122	2400	2760	4800
20.67	1323/64	C712_0210 ME50	2500	2500	4000	71	109	≤60	10.0	122	2400	2760	4800
23.18	255/11	C712_0230 ME30	3100	2900	4500	24	97	≤38	10.0	122	1883	2300	3770
23.18	255/11	C712_0230 ME40	3000	2900	4500	47	102	≤48	10.0	122	2000	2300	4000
23.18	255/11	C712_0230 ME50	2500	2500	4000	74	109	≤60	10.0	122	2000	2300	4000
25.31	405/16	C712_0250 ME30	3100	2900	4500	17	97	≤38	10.0	122	1447	2536	3170
25.31	405/16	C712_0250 ME40	3000	2900	4500	39	102	≤48	10.0	122	2400	2536	3170
25.31	405/16	C712_0250 ME50	2500	2500	4000	68	109	≤60	10.0	122	2400	2536	3170
28.64	315/11	C712_0290 ME30	3100	2900	4500	20	97	≤38	10.0	122	1905	2300	3907
28.64	315/11	C712_0290 ME40	3000	2900	4500	43	102	≤48	10.0	122	2000	2300	4000
28.64	315/11	C712_0290 ME50	2500	2500	4000	70	109	≤60	10.0	122	2000	2300	4000
33.80	2163/64	C712_0340 ME30	3100	2900	4500	14	97	≤38	10.0	122	1486	2760	3710
33.80	2163/64	C712_0340 ME40	3000	2900	4500	36	102	≤48	10.0	122	2400	2760	3710
33.80	2163/64	C712_0340 ME50	2500	2500	4000	65	109	≤60	10.0	122	2400	2760	3710
35.07	2700/77	C712_0350 ME30	3100	2900	4500	17	97	≤38	10.0	122	2000	2300	4000
35.07	2700/77	C712_0350 ME40	3000	2900	4500	39	102	≤48	10.0	122	2000	2300	4000
35.07	2700/77	C712_0350 ME50	2500	2500	4000	68	109	≤60	10.0	122	2000	2300	4000
41.02	2625/64	C712_0410 ME30	3100	2900	4500	13	97	≤38	10.0	122	1531	2514	4070
41.02	2625/64	C712_0410 ME40	3000	2900	4500	35	102	≤48	10.0	122	2095	2514	4070
41.02	2625/64	C712_0410 ME50	2500	2500	4000	64	109	≤60	10.0	122	2095	2514	4070
46.82	515/11	C712_0470 ME30	3100	2900	4500	14	97	≤38	10.0	122	2000	2300	4000
46.82	515/11	C712_0470 ME40	3000	2900	4500	36	102	≤48	10.0	122	2000	2300	4000
46.82	515/11	C712_0470 ME50	2500	2500	4000	65	109	≤60	10.0	122	2000	2300	4000
56.82	625/11	C712_0570 ME30	3100	2900	4500	13	97	≤38	10.0	122	2000	2300	4000
56.82	625/11	C712_0570 ME40	3000	2900	4500	35	102	≤48	10.0	122	2000	2300	4000
56.82	625/11	C712_0570 ME50	2500	2500	4000	64	109	≤60	10.0	122	2000	2300	4000
69.55	765/11	C712_0700 ME30	3100	2900	4500	12	97	≤38	10.0	122	2000	2122	2652
C713 ($M_{2acc,max}$ = 2760 Nm)													
50.85	18711/368	C713_0510 ME40	3000	2900	4500	34	115	≤48	10.0	122	2400	2760	4797
64.55	4131/64	C713_0650 ME40	3000	2900	4500	34	115	≤48	10.0	122	2400	2760	4800
79.73	5103/64	C713_0800 ME40	3000	2900	4500	34	115	≤48	10.0	122	2400	2760	4800
80.97	20727/256	C713_0810 ME30	3100	2900	4500	11	110	≤38	10.0	122	2224	2257	2821

i	i_{exakt}	Type	n_{1MAXDB} EL1,2,3,4 [rpm]	n_{1MAXDB} EL5,6 [rpm]	n_{1MAXZB} [rpm]	J_1 [kgcm²]	m [kg]	d_{MW} [mm]	$\Delta\varphi_2$ [arcmin]	C_2 [Nm/arcmin]	M_{2N} [Nm]	M_{2acc} [Nm]	M_{2NOT} [Nm]
C713 ($M_{2acc,max}$ = 2760 Nm)													
89.42	6885/77	C713_0890 ME40	3000	2900	4500	34	115	≤48	10.0	122	2000	2300	4000
97.63	10935/112	C713_0980 ME40	3000	2900	4500	34	115	≤48	10.0	122	2400	2536	3170
99.14	6345/64	C713_0990 ME30	3100	2900	4500	10	110	≤38	10.0	122	2354	2536	3170
110.5	1215/11	C713_1100 ME40	3000	2900	4500	34	115	≤48	10.0	122	2000	2300	4000
130.4	8343/64	C713_1300 ME40	3000	2900	4500	33	115	≤48	10.0	122	2400	2760	3710
132.4	33887/256	C713_1320 ME30	3100	2900	4500	10	110	≤38	10.0	122	2400	2760	3710
135.3	72900/539	C713_1350 ME40	3000	2900	4500	34	115	≤48	10.0	122	2000	2300	4000
137.3	10575/77	C713_1370 ME30	3100	2900	4500	10	110	≤38	10.0	122	2000	2300	4000
180.6	13905/77	C713_1810 ME40	3000	2900	4500	33	115	≤48	10.0	122	2000	2300	4000
183.4	24205/132	C713_1830 ME30	3100	2900	4500	10	110	≤38	10.0	122	2000	2300	4000
219.2	16875/77	C713_2190 ME40	3000	2900	4500	33	115	≤48	10.0	122	2000	2300	4000
222.5	29375/132	C713_2230 ME30	3100	2900	4500	10	110	≤38	10.0	122	2000	2300	4000
C812 ($M_{2acc,max}$ = 4800 Nm)													
6.670	767/115	C812_0067 ME40	2500	2200	3500	164	161	≤48	10.0	139	1942	1942	2427
6.670	767/115	C812_0067 ME50	2500	2200	3500	192	169	≤60	10.0	142	1942	1942	2427
9.043	208/23	C812_0090 ME40	2500	2200	3500	153	161	≤48	10.0	197	2633	2633	3291
9.043	208/23	C812_0090 ME50	2500	2200	3500	181	169	≤60	10.0	199	2633	2633	3291
10.15	944/93	C812_0100 ME40	2700	2400	3800	106	161	≤48	10.0	143	2677	2955	3693
10.15	944/93	C812_0100 ME50	2500	2400	3800	134	169	≤60	10.0	144	2955	2955	3693
12.75	5546/435	C812_0125 ME40	2700	2400	3800	86	161	≤48	10.0	144	2837	3710	4638
12.75	5546/435	C812_0125 ME50	2500	2400	3800	114	169	≤60	10.0	144	3615	3710	4638
13.76	1280/93	C812_0140 ME40	2700	2400	3800	101	161	≤48	10.0	201	3600	4006	5008
13.76	1280/93	C812_0140 ME50	2500	2400	3800	129	169	≤60	10.0	202	3600	4006	5008
17.10	1180/69	C812_0170 ME40	2900	2700	4300	67	161	≤48	10.0	144	3037	4800	6222
17.10	1180/69	C812_0170 ME50	2500	2500	4000	95	169	≤60	10.0	145	3986	4800	6222
17.29	1504/87	C812_0175 ME40	2700	2400	3800	83	161	≤48	10.0	202	3600	4140	6289
17.29	1504/87	C812_0175 ME50	2500	2400	3800	111	169	≤60	10.0	202	3600	4140	6289
20.26	6077/300	C812_0200 ME40	2900	2700	4300	59	161	≤48	10.0	145	3137	4800	6759
20.26	6077/300	C812_0200 ME50	2500	2500	4000	87	169	≤60	10.0	145	4192	4800	6759
23.19	1600/69	C812_0230 ME40	2900	2700	4300	66	161	≤48	10.0	203	3600	4140	7200
23.19	1600/69	C812_0230 ME50	2500	2500	4000	94	169	≤60	10.0	203	3600	4140	7200
26.06	3127/120	C812_0260 ME40	2900	2700	4300	50	161	≤48	10.0	145	3241	4800	7452
26.06	3127/120	C812_0260 ME50	2500	2500	4000	78	169	≤60	10.0	145	4200	4800	7452
27.47	412/15	C812_0270 ME40	2900	2700	4300	58	161	≤48	10.0	203	3600	4140	7200
27.47	412/15	C812_0270 ME50	2500	2500	4000	86	169	≤60	10.0	203	3600	4140	7200
33.59	2183/65	C812_0340 ME40	2900	2700	4300	44	161	≤48	10.0	145	3365	4800	8400
33.59	2183/65	C812_0340 ME50	2500	2500	4000	72	169	≤60	10.0	145	4200	4800	8400
35.33	106/3	C812_0350 ME40	2900	2700	4300	50	161	≤48	10.0	203	3600	4140	7200
35.33	106/3	C812_0350 ME50	2500	2500	4000	78	169	≤60	10.0	203	3600	4140	7200
39.94	2596/65	C812_0400 ME40	2900	2700	4300	40	161	≤48	10.0	145	3470	3686	4608
39.94	2596/65	C812_0400 ME50	2500	2500	4000	69	169	≤60	10.0	145	3686	3686	4608
45.54	592/13	C812_0460 ME40	2900	2700	4300	44	161	≤48	10.0	203	3600	4140	7200
45.54	592/13	C812_0460 ME50	2500	2500	4000	72	169	≤60	10.0	203	3600	4140	7200
54.15	704/13	C812_0540 ME40	2900	2700	4300	40	161	≤48	10.0	203	3600	4140	6248
54.15	704/13	C812_0540 ME50	2500	2500	4000	69	169	≤60	10.0	203	3600	4140	6248
68.89	620/9	C812_0690 ME40	2900	2700	4300	37	161	≤48	10.0	203	3600	4140	6752
68.89	620/9	C812_0690 ME50	2500	2500	4000	66	169	≤60	10.0	204	3600	4140	6752
C813 ($M_{2acc,max}$ = 4800 Nm)													
49.18	49914/1015	C813_0490 ME40	2900	2700	4300	37	174	≤48	10.0	203	3710	3710	4638
65.96	10620/161	C813_0660 ME40	2900	2700	4300	35	174	≤48	10.0	203	4188	4800	6222
78.13	54693/700	C813_0780 ME40	2900	2700	4300	35	174	≤48	10.0	204	4200	4800	6759
79.34	285619/3600	C813_0790 ME30	2900	2700	4300	12	169	≤38	10.0	203	2456	2486	3108
89.44	14400/161	C813_0890 ME40	2900	2700	4300	35	174	≤48	10.0	204	3600	4140	7200
90.82	18800/207	C813_0910 ME30	2900	2700	4300	12	169	≤38	10.0	204	2812	2858	3573
100.5	28143/280	C813_1010 ME40	2900	2700	4300	34	174	≤48	10.0	204	4200	4800	7452
105.9	3708/35	C813_1060 ME40	2900	2700	4300	35	174	≤48	10.0	204	3600	4140	7200
107.6	4841/45	C813_1080 ME30	2900	2700	4300	12	169	≤38	10.0	204	3331	3371	4214
129.5	58941/455	C813_1300 ME40	2900	2700	4300	34	174	≤48	10.0	204	4200	4800	8400
136.3	954/7	C813_1360 ME40	2900	2700	4300	34	174	≤48	10.0	204	3600	4140	7200
138.4	2491/18	C813_1380 ME30	2900	2700	4300	11	169	≤38	10.0	204	3600	3718	4648
175.6	15984/91	C813_1760 ME40	2900	2700	4300	34	174	≤48	10.0	204	3600	4140	7200
178.4	6956/39	C813_1780 ME30	2900	2700	4300	11	169	≤38	10.0	204	3600	4140	5251
208.9	19008/91	C813_2090 ME40	2900	2700	4300	34	174	≤48	10.0	204	3600	4140	6248
212.1	8272/39	C813_2120 ME30	2900	2700	4300	10	169	≤38	10.0	204	3600	4140	6248

i	i_{exakt}	Type	n_{1MAXDB} EL1,2,3,4 [rpm]	n_{1MAXDB} EL5,6 [rpm]	n_{1MAXZB} [rpm]	J_1 [kgcm²]	m [kg]	d_{MW} [mm]	$\Delta\varphi_2$ [arcmin]	C_2 [Nm/arcmin]	M_{2N} [Nm]	M_{2acc} [Nm]	M_{2NOT} [Nm]
C813 ($M_{2acc,max}$ = 4800 Nm)													
265.7	1860/7	C813_2660 ME40	2900	2700	4300	33	174	≤48	10.0	204	3600	4140	6752
269.8	7285/27	C813_2700 ME30	2900	2700	4300	10	169	≤38	10.0	204	3600	4140	6752
C912 ($M_{2acc,max}$ = 7211 Nm)													
20.15	2257/112	C912_0200 ME50	2500	2500	4000	120	259	≤60	10.0	260	4802	5630	7037
28.63	2405/84	C912_0290 ME50	2500	2500	4000	116	259	≤60	10.0	391	6000	6500	9997
32.13	3599/112	C912_0320 ME50	2500	2500	4000	88	259	≤60	10.0	261	5136	6758	8448
39.30	4087/104	C912_0390 ME50	2500	2500	4000	80	259	≤60	10.0	261	5195	7211	10370
45.66	3835/84	C912_0460 ME50	2500	2500	4000	87	259	≤60	10.0	392	6000	6500	12000
55.83	335/6	C912_0560 ME50	2500	2500	4000	79	259	≤60	10.0	392	6000	6500	12000
69.97	10075/144	C912_0700 ME50	2500	2500	4000	73	259	≤60	10.0	392	5520	5520	6900
C913 ($M_{2acc,max}$ = 8000 Nm)													
64.59	295545/4576	C913_0650 ME50	2500	2500	4000	68	288	≤60	10.0	392	7000	8000	12779
77.73	60939/784	C913_0780 ME40	2800	2600	4000	37	281	≤48	10.0	392	4988	5630	7037
79.06	115107/1456	C913_0790 ME50	2500	2500	4000	67	288	≤60	10.0	392	7000	8000	14000
91.76	8075/88	C913_0920 ME50	2500	2500	4000	68	288	≤60	10.0	393	6000	6500	12000
99.42	20679/208	C913_0990 ME50	2500	2500	4000	66	288	≤60	10.0	393	7000	8000	14000
110.4	21645/196	C913_1100 ME40	2800	2600	4000	37	281	≤48	10.0	392	6000	6500	9997
112.3	3145/28	C913_1120 ME50	2500	2500	4000	67	288	≤60	10.0	393	6000	6500	12000
126.1	183549/1456	C913_1260 ME50	2500	2500	4000	65	288	≤60	10.0	393	7000	8000	14000
141.3	565/4	C913_1410 ME50	2500	2500	4000	66	288	≤60	10.0	393	6000	6500	12000
176.1	34515/196	C913_1760 ME40	2800	2600	4000	35	281	≤48	10.0	393	6000	6500	12000
179.1	5015/28	C913_1790 ME50	2500	2500	4000	65	288	≤60	10.0	393	6000	6500	12000
215.4	3015/14	C913_2150 ME40	2800	2600	4000	35	281	≤48	10.0	393	6000	6500	12000

7.3 Dimensional drawings

In this chapter, you can find the dimensions of the gear units as well as example dimensions of the mountable motor adapters.

Dimensions can exceed the specifications of ISO 2768-mK due to casting tolerances or accumulation of individual tolerances.

We reserve the right to make dimensional changes due to ongoing technical development.

You can download 3D models of our standard drives at http://configurator.stoeber.de.

Tolerances

Axis height in accordance with DIN 747	Tolerance
Up to 50 mm	-0.4 mm
Up to 250 mm	-0.5 mm
Up to 630 mm	-0.6 mm

Solid shaft	Tolerance
Shaft ∅ fit ≤ 50 mm	DIN 748-1, ISO k6
Shaft ∅ fit > 50 mm	DIN 748-1, ISO m6
Feather keys	DIN 6885-1, high form A

Flange	Pilot tolerance
Up to 300 mm	ISO j6
Starting at 350 mm	ISO h6

Centering holes in solid shafts in accordance with DIN 332-2, DR shape

Thread size	M4	M5	M6	M8	M10	M12	M16	M20	M24
Thread depth [mm]	10	12.5	16	19	22	28	36	42	50

7.3.1 Solid shaft design with feather key, N housing design (foot)

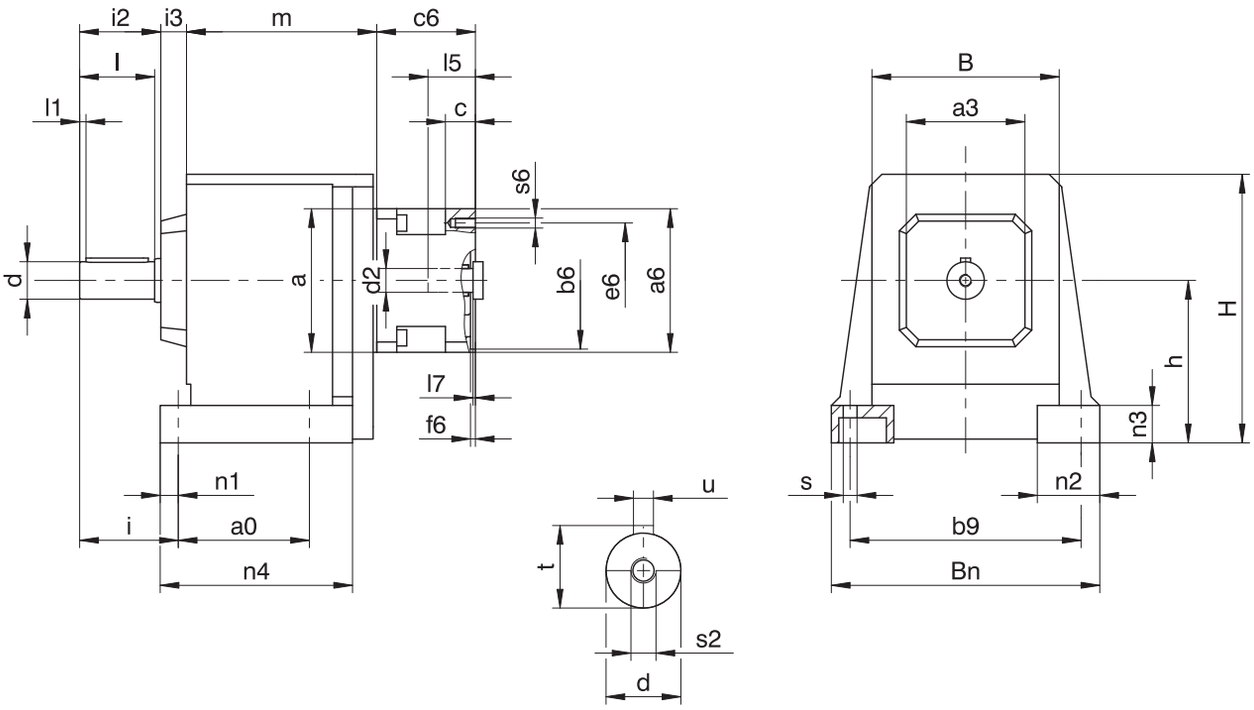

C203, C303, C612, C613: Motor adapter and gear unit are sometimes non-coaxial.

Options: C0 – C5 also available with solid shaft without feather key; on request starting at C6.

Dimensions of gear units

Type	a0	a3	b9	B	Bn	Ød	h	H	i	i2	i3	l	l1	n1	n2	n3	n4	Øs	s2	t	u
C0	62	60	110	92	132	20_{k6}	82	144	55	44	13	40	3	11	35	20	95.0	7	M6	22.5	A6×6×32
C1	70	80	150	124	176	25_{k6}	102	177	67	54	15	50	5	13	42	25	117.5	9	M10	28.0	A8×7×40
C2	85	95	170	138	200	30_{k6}	115	195	79	65	21	60	5	14	50	30	134.5	11	M10	33.0	A8×7×50
C3	105	95	185	150	215	30_{k6}	130	215	79	65	20	60	5	14	50	30	153.5	11	M10	33.0	A8×7×50
C4	110	110	220	175	255	40_{k6}	145	245	105	86	20	80	5	19	60	35	180.0	14	M16	43.0	A12×8×70
C5	130	130	245	192	290	40_{k6}	170	290	108	86	21	80	5	22	70	40	197.0	18	M16	43.0	A12×8×70
C6	215	177	245	225	300	50_{k6}	200	315	130	106	47	100	5	25	75	40	265.0	18	M16	53.5	A14×9×90
C7	235	192	300	265	365	60_{m6}	235	375	163	127	58	120	5	25	90	50	285.0	18	M20	64.0	A18×11×100
C8	300	223	340	310	435	70_{m6}	290	450	190	148	70	140	5	29	95	55	360.0	22	M20	74.5	A20×12×125
C9	340	277	400	365	510	90_{m6}	340	530	222	178	78	170	5	34	110	60	410.0	26	M24	95.0	A25×14×140

Type	ME10		ME20		ME30		ME40		ME50	
	a	m	a	m	a	m	a	m	a	m
C002	□98	97.5	□115	101.5	–	–	–	–	–	–
C102	□98	118.0	□115	122.0	□145	124.0	–	–	–	–
C103	∅140	155.0	–	–	–	–	–	–	–	–
C202	∅140	129.0	□115	133.0	□145	135.0	–	–	–	–
C203	∅140	166.0	∅160	176.0	–	–	–	–	–	–
C302	–	–	∅160	152.5	□145	154.5	□190	157.5	–	–
C303	∅140	185.5	∅160	195.5	–	–	–	–	–	–
C402	–	–	∅160	180.0	□145	182.0	□190	185.0	–	–
C403	–	–	∅160	223.0	–	–	–	–	–	–
C502	–	–	∅160	200.0	∅200	202.0	□190	205.0	∅300	219.0
C503	–	–	∅160	243.0	–	–	–	–	–	–
C612	–	–	–	–	∅200	180.0	□190	183.0	∅300	196.0
C613	–	–	∅160	222.0	∅200	242.0	–	–	–	–
C712	–	–	–	–	∅200	201.0	∅250	203.0	∅300	216.0
C713	–	–	–	–	∅200	262.0	∅250	274.0	–	–
C812	–	–	–	–	–	–	∅250	237.0	∅300	250.0
C813	–	–	–	–	∅200	296.0	∅250	308.0	–	–
C912	–	–	–	–	–	–	–	–	∅300	279.0
C913	–	–	–	–	–	–	∅250	337.0	∅300	362.0

Example dimensions for the motor connection

Type	Øb6	Øe6	Ød2max	l5	□a6	c	c6	f6	l7	s6
C_ME10	95^{H7}	115	19	41	100	21	61.0	4.0	3.0	M8
C_ME20	110^{H7}	130	32	53	120	24	74.0	4.0	3.5	M8
C_ME30	130^{H7}	165	38	62	150	26	86.0	5.5	4.5	M10
C_ME40	180^{H7}	215	48	82	204	35	123.0	5.5	5.5	M12
C_ME50	180^{H7}	215	60	86	230	43	124.5	6.0	5.0	M12

In the table above, you will find example dimensions for the motor connection for the ME motor adapter. **Note that when dimension c is lengthened (depending on the motor used), dimensions c6, l5 and lg are also lengthened accordingly.**

You will find additional motor connection dimensions for the ME motor adapter in our STOBER Configurator at http://configurator.stoeber.de. Here, you can directly download a 3D model of your drive.

7.3.2 Solid shaft design with feather key, G housing design (pitch circle diameter)

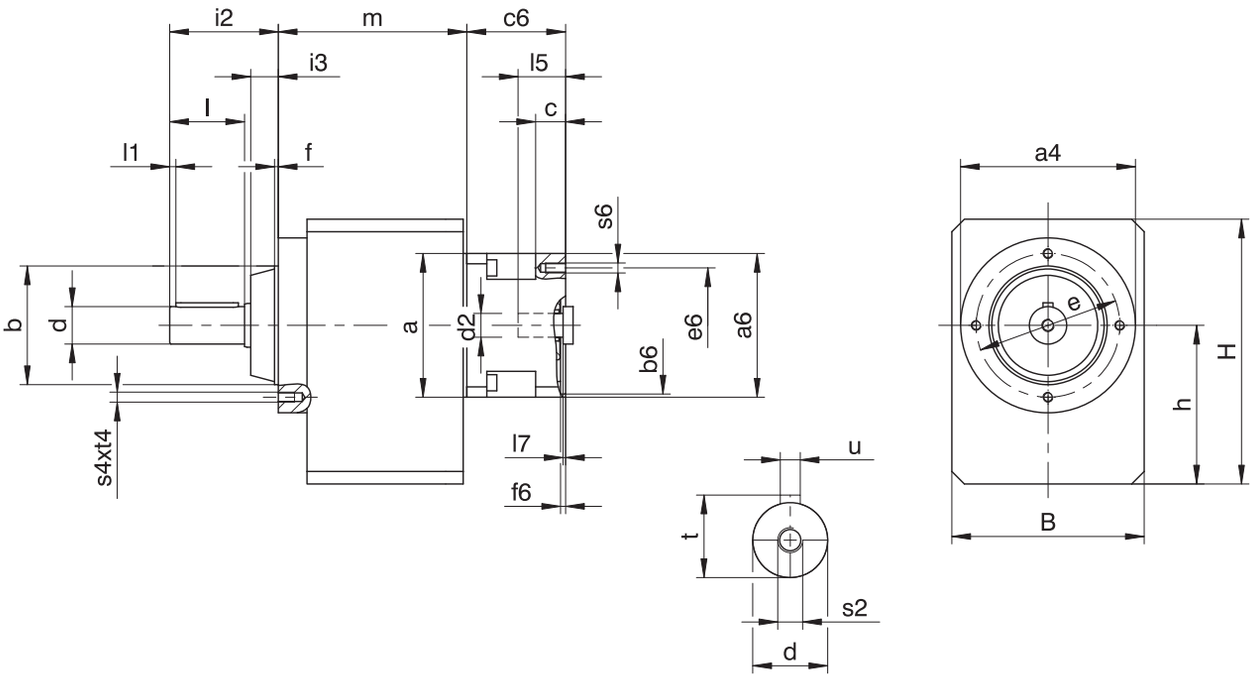

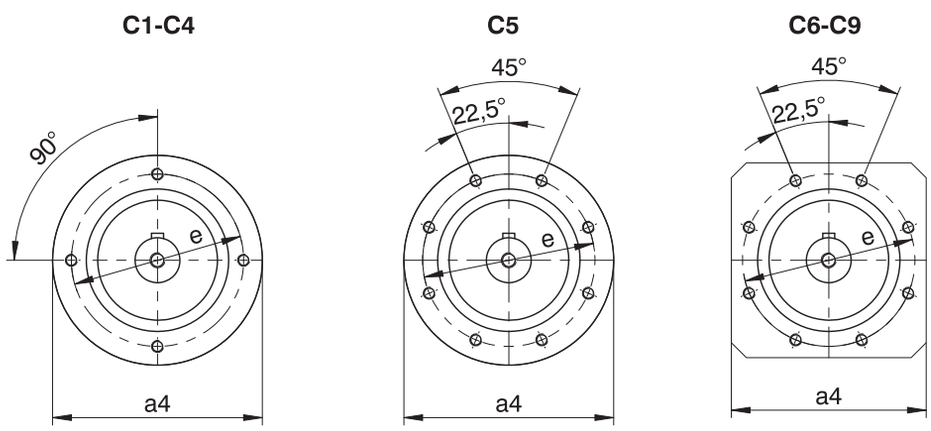

C203, C303, C612, C613: Motor adapter and gear unit are sometimes non-coaxial.

Options: C0 – C5 also available with solid shaft without feather key; on request starting at C6.

Dimensions of gear units

Type	a4	Øb	B	Ød	Øe	f	h	H	i2	i3	l	l1	s2	s4	t	t4	u
C0	∅87	55_{j6}	97	20_{k6}	75	3.0	79.0	141.0	58	14	40	3	M6	M6	22.5	10	A6×6×32
C1	∅120	80_{j6}	130	25_{k6}	100	3.0	100.0	175.0	71	17	50	5	M10	M6	28.0	13	A8×7×40
C2	∅140	95_{j6}	142	30_{k6}	115	3.0	112.0	192.0	87	22	60	5	M10	M8	33.0	13	A8×7×50
C3	∅140	95_{j6}	154	30_{k6}	115	3.0	127.0	212.0	87	22	60	5	M10	M8	33.0	13	A8×7×50
C4	∅160	110_{j6}	178	40_{k6}	130	3.5	142.5	242.5	108	22	80	5	M16	M10	43.0	16	A12×8×70
C5	∅192	130_{j6}	195	40_{k6}	165	3.5	166.0	286.0	109	23	80	5	M16	M10	43.0	16	A12×8×70
C6	□180	140_{j6}	225	50_{k6}	165	5.0	195.0	310.0	136	30	100	5	M16	M10	53.5	16	A14×9×90
C7	□195	155_{j6}	265	60_{m6}	185	8.0	231.0	371.0	164	37	120	5	M20	M12	64.0	19	A18×11×100
C8	□226	185_{j6}	310	70_{m6}	215	5.0	285.0	445.0	185	37	140	5	M20	M12	74.5	19	A20×12×125
C9	□280	230_{j6}	365	90_{m6}	265	5.0	334.0	524.0	220	42	170	5	M24	M16	95.0	26	A25×14×140

Type	ME10		ME20		ME30		ME40		ME50	
	a	m	a	m	a	m	a	m	a	m
C002	□98	96	□115	100	–	–	–	–	–	–
C102	□98	116	□115	120	□145	122	–	–	–	–
C103	∅140	153	–	–	–	–	–	–	–	–
C202	∅140	128	□115	132	□145	134	–	–	–	–
C203	∅140	165	∅160	175	–	–	–	–	–	–
C302	–	–	∅160	151	□145	153	□190	156	–	–
C303	∅140	184	∅160	194	–	–	–	–	–	–
C402	–	–	∅160	178	□145	180	□190	183	–	–
C403	–	–	∅160	221	–	–	–	–	–	–
C502	–	–	∅160	198	∅200	200	□190	203	∅300	217
C503	–	–	∅160	241	–	–	–	–	–	–
C612	–	–	–	–	∅200	197	□190	200	∅300	213
C613	–	–	∅160	239	∅200	259	–	–	–	–
C712	–	–	–	–	∅200	222	∅250	224	∅300	237
C713	–	–	–	–	∅200	283	∅250	295	–	–
C812	–	–	–	–	–	–	∅250	270	∅300	283
C813	–	–	–	–	∅200	329	∅250	341	–	–
C912	–	–	–	–	–	–	–	–	∅300	315
C913	–	–	–	–	–	–	∅250	373	∅300	398

Example dimensions for the motor connection

Type	Øb6	Øe6	Ød2max	l5	□a6	c	c6	f6	l7	s6
C_ME10	95^{H7}	115	19	41	100	21	61.0	4.0	3.0	M8
C_ME20	110^{H7}	130	32	53	120	24	74.0	4.0	3.5	M8
C_ME30	130^{H7}	165	38	62	150	26	86.0	5.5	4.5	M10
C_ME40	180^{H7}	215	48	82	204	35	123.0	5.5	5.5	M12
C_ME50	180^{H7}	215	60	86	230	43	124.5	6.0	5.0	M12

In the table above, you will find example dimensions for the motor connection for the ME motor adapter. **Note that when dimension c is lengthened (depending on the motor used), dimensions c6, l5 and lg are also lengthened accordingly.**

You will find additional motor connection dimensions for the ME motor adapter in our STOBER Configurator at http://configurator.stoeber.de. Here, you can directly download a 3D model of your drive.

7.3.3 Solid shaft design with feather key, F housing design (round flange)

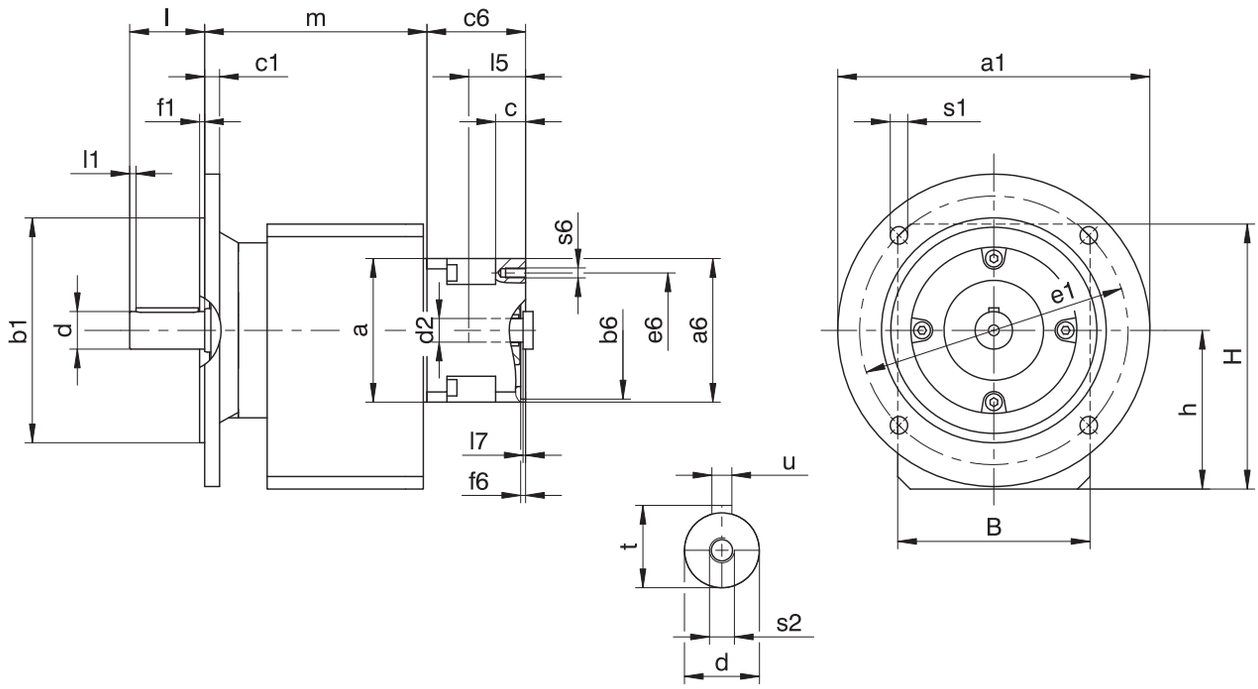

C203, C303, C612, C613: Motor adapter and gear unit are sometimes non-coaxial.

Options: C0 – C5 also available with solid shaft without feather key; on request starting at C6.

Dimensions of gear units

Type	Øa1	Øb1	B	c1	Ød	Øe1	f1	h	H	l	l1	Øs1	s2	t	u
C0	160	110_{j6}	97	10	20_{k6}	130	3.0	79.0	141.0	40	3	9	M6	22.5	A6×6×32
C1	200	130_{j6}	130	12	25_{k6}	165	3.5	100.0	175.0	50	5	11	M10	28.0	A8×7×40
C2	200	130_{j6}	142	12	30_{k6}	165	3.5	112.0	192.0	60	5	11	M10	33.0	A8×7×50
C3	250	180_{j6}	154	12	30_{k6}	215	4.0	127.0	212.0	60	5	14	M10	33.0	A8×7×50
C4	250	180_{j6}	178	14	40_{k6}	215	4.0	142.5	242.5	80	5	14	M16	43.0	A12×8×70
C5	300	230_{j6}	195	16	40_{k6}	265	4.0	166.0	286.0	80	5	14	M16	43.0	A12×8×70
C6	300	230_{j6}	225	17	50_{k6}	265	4.0	195.0	310.0	100	5	14	M16	53.5	A14×9×90
C7	350	250_{h6}	265	18	60_{m6}	300	5.0	231.0	371.0	120	5	18	M20	64.0	A18×11×100
C8	400	300_{h6}	310	20	70_{m6}	350	5.0	285.0	445.0	140	5	18	M20	74.5	A20×12×125
C9	450	350_{h6}	365	23	90_{m6}	400	5.0	334.0	524.0	170	5	18	M24	95.0	A25×14×140

Dimensions of additional round flanges

Type	Øa1	Øb1	c1	Øe1	f1	Øs1
C0	120	80_{j6}	10	100	3.0	7
C0	140	95_{j6}	10	115	3.0	9
C1	140	95_{j6}	8	115	3.5	9
C1	160	110_{j6}	10	130	3.5	9
C2	160	110_{j6}	10	130	3.5	9
C2	250	180_{j6}	12	215	4.0	14
C3	160	110_{j6}	10	130	3.5	9
C3	200	130_{j6}	12	165	3.5	11
C4	200	130_{j6}	14	165	3.5	11
C4	300	230_{j6}	14	265	4.0	14
C5	250	180_{j6}	14	215	4.0	14
C8	350	250_{h6}	18	300	5.0	18
C8	450	350_{h6}	20	400	5.0	18

Type	ME10		ME20		ME30		ME40		ME50	
	a	m	a	m	a	m	a	m	a	m
C002	□98	114	□115	118	–	–	–	–	–	–
C102	□98	137	□115	141	□145	143	–	–	–	–
C103	∅140	174	–	–	–	–	–	–	–	–
C202	∅140	155	□115	159	□145	161	–	–	–	–
C203	∅140	192	∅160	202	–	–	–	–	–	–
C302	–	–	∅160	178	□145	180	□190	183	–	–
C303	∅140	211	∅160	221	–	–	–	–	–	–
C402	–	–	∅160	206	□145	208	□190	211	–	–
C403	–	–	∅160	249	–	–	–	–	–	–
C502	–	–	∅160	227	∅200	229	□190	232	∅300	246
C503	–	–	∅160	270	–	–	–	–	–	–
C612	–	–	–	–	∅200	233	□190	236	∅300	249
C613	–	–	∅160	275	∅200	295	–	–	–	–
C712	–	–	–	–	∅200	266	∅250	268	∅300	281
C713	–	–	–	–	∅200	327	∅250	339	–	–
C812	–	–	–	–	–	–	∅250	315	∅300	328
C813	–	–	–	–	∅200	374	∅250	386	–	–
C912	–	–	–	–	–	–	–	–	∅300	365
C913	–	–	–	–	–	–	∅250	423	∅300	448

Example dimensions for the motor connection

Type	Øb6	Øe6	Ød2max	l5	□a6	c	c6	f6	l7	s6
C_ME10	95^{H7}	115	19	41	100	21	61.0	4.0	3.0	M8
C_ME20	110^{H7}	130	32	53	120	24	74.0	4.0	3.5	M8
C_ME30	130^{H7}	165	38	62	150	26	86.0	5.5	4.5	M10
C_ME40	180^{H7}	215	48	82	204	35	123.0	5.5	5.5	M12
C_ME50	180^{H7}	215	60	86	230	43	124.5	6.0	5.0	M12

In the table above, you will find example dimensions for the motor connection for the ME motor adapter. **Note that when dimension c is lengthened (depending on the motor used), dimensions c6, l5 and lg are also lengthened accordingly.**

You will find additional motor connection dimensions for the ME motor adapter in our STOBER Configurator at http://configurator.stoeber.de. Here, you can directly download a 3D model of your drive.

7.3.4 Solid shaft design with feather key, Q housing design (square flange)

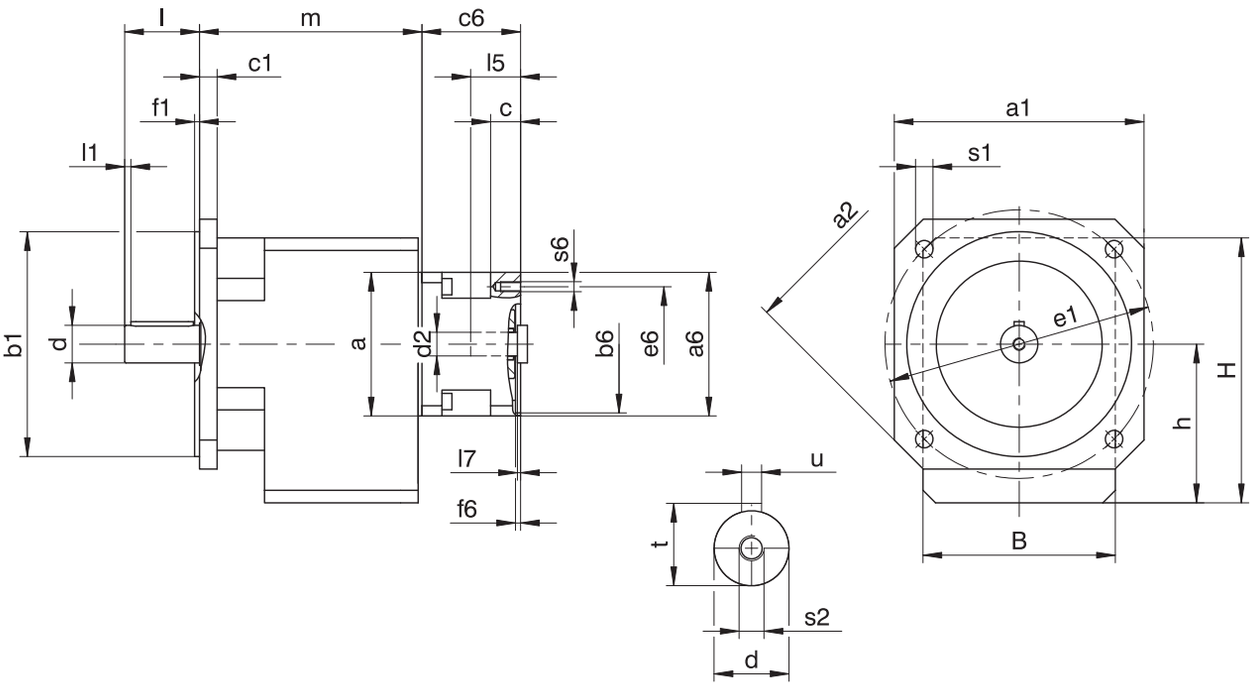

C203, C303: Motor adapter and gear unit are sometimes non-coaxial.

Options: C0 – C5 also available with solid shaft without feather key; on request starting at C6.

Dimensions of gear units

Type	□a1	□a2	Øb1	B	c1	Ød	Øe1	f1	h	H	l	l1	Øs1	s2	t	u
C0	124	160	110_{j6}	97	9	20_{k6}	130	3.0	79.0	141.0	40	3	9	M6	22.5	A6×6×32
C1	145	192	130_{j6}	130	11	25_{k6}	165	3.5	100.0	175.0	50	5	11	M10	28.0	A8×7×40
C2	145	192	130_{j6}	142	11	30_{k6}	165	3.5	112.0	192.0	60	5	11	M10	33.0	A8×7×50
C3	200	250	180_{j6}	154	14	30_{k6}	215	4.0	127.0	212.0	60	5	14	M10	33.0	A8×7×50
C4	200	250	180_{j6}	178	14	40_{k6}	215	4.0	142.5	242.5	80	5	14	M16	43.0	A12×8×70

Type	ME10		ME20		ME30		ME40	
	a	m	a	m	a	m	a	m
C002	□98	114	□115	118	–	–	–	–
C102	□98	137	□115	141	□145	143	–	–
C103	∅140	174	–	–	–	–	–	–
C202	∅140	155	□115	159	□145	161	–	–
C203	∅140	192	∅160	202	–	–	–	–
C302	–	–	∅160	178	□145	180	□190	183
C303	∅140	211	∅160	221	–	–	–	–
C402	–	–	∅160	206	□145	208	□190	211
C403	–	–	∅160	249	–	–	–	–

Example dimensions for the motor connection

Type	Øb6	Øe6	Ød2max	l5	□a6	c	c6	f6	l7	s6
C_ME10	95^{H7}	115	19	41	100	21	61.0	4.0	3.0	M8
C_ME20	110^{H7}	130	32	53	120	24	74.0	4.0	3.5	M8
C_ME30	130^{H7}	165	38	62	150	26	86.0	5.5	4.5	M10
C_ME40	180^{H7}	215	48	82	204	35	123.0	5.5	5.5	M12
C_ME50	180^{H7}	215	60	86	230	43	124.5	6.0	5.0	M12

In the table above, you will find example dimensions for the motor connection for the ME motor adapter. **Note that when dimension c is lengthened (depending on the motor used), dimensions c6, l5 and lg are also lengthened accordingly.**

You will find additional motor connection dimensions for the ME motor adapter in our STOBER Configurator at http://configurator.stoeber.de. Here, you can directly download a 3D model of your drive.

7.3.5 Oil expansion tank

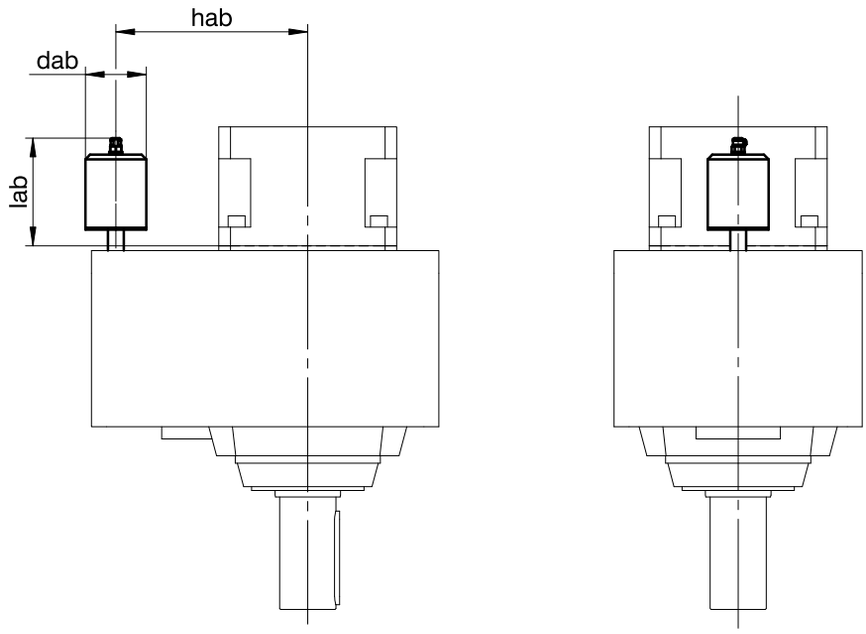

Dimensions

Type	ME30			ME40			ME50		
	dab	hab	lab	dab	hab	lab	dab	hab	lab
C612	65	170	114.5	65	170	112.0	65	214	191.5
C712	73	205	129.5	73	205	129.5	73	205	129.5
C812	–	–	–	73	255	129.5	73	255	129.5
C912	–	–	–	–	–	–	73	305	126.0

More information can be found in the chapter [▸ 7.6.5]

7.4 Type designation

This chapter shows you an explanation of the type designation with the associated options.

Additional ordering information not included in the type designation can be found at the end of the chapter.

Example code

C	2	0	2	N	0280	ME20

Explanation

Code	Designation	Design
C	Type	Helical gear unit
2	Size	2 (example)
0	Generation	Generation 0
1		Generation 1
2	Stages	Two-stage
3		Three-stage
G	Housing	Pitch circle diameter
F		Round flange
Q		Square flange
N		Foot
0280	Transmission ratio (i x 10 rounded)	i = 28.24 (example)
ME20	Motor adapter	ME20 motor adapter (example)
		with EasyAdapt coupling
MQ		Square motor adapter
		with backlash-free plug-in coupling
MB[1]		ServoStop motor adapter with brake

In order to complete the type designation, also specify:

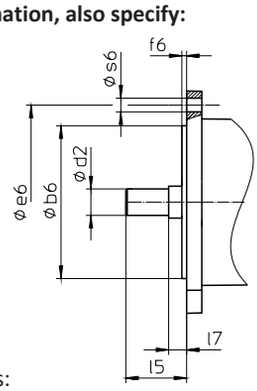

- Motor type or motor dimensions:

  To choose a suitable motor connection, use the STOBER Configurator at http://configurator.stoeber.de and choose your motor or the dimensions of the motor connection.
- For the mounting position, see the chapter [▸ 7.5.7]
- Position of locking screw access, see the chapter [▸ 7.5.9]
- Oil expansion tank (option, recommended for gear units in mounting position EL5), see the chapter [▸ 7.6.5]
- C002, C102, C202, C302, C402, C502, C612, C712, C812, C912: Pinion lock for motor adapter (optional)
- Double seal for ME motor adapter (optional)

[1] You can find more details in the catalog for ServoStop servo gear unit with brake ID 443234.

7.4.1 Nameplate

An example gear unit nameplate is explained in the figure below.

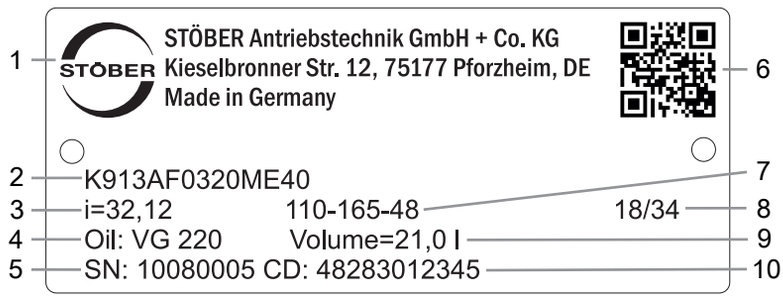

Code	Designation
1	Name of manufacturer
2	Type designation
3	Gear ratio of the gear unit
4	Lubricant specification
5	Serial number of the gear unit
6	QR code (link to product information)
7	Dimensions of the motor adapter (pilot/bolt circle/motor shaft diameter)
8	Date of manufacture (year/calendar week)
9	Lubricant fill volume
10	Customer-specific data

7.4.1.1 Supporting documents

You can view or download supporting documents for the product by reading off the serial number on the nameplate of the product and entering it at the following address online:
https://id.stober.com

Alternatively, you can use a suitable mobile device to scan in the QR code on the nameplate of the product in order to be linked to the supporting documents.

7.5 Product description

7.5.1 Input options

ME motor adapter for attaching synchronous servo motors

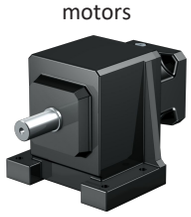

http://www.stoeber.de/en/CME

MB motor adapter with brake for attaching synchronous servo motors

http://www.stoeber.de/en/CMB

MR motor adapter for attaching asynchronous motors

http://www.stoeber.de/en/CMR

EZ synchronous servo motor

http://www.stoeber.de/en/CEZ

LM Lean motor

http://www.stoeber.de/en/CLM

7.5.2 Motor adapter with EasyAdapt coupling (ME)

In this chapter, you will find a description of the EasyAdapt coupling.

Properties:

- Fast and easy motor attachment
- Rugged clamp coupling with expanding function
- Lowest mass moments of inertia for the highest dynamics
- Balanced for smooth running without vibration, even at high speeds
- Large motor shaft diameter range
- Error-free, thanks to exact centering of the motor

Fig. 1: EasyAdapt coupling

7.5.3 Square motor adapter with backlash-free plug-in coupling (MQ)

In this chapter, you will find a description of the backlash-free plug-in coupling (jaw coupling).

Properties:

- Fast and easy motor attachment
- Removal of the motor possible in any position
- With integrated thermal length compensation, compensates for linear expansion of the motor shaft
- Motor shaft decoupled from axial forces
- Balanced for smooth running without vibration, even at high speeds
- Large motor shaft diameter range
- Error-free, thanks to exact centering of the motor

Fig. 2: Backlash-free plug-in coupling

For all technical data and combinations with our gear units, refer to http://configurator.stoeber.de.

7.5.4 Housing design

Pitch circle diameter G	Round flange F
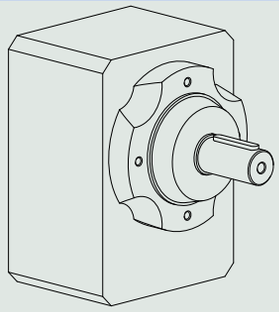	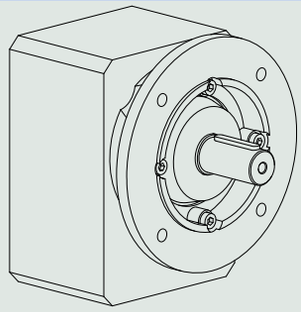

Square flange Q	Foot N
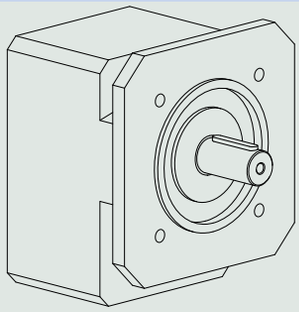	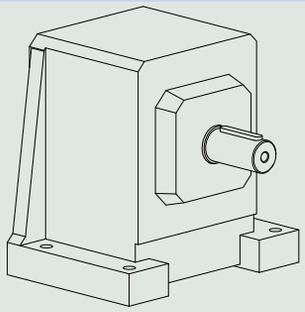

	G	F	Q	N
C0	✓	✓	✓	✓
C1	✓	✓	✓	✓
C2	✓	✓	✓	✓
C3	✓	✓	✓	✓
C4	✓	✓	✓	✓
C5	✓	✓	–	✓
C6	✓	✓	–	✓
C7	✓	✓	–	✓
C8	✓	✓	–	✓
C9	✓	✓	–	✓

7.5.5 Shaft design

Gear units in sizes C0 – C9 come standard with a solid shaft with feather key.

Gear units in sizes C0 – C5 can be ordered with the option of a solid shaft without feather key. Only upon request starting at size C6.

7.5.6 Installation conditions

Fastening the gear units on the machine side using the pitch circle diameter

The specified torques and forces only apply when gear units are fastened on the machine side using screws of strength class 10.9. In addition, the gear housings must be adjusted at the pilot. The machine-side fit must be H7.

7.5.7 Mounting positions

The following table shows the standard mounting positions.

The numbers identify the gear unit sides. The mounting position is defined by the gear side facing downwards.

EL1 IMB3, IMB5, IMB14, IMB34, IMB35	EL2 IMB8	EL3 IMB7
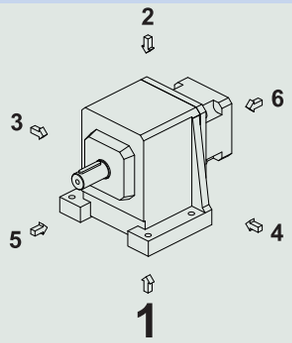	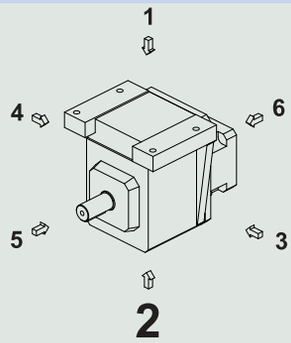	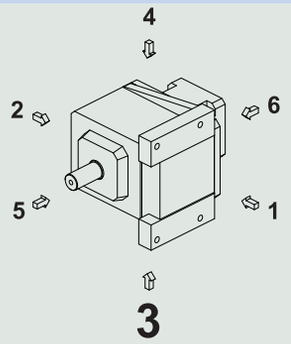
EL4 **IMB6**	**EL5** **IMV1, IMV5, IMV18**	**EL6** **IMV3, IMV6, IMV19**
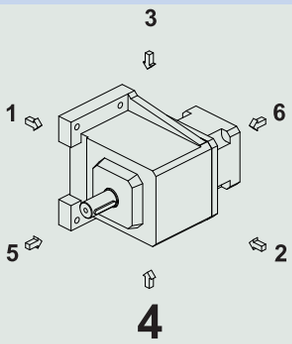	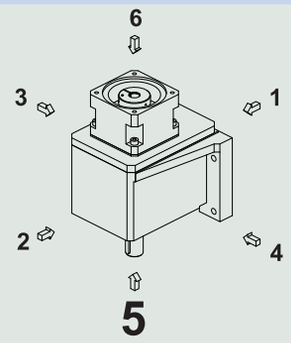	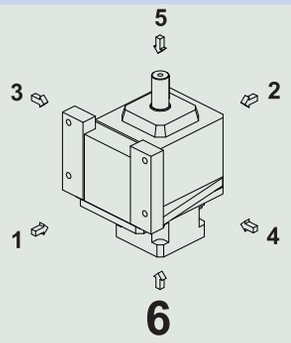

Since the lubricant filling volume of the gear unit depends on the mounting position, the mounting position must be specified when ordering.

7.5.8 Lubricants

STOBER fills the gear units with the amount and type of lubricant specified on the nameplate. The filling volume and the structure of the gear units depend on the mounting position.

Only install the gear units in the intended mounting position! Reposition the gear units only after consulting STOBER. Otherwise, STOBER assumes no liability for the gear units.

You will receive lubricants for use in the food industry upon request.

7.5.9 Position of locking screw access

Mounting position EL1 Locking screw in 270° position (standard)	**Mounting position EL4** Locking screw in 270° position (standard)
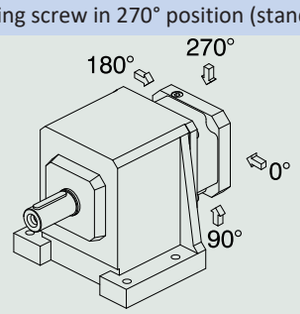	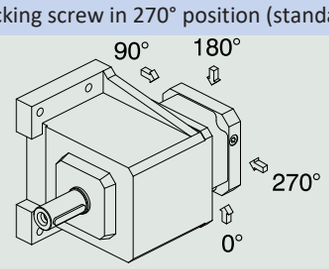

Indicate variations for your gear unit in the order.

Note that the access hole for the locking screw also rotates when the gear unit is rotated to another mounting position.

7.5.10 Other product features

Feature	Value
Max. permitted gear unit temperature (on the surface of the gear unit)	≤ 80 °C
Paint	Black RAL 9005
Explosion-proof design in accordance with (ATEX) Directive 2014/34/EU (optional)	Available, see Document ID 441677_en
Efficiency: η_{get} two-stage η_{get} three-stage	 97% 96%
Protection class: [2]	IP65

7.5.11 Maintenance

The instructions for maintenance can be found in the operating manual, ID 443027_en, at http://www.stoeber.de/en/downloads/. Enter the ID of the documentation in the Search... field.

Ventilation

Air release valves are fitted as a standard feature and independently of installation position for gear unit sizes C6 to C9.

For the position and dimensions of the air release valve, refer to the 3D model.

Download the 3D model at http://configurator.stoeber.de.

7.5.12 Direction of rotation

C002 – C912	C103 – C913
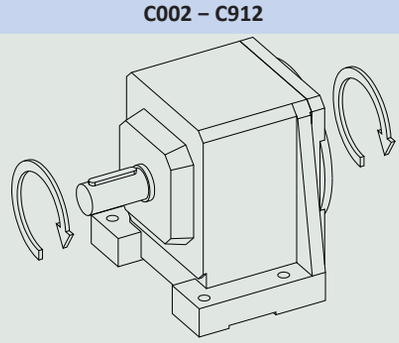	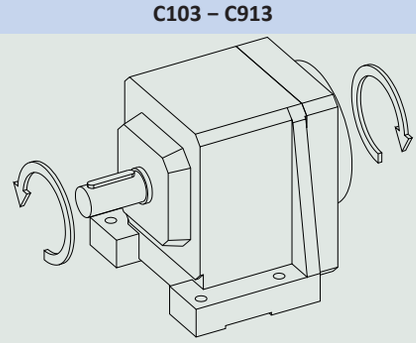
The input and output rotate in the same direction.	The input and output rotate in opposite directions.

The pictures show mounting position EL1.

7.6 Project configuration

Project your drives using our SERVOsoft designing software. Download SERVOsoft for free at https://www.stoeber.de/en/ServoSoft.

Observe the limit conditions in this chapter to ensure a safe design for your drives.

An explanation of the formula symbols can be found in the chapter [▸ 18.1].

[2] Observe the protection class of all the components.

7.6.1 Drive selection

The formula symbols for values actually present in the application are marked with *.

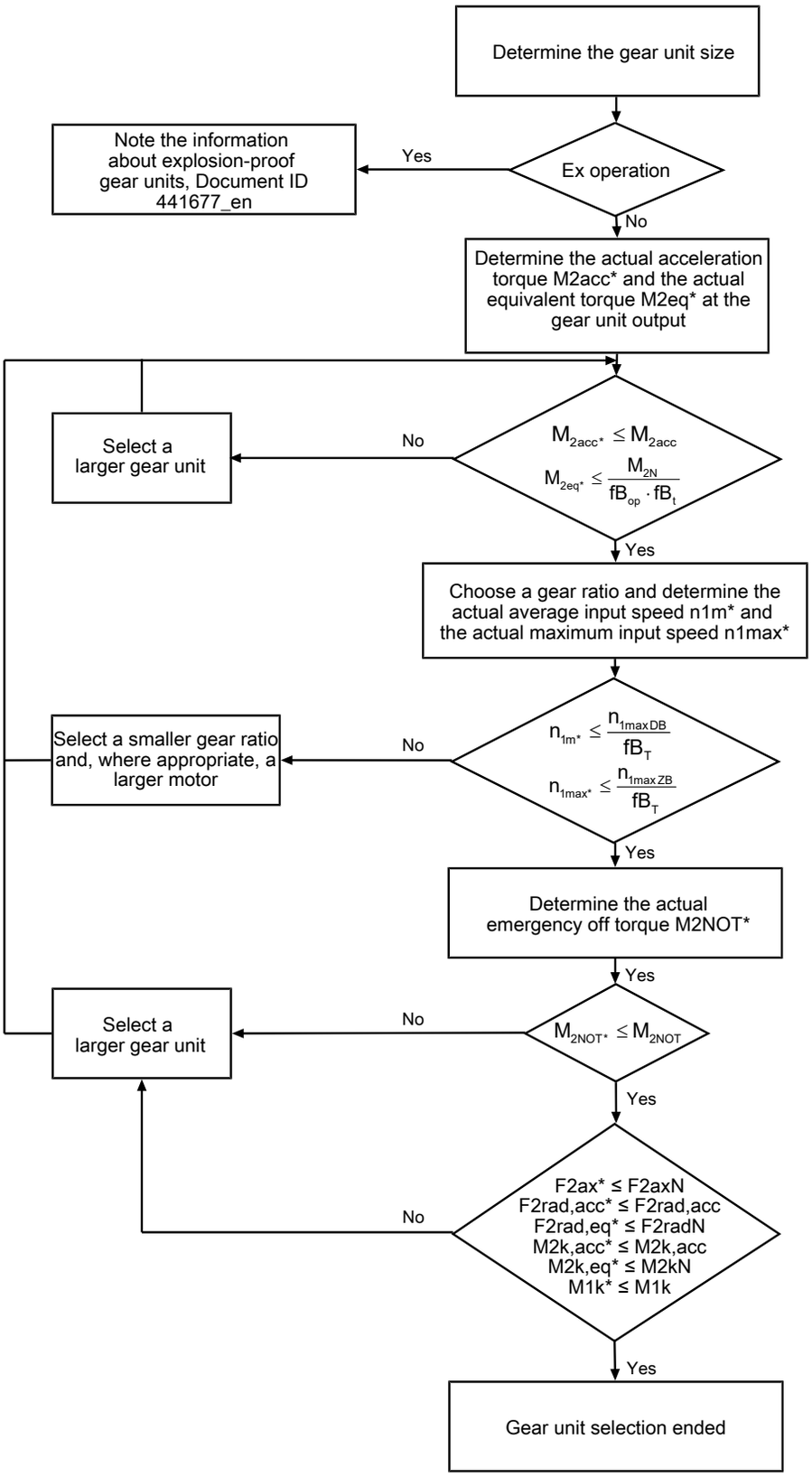

Calculate the forces and tilting torques in the chapter Permitted shaft loads.

The values for i, n_{1maxDB}, n_{1maxZB}, M_{2acc}, M_{2NOT} and M_{2N} can be found in the selection tables.

The values for fB_T, fB_{op} and fB_t can be found in the corresponding tables in this chapter.

Example of cyclic operation

The following calculations are based on a representation of the power taken from the output based in accordance with the following example:

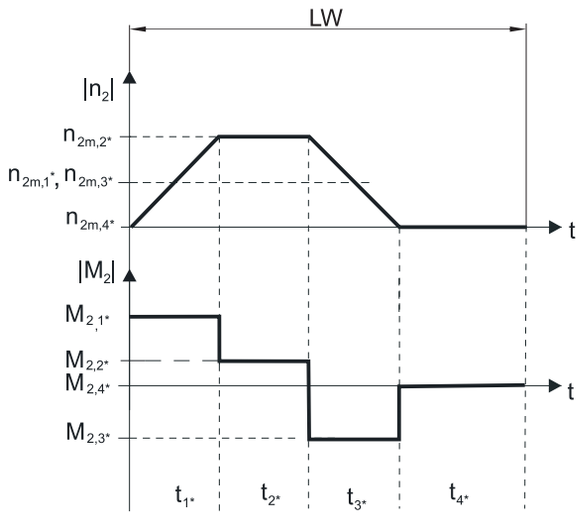

Calculation of the actual maximum acceleration torque

$$M_{2acc*} = J_{tot} \cdot \frac{\Delta n_2}{9.55 \cdot \Delta t} + M_{L*}$$

Calculation of the actual average input speed

$$n_{1m*} = n_{2m*} \cdot i$$

$$n_{2m*} = \frac{|n_{2m,1*}| \cdot t_{1*} + \ldots + |n_{2m,n*}| \cdot t_{n*}}{t_{1*} + \ldots + t_{n*}}$$

If $t_{1*} + \ldots + t_{3*} \geq 6$ min, calculate n_{2m*} without the rest phase t_{4*}.

The values for the ratio i can be found in the selection tables.

Calculation of the actual emergency-off torque

$$M_{2NOT*} = J_{tot} \cdot \frac{\Delta n_2}{9.55 \cdot \Delta t} + M_{L*}$$

Calculation of the actual equivalent torque

$$M_{2eq*} = \sqrt[3]{\frac{|n_{2m,1*}| \cdot t_{1*} \cdot |M_{2,1*}{}^3| + \ldots + |n_{2m,n*}| \cdot t_{n*} \cdot |M_{2,n*}{}^3|}{|n_{2m,1*}| \cdot t_{1*} + \ldots + |n_{2m,n*}| \cdot t_{n*}}}$$

Operating factors

Operating mode	fB_{op}
Uniform continuous operation	1.00
Cyclic operation	1.25
Reversing load cyclic operation	1.40

Run time	fB_t
Daily runtime ≤ 8 h	1.00
Daily runtime ≤ 16 h	1.15
Daily runtime ≤ 24 h	1.20

Temperature		fB_T
Motor cooling	**Surrounding temperature**	
Motor with forced ventilation	≤ 20 °C	0.9
	≤ 30 °C	1.0
	≤ 40 °C	1.15
Motor with convection cooling	≤ 20 °C	1.0
	≤ 30 °C	1.1
	≤ 40 °C	1.25

Notes

- The maximum permitted gear unit temperature of ≤ 80 °C must not be exceeded. Doing so may result in damage to the gear unit.

7.6.2 Permitted shaft loads for the output shaft

The values specified in the tables apply to the permitted shaft loads:

- For shaft dimensions in accordance with the catalog
- For output speeds n_{2m*} ≤ 20 rpm ($F_{2axN} = F_{2ax20}$; $F_{2radN} = F_{2rad20}$; $M_{2kN} = M_{2k20}$)
- Only if radial forces on the gear unit are stabilized by its pilots for the pitch circle diameter and flange housing design

Permitted shaft loads

Type	z_2 [mm]	F_{2ax20} [N]	F_{2rad20} [N]	$F_{2rad,acc}$ [N]	M_{2k20} [Nm]	$M_{2k,acc}$ [Nm]
C0	20.0	500	1900	1900	80	80
C1	30.0	850	3400	3400	190	190
C2	30.0	1050	4200	4200	260	260
C3	30.0	1400	5650	5650	350	350
C4	35.0	2400	9700	9700	750	750
C5	42.0	3000	11000	11000	900	900
C6	40.0	4000	16000	16000	1500	1500
C7	45.0	5500	22000	22000	2400	2400
C8	50.0	7500	30000	30000	3700	3700
C9	55.0	9500	37000	37000	5200	5200

For other output speeds, download diagrams at http://configurator.stoeber.de.

The following applies to output speeds n_{2m*} > 20 rpm:

$$F_{2axN} = \frac{F_{2ax20}}{\sqrt[3]{\frac{n_{2m*}}{20\ \text{rpm}}}} \qquad F_{2radN} = \frac{F_{2rad20}}{\sqrt[3]{\frac{n_{2m*}}{20\ \text{rpm}}}} \qquad M_{2kN} = \frac{M_{2k20}}{\sqrt[3]{\frac{n_{2m*}}{20\ \text{rpm}}}}$$

The values for F_{2ax20}, F_{2rad20} and M_{2k20} can be found in the table "Permitted shaft loads" in this chapter.

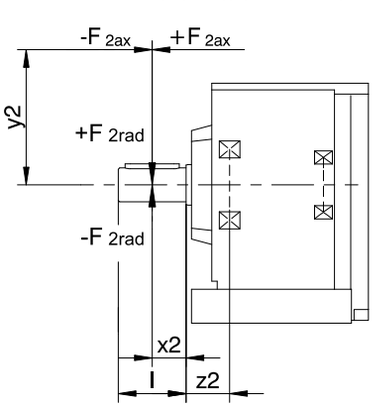

Fig. 3: Force application points

The specified values for F_{2rad20} are based on application of force at the middle of the output shaft: $x_2 = l/2$.

Shaft dimensions can be found in the "Dimensional drawings" chapter.

The following applies to other force application points:

$$M_{2k*} = \frac{2 \cdot F_{2ax*} \cdot y_2 + F_{2rad*} \cdot (x_2 + z_2)}{1000} \leq M_{2kN}$$

$$F_{2rad*} \leq F_{2radN}$$

$$F_{2ax*} \leq F_{2axN}$$

For applications with multiple axial and/or radial forces, you must add the forces as vectors.

In the event of EMERGENCY OFF operation (max. 1000 load changes), you can multiply the permitted forces and torques for F_{2ax20}, F_{2rad20} and M_{2k20} by a factor of two.

7.6.3 Permitted breakdown torques at the gear unit input

For a horizontal mounting position of the motor, verify that the permitted breakdown torque at the gear unit input is not exceeded before installation on a STOBER gear unit. You can find information for how to do that in this chapter.

Calculate the actual breakdown torque as follows:

$M_{1k*} = F_{1k*} \bullet l_{sp} \leq M_{1k}$

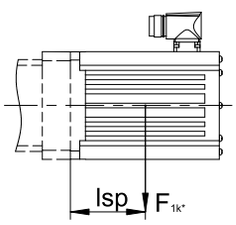

Type	M_{1k} [Nm]
ME10	25
ME20	60
ME30	125
ME40	250
ME50	600

7.6.4 Radial shaft seal rings

Leak-proofness

Our gear units are equipped with high-quality radial shaft seal rings and checked for leaks. However, a leak cannot be fully ruled out over the length of use of a gear unit. If you use a gear unit with goods incompatible with the lubricant, you must take measures to prevent direct contact with the gear unit lubricant in case of a leak.

7.6.5 Oil expansion tank

The gear units have a higher fill level in mounting position EL5. The oil expansion tank prevents oil from escaping out of the gear unit.

Notes

- We recommend using an oil expansion tank in mounting position EL5 (additional cost) for fast running gear units with an input speed n_1 > 1750 rpm and gear ratios i < 20.
- The oil expansion tank can only be used with certain sizes; see the chapter [▶ 7.3.5]

7.7 Additional documentation

Additional documentation related to the product can be found at
http://www.stoeber.de/en/downloads/

Enter the ID of the documentation in the Search... field.

Documentation	ID
Operating manual for C/F/K/S gear units and gear motors	443027_en
Operating manual for explosion-proof C/F/K/S gear units	443028_en
Information explosion-proof gear units	441677_en

8 F offset helical gear units

Table of contents

8.1 Overview ... 140

8.2 Selection tables ... 141

8.3 Dimensional drawings ... 145

8.3.1 A shaft design (hollow shaft), G housing design (pitch circle diameter) ... 146

8.3.2 A shaft design (hollow shaft), GN housing design (pitch circle diameter + side fastening) ... 148

8.3.3 A shaft design (hollow shaft), F housing design (round flange) ... 150

8.3.4 A shaft design (hollow shaft), Q housing design (square flange) ... 152

8.3.5 V shaft design (solid shaft), F housing design (round flange) ... 154

8.3.6 V shaft design (solid shaft), Q housing design (square flange) ... 155

8.3.7 S shaft design (hollow shaft with shrink ring), G housing design (pitch circle diameter) ... 156

8.3.8 S shaft design (hollow shaft with shrink ring), GN housing design (pitch circle diameter + side fastening) ... 158

8.3.9 S shaft design (hollow shaft with shrink ring), F housing design (round flange) ... 160

8.3.10 S shaft design (hollow shaft with shrink ring), Q housing design (square flange) ... 162

8.4 Type designation ... 164

8.4.1 Nameplate ... 165

8.5 Product description ... 165

8.5.1 Input options ... 165

8.5.2 Motor adapter with EasyAdapt coupling (ME) ... 166

8.5.3 Square motor adapter with backlash-free plug-in coupling (MQ) ... 166

8.5.4 Housing design ... 167

8.5.5 Combinatorial shaft/housing design ... 167

8.5.6 Installation conditions ... 167

8.5.7 Mounting positions ... 168

8.5.8 Lubricants ... 168

8.5.9 Position of locking screw access ... 169

8.5.10 Other product features ... 169

8.5.11 Direction of rotation ... 169

8.6 Project configuration ... 169

8.6.1 Drive selection ... 170

8.6.2 Permitted shaft loads for the output shaft ... 172

8.6.3 Permitted breakdown torques at the gear unit input ... 174

8.6.4 Radial shaft seal rings ... 174

8.7 Additional documentation ... 174

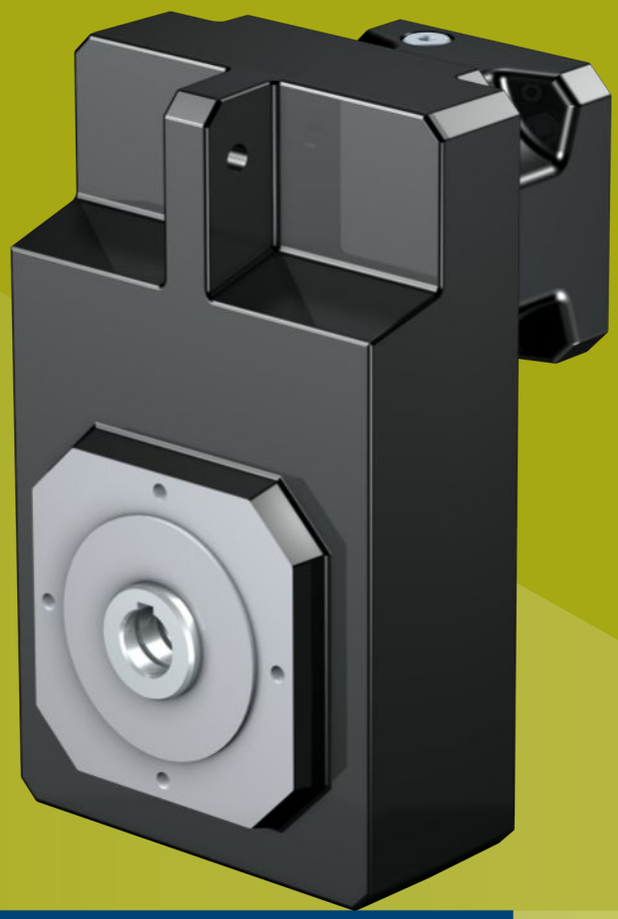

8 Offset helical gear units F

8.1 Overview

Offset helical gear units with large axial distances

Features

Power density	★☆☆☆☆
Backlash	★★★☆☆
Price category	€
Shaft load	★★★☆☆
Smooth operation	★★★☆☆
Torsional stiffness	★★☆☆☆
Mass moment of inertia	★★★★☆
Helical gearing	✓
Maintenance-free	✓
FKM seal ring at the input	✓
Large axial distances, suitable for confined situations	✓
Easy and reliable attachment to any synchronous servo motor	✓

Key ★☆☆☆☆ good | ★★★★★ excellent
€ Economy | €€€€€ Premium

Technical data

i	4.3 – 552
M_{2acc}	53 – 1100 Nm
$\Delta\phi_2$	5 – 11 arcmin
η_{get}	96 – 97 %

8.2 Selection tables

The technical data specified in the selection tables applies to:

- Installation altitudes up to 1000 m above sea level
- Surrounding temperatures from 0 °C to 40 °C
- Without consideration for thermal limiting performance

You can find the mass moment of inertia J_1 for smaller motor shaft diameters and all other technical data at http://configurator.stoeber.de.

An explanation of the formula symbols can be found in the chapter [▸ 18.1].

i	i_{exakt}	Type	n_{1MAXDB} EL1,2,3,4 [rpm]	n_{1MAXDB} EL5,6 [rpm]	n_{1MAXZB} [rpm]	J_1 [kgcm²]	m [kg]	d_{MW} [mm]	$\Delta\varphi_2$ [arcmin]	$\Delta\varphi_{2redII}$ [arcmin]	C_2 [Nm/arcmin]	M_{2N} [Nm]	M_{2acc} [Nm]	M_{2NOT} [Nm]
F102 ($M_{2acc,max}$ = 120 Nm)														
4.308	56/13	F102_0043 ME10	3500	3000	6000	2.1	13	≤19	11.0	8.0	6.2	69	100	125
4.308	56/13	F102_0043 ME20	3500	3000	6000	4.0	14	≤24	11.0	8.0	6.4	69	100	125
6.462	84/13	F102_0065 ME10	3500	3000	6000	1.4	13	≤19	11.0	8.0	6.4	79	105	188
6.462	84/13	F102_0065 ME20	3500	3000	6000	3.3	14	≤24	11.0	8.0	6.5	79	105	188
7.156	322/45	F102_0072 ME10	3700	3600	6000	1.3	13	≤19	11.0	8.0	6.4	81	105	200
7.156	322/45	F102_0072 ME20	3700	3600	6000	3.2	14	≤24	11.0	8.0	6.5	81	105	200
8.948	1029/115	F102_0089 ME10	3700	3600	6000	1.1	13	≤19	11.0	8.0	6.5	88	105	200
8.948	1029/115	F102_0089 ME20	3700	3600	6000	3.0	14	≤24	11.0	8.0	6.5	88	105	200
10.92	273/25	F102_0110 ME10	4000	4000	6500	0.94	13	≤19	11.0	8.0	6.5	94	105	200
10.92	273/25	F102_0110 ME20	3700	3700	6000	2.8	14	≤24	11.0	8.0	6.5	94	105	200
13.59	231/17	F102_0135 ME10	4000	4000	6500	0.85	13	≤19	11.0	8.0	6.5	101	105	200
13.59	231/17	F102_0135 ME20	3700	3700	6000	2.7	14	≤24	11.0	8.0	6.5	101	105	200
18.46	1495/81	F102_0185 ME10	3700	3600	6000	0.96	13	≤19	11.0	6.0	7.7	111	120	240
18.46	1495/81	F102_0185 ME20	3700	3600	6000	2.9	14	≤24	11.0	6.0	7.7	111	120	240
23.08	3185/138	F102_0230 ME10	3700	3600	6000	0.87	13	≤19	11.0	6.0	7.7	120	120	240
23.08	3185/138	F102_0230 ME20	3700	3600	6000	2.8	14	≤24	11.0	6.0	7.7	120	120	240
28.17	169/6	F102_0280 ME10	4000	4000	6500	0.81	13	≤19	11.0	6.0	7.7	120	120	240
28.17	169/6	F102_0280 ME20	3700	3700	6000	2.7	14	≤24	11.0	6.0	7.7	120	120	240
35.05	3575/102	F102_0350 ME10	4000	4000	6500	0.77	13	≤19	11.0	6.0	7.7	120	120	240
35.05	3575/102	F102_0350 ME20	3700	3700	6000	2.7	14	≤24	11.0	6.0	7.7	120	120	240
46.43	325/7	F102_0460 ME10	4000	4000	7000	0.72	13	≤19	11.0	6.0	7.7	120	120	240
46.43	325/7	F102_0460 ME20	3700	3700	6000	2.6	14	≤24	11.0	6.0	7.7	120	120	240
55.97	2015/36	F102_0560 ME10	4000	4000	7000	0.70	13	≤19	11.0	6.0	7.7	120	120	240
55.97	2015/36	F102_0560 ME20	3700	3700	6000	2.6	14	≤24	11.0	6.0	7.7	120	120	240
70.06	1261/18	F102_0700 ME10	4000	4000	7000	0.68	13	≤19	11.0	6.0	7.7	120	120	240
70.06	1261/18	F102_0700 ME20	3700	3700	6000	2.6	14	≤24	11.0	6.0	7.7	120	120	240
93.63	7865/84	F102_0940 ME10	4000	4000	7000	0.63	13	≤19	11.0	6.0	7.7	120	120	240
111.9	2015/18	F102_1120 ME10	4000	4000	7000	0.62	13	≤19	11.0	6.0	7.7	120	120	240
139.8	559/4	F102_1400 ME10	4000	4000	7000	0.62	13	≤19	11.0	6.0	7.7	120	120	240
F202 ($M_{2acc,max}$ = 270 Nm)														
4.680	2616/559	F202_0047 ME10	3100	2600	5000	4.7	21	≤19	11.0	8.0	14	109	109	136
4.680	2616/559	F202_0047 ME20	3100	2600	5000	8.1	22	≤32	11.0	8.0	15	140	210	340
4.680	2616/559	F202_0047 ME30	3100	2600	5000	13	24	≤38	11.0	8.0	15	140	210	340
5.552	5341/962	F202_0056 ME20	3100	2600	5000	7.1	22	≤32	11.0	8.0	15	149	210	400
5.552	5341/962	F202_0056 ME30	3100	2600	5000	12	24	≤38	11.0	8.0	15	149	210	400
7.167	5777/806	F202_0072 ME10	3600	3100	6000	2.6	21	≤19	11.0	8.0	15	145	167	209
7.167	5777/806	F202_0072 ME20	3600	3100	6000	6.0	22	≤32	11.0	8.0	15	162	210	400
7.167	5777/806	F202_0072 ME30	3500	3100	5000	11	24	≤38	11.0	8.0	15	162	210	400
9.006	3161/351	F202_0090 ME10	3600	3100	6000	1.9	21	≤19	11.0	8.0	15	160	210	262
9.006	3161/351	F202_0090 ME20	3600	3100	6000	5.3	22	≤32	11.0	8.0	15	175	210	400
9.006	3161/351	F202_0090 ME30	3500	3100	5000	11	24	≤38	11.0	8.0	15	175	210	400
10.80	7303/676	F202_0110 ME10	3800	3500	6000	1.6	21	≤19	11.0	8.0	15	166	210	314
10.80	7303/676	F202_0110 ME20	3700	3500	6000	5.0	22	≤32	11.0	8.0	15	185	210	400
10.80	7303/676	F202_0110 ME30	3500	3500	5000	10	24	≤38	11.0	8.0	16	185	210	400
13.63	109/8	F202_0135 ME10	3800	3500	6000	1.3	21	≤19	11.0	8.0	15	180	210	397
13.63	109/8	F202_0135 ME20	3700	3500	6000	4.7	22	≤32	11.0	8.0	16	200	210	400
13.63	109/8	F202_0135 ME30	3500	3500	5000	10	24	≤38	11.0	8.0	16	200	210	400
18.65	6360/341	F202_0185 ME10	3600	3100	6000	1.6	21	≤19	11.0	6.0	18	222	270	480
18.65	6360/341	F202_0185 ME20	3600	3100	6000	5.0	22	≤32	11.0	6.0	18	222	270	480
18.65	6360/341	F202_0185 ME30	3500	3100	5000	10	24	≤38	11.0	6.0	18	222	270	480
23.43	2320/99	F202_0230 ME10	3600	3100	6000	1.3	21	≤19	11.0	6.0	18	240	270	480
23.43	2320/99	F202_0230 ME20	3600	3100	6000	4.7	22	≤32	11.0	6.0	18	240	270	480

i	i_{exakt}	Type	n_{1MAXDB} EL1,2,3,4 [rpm]	n_{1MAXDB} EL5,6 [rpm]	n_{1MAXZB} [rpm]	J_1 [kgcm²]	m [kg]	d_{MW} [mm]	$\Delta\varphi_2$ [arcmin]	$\Delta\varphi_{2redII}$ [arcmin]	C_2 [Nm/arcmin]	M_{2N} [Nm]	M_{2acc} [Nm]	M_{2NOT} [Nm]
F202 ($M_{2acc,max}$ = 270 Nm)														
23.43	2320/99	F202_0230 ME30	3500	3100	5000	10	24	≤38	11.0	6.0	18	240	270	480
28.11	4020/143	F202_0280 ME10	3800	3500	6000	1.1	21	≤19	11.0	6.0	18	240	270	480
28.11	4020/143	F202_0280 ME20	3700	3500	6000	4.5	22	≤32	11.0	6.0	18	240	270	480
28.11	4020/143	F202_0280 ME30	3500	3500	5000	9.9	24	≤38	11.0	6.0	18	240	270	480
35.46	390/11	F202_0350 ME10	3800	3500	6000	0.99	21	≤19	11.0	6.0	18	240	270	480
35.46	390/11	F202_0350 ME20	3700	3500	6000	4.4	22	≤32	11.0	6.0	18	240	270	480
35.46	390/11	F202_0350 ME30	3500	3500	5000	9.7	24	≤38	11.0	6.0	18	240	270	480
47.05	1035/22	F202_0470 ME10	4000	3900	6500	0.87	21	≤19	11.0	6.0	18	240	270	480
47.05	1035/22	F202_0470 ME20	3700	3700	6000	4.3	22	≤32	11.0	6.0	18	240	270	480
47.05	1035/22	F202_0470 ME30	3500	3500	5000	9.6	24	≤38	11.0	6.0	18	240	270	480
56.73	624/11	F202_0570 ME10	4000	3900	6500	0.81	21	≤19	11.0	6.0	18	240	270	480
56.73	624/11	F202_0570 ME20	3700	3700	6000	2.7	22	≤24	11.0	6.0	18	240	270	480
70.13	5400/77	F202_0700 ME10	4000	3900	6500	0.75	21	≤19	11.0	6.0	18	240	270	480
70.13	5400/77	F202_0700 ME20	3700	3700	6000	2.7	22	≤24	11.0	6.0	18	240	270	480
93.82	1032/11	F202_0940 ME10	4000	3900	6500	0.71	21	≤19	11.0	6.0	18	240	270	480
93.82	1032/11	F202_0940 ME20	3700	3700	6000	2.6	22	≤24	11.0	6.0	18	240	270	480
112.7	1240/11	F202_1130 ME10	4000	3900	6500	0.66	21	≤19	11.0	6.0	18	240	270	480
140.9	1550/11	F202_1410 ME10	4000	3900	6500	0.64	21	≤19	11.0	6.0	18	240	270	480
F203 ($M_{2acc,max}$ = 270 Nm)														
184.3	16215/88	F203_1840 ME10	4000	3900	6500	0.66	24	≤19	11.0	7.0	18	240	270	480
222.2	2444/11	F203_2220 ME10	4000	3900	6500	0.66	24	≤19	11.0	7.0	18	240	270	480
274.7	21150/77	F203_2750 ME10	4000	3900	6500	0.66	24	≤19	11.0	7.0	18	240	270	480
367.5	4042/11	F203_3670 ME10	4000	3900	6500	0.65	24	≤19	11.0	7.0	18	240	270	480
441.5	14570/33	F203_4420 ME10	4000	3900	6500	0.65	24	≤19	11.0	7.0	18	240	270	480
551.9	36425/66	F203_5520 ME10	4000	3900	6500	0.65	24	≤19	11.0	7.0	18	240	270	480
F302 ($M_{2acc,max}$ = 450 Nm)														
4.644	4992/1075	F302_0046 ME20	3000	2600	4500	12	29	≤32	11.0	8.0	20	233	270	338
4.644	4992/1075	F302_0046 ME30	3000	2600	4500	18	31	≤38	11.0	8.0	20	233	349	650
5.720	143/25	F302_0057 ME20	3000	2600	4500	9.7	29	≤32	11.0	8.0	20	250	333	416
5.720	143/25	F302_0057 ME30	3000	2600	4500	15	31	≤38	11.0	8.0	20	250	333	416
7.172	208/29	F302_0072 ME20	3500	3100	5000	7.9	29	≤32	11.0	8.0	20	269	350	522
7.172	208/29	F302_0072 ME30	3500	3100	5000	13	31	≤38	11.0	8.0	20	269	350	522
8.986	5616/625	F302_0090 ME10	3500	3100	5000	3.3	28	≤19	11.0	8.0	20	180	209	262
8.986	5616/625	F302_0090 ME20	3500	3100	5000	6.7	29	≤32	11.0	8.0	20	290	350	650
8.986	5616/625	F302_0090 ME30	3500	3100	5000	12	31	≤38	11.0	8.0	20	290	350	650
10.79	1456/135	F302_0110 ME10	3700	3500	5500	2.5	28	≤19	11.0	8.0	20	187	251	314
10.79	1456/135	F302_0110 ME20	3700	3500	5500	5.9	29	≤32	11.0	8.0	20	308	350	650
10.79	1456/135	F302_0110 ME30	3500	3500	5000	11	31	≤38	11.0	8.0	20	308	350	650
13.38	7696/575	F302_0135 ME10	3700	3500	5500	1.9	28	≤19	11.0	8.0	20	199	312	390
13.38	7696/575	F302_0135 ME20	3700	3500	5500	5.3	29	≤32	11.0	8.0	20	331	350	650
13.38	7696/575	F302_0135 ME30	3500	3500	5000	11	31	≤38	11.0	8.0	20	331	350	650
18.77	4900/261	F302_0190 ME20	3500	3100	5000	5.9	29	≤32	11.0	6.0	22	371	450	800
18.77	4900/261	F302_0190 ME30	3500	3100	5000	11	31	≤38	11.0	6.0	22	371	450	800
23.52	588/25	F302_0240 ME10	3500	3100	5000	2.0	28	≤19	11.0	6.0	22	400	450	685
23.52	588/25	F302_0240 ME20	3500	3100	5000	5.4	29	≤32	11.0	6.0	22	400	450	800
23.52	588/25	F302_0240 ME30	3500	3100	5000	11	31	≤38	11.0	6.0	22	400	450	800
28.23	6860/243	F302_0280 ME10	3700	3500	5500	1.7	28	≤19	11.0	6.0	22	400	450	800
28.23	6860/243	F302_0280 ME20	3700	3500	5500	5.1	29	≤32	11.0	6.0	22	400	450	800
28.23	6860/243	F302_0280 ME30	3500	3500	5000	10	31	≤38	11.0	6.0	22	400	450	800
35.03	7252/207	F302_0350 ME10	3700	3500	5500	1.4	28	≤19	11.0	6.0	22	400	450	800
35.03	7252/207	F302_0350 ME20	3700	3500	5500	4.8	29	≤32	11.0	6.0	22	400	450	800
35.03	7252/207	F302_0350 ME30	3500	3500	5000	10	31	≤38	11.0	6.0	22	400	450	800
47.19	1274/27	F302_0470 ME10	4000	3900	6500	1.1	28	≤19	11.0	6.0	22	400	450	800
47.19	1274/27	F302_0470 ME20	3700	3700	6000	4.5	29	≤32	11.0	6.0	22	400	450	800
47.19	1274/27	F302_0470 ME30	3500	3500	5000	9.8	31	≤38	11.0	6.0	22	400	450	800
56.49	4067/72	F302_0560 ME10	4000	3900	6500	0.99	28	≤19	11.0	6.0	22	400	450	800
56.49	4067/72	F302_0560 ME20	3700	3700	6000	4.4	29	≤32	11.0	6.0	22	400	450	800
56.49	4067/72	F302_0560 ME30	3500	3500	5000	9.7	31	≤38	11.0	6.0	22	400	450	800
70.36	2744/39	F302_0700 ME10	4000	3900	6500	0.89	28	≤19	11.0	6.0	22	400	450	800
70.36	2744/39	F302_0700 ME20	3700	3700	6000	2.8	29	≤24	11.0	6.0	22	400	450	800
93.64	4214/45	F302_0940 ME10	4000	3900	6500	0.79	28	≤19	11.0	6.0	22	400	450	800
93.64	4214/45	F302_0940 ME20	3700	3700	6000	2.7	29	≤24	11.0	6.0	22	400	450	800
112.8	3724/33	F302_1130 ME10	4000	3900	6500	0.74	28	≤19	11.0	6.0	22	400	450	800

i	i_{exakt}	Type	n_{1MAXDB} EL1,2,3,4 [rpm]	n_{1MAXDB} EL5,6 [rpm]	n_{1MAXZB} [rpm]	J_1 [kgcm²]	m [kg]	d_{MW} [mm]	$\Delta\varphi_2$ [arcmin]	$\Delta\varphi_{2redII}$ [arcmin]	C_2 [Nm/arcmin]	M_{2N} [Nm]	M_{2acc} [Nm]	M_{2NOT} [Nm]
F302 ($M_{2acc,max}$ = 450 Nm)														
112.8	3724/33	F302_1130 ME20	3700	3700	6000	2.6	29	≤24	11.0	6.0	22	400	450	800
140.6	7595/54	F302_1410 ME10	4000	3900	6500	0.68	28	≤19	11.0	6.0	22	400	450	601
F303 ($M_{2acc,max}$ = 450 Nm)														
182.4	73892/405	F303_1820 ME20	3700	3700	6000	2.7	34	≤24	11.0	7.0	22	400	450	800
184.8	29939/162	F303_1850 ME10	4000	3900	6500	0.68	33	≤19	11.0	7.0	22	400	450	800
218.4	117943/540	F303_2180 ME20	3700	3700	6000	2.7	34	≤24	11.0	7.0	22	400	450	800
221.2	191149/864	F303_2210 ME10	4000	3900	6500	0.67	33	≤19	11.0	7.0	22	400	450	800
272.1	159152/585	F303_2720 ME20	3700	3700	6000	2.7	34	≤24	11.0	7.0	22	400	450	800
275.6	32242/117	F303_2760 ME10	4000	3900	6500	0.66	33	≤19	11.0	7.0	22	400	450	800
362.1	244412/675	F303_3620 ME20	3700	3700	6000	2.7	34	≤24	11.0	7.0	22	400	450	800
366.8	99029/270	F303_3670 ME10	4000	3900	6500	0.66	33	≤19	11.0	7.0	22	400	450	800
442.0	43757/99	F303_4420 ME10	4000	3900	6500	0.65	33	≤19	11.0	7.0	22	400	450	800
550.9	356965/648	F303_5510 ME10	4000	3900	6500	0.65	33	≤19	11.0	7.0	22	400	450	601
F402 ($M_{2acc,max}$ = 700 Nm)														
4.678	1408/301	F402_0047 ME30	2700	2300	4000	24	40	≤38	10.0	7.0	38	386	550	907
4.678	1408/301	F402_0047 ME40	2700	2300	4000	46	45	≤48	10.0	7.0	38	386	550	907
5.813	3784/651	F402_0058 ME30	2700	2300	4000	20	40	≤38	10.0	7.0	38	415	550	1100
5.813	3784/651	F402_0058 ME40	2700	2300	4000	42	45	≤48	10.0	7.0	38	415	550	1100
7.202	605/84	F402_0072 ME20	3200	2800	4800	11	38	≤32	10.0	7.0	38	419	419	524
7.202	605/84	F402_0072 ME30	3200	2800	4800	16	40	≤38	10.0	7.0	38	445	550	1100
7.202	605/84	F402_0072 ME40	3000	2800	4500	38	45	≤48	10.0	7.0	38	445	550	1100
8.980	440/49	F402_0090 ME20	3200	2800	4800	8.8	38	≤32	10.0	7.0	38	469	523	653
8.980	440/49	F402_0090 ME30	3200	2800	4800	14	40	≤38	10.0	7.0	38	479	550	1100
8.980	440/49	F402_0090 ME40	3000	2800	4500	36	45	≤48	10.0	7.0	38	479	550	1100
10.83	682/63	F402_0110 ME20	3500	3100	5500	7.5	38	≤32	10.0	7.0	38	487	550	788
10.83	682/63	F402_0110 ME30	3500	3100	5000	13	40	≤38	10.0	7.0	38	510	550	1100
10.83	682/63	F402_0110 ME40	3000	3000	4500	35	45	≤48	10.0	7.0	38	510	550	1100
13.57	5984/441	F402_0135 ME20	3500	3100	5500	6.4	38	≤32	10.0	7.0	38	536	550	932
13.57	5984/441	F402_0135 ME30	3500	3100	5000	12	40	≤38	10.0	7.0	39	550	550	1100
13.57	5984/441	F402_0135 ME40	3000	3000	4500	34	45	≤48	10.0	7.0	39	550	550	1100
18.62	3575/192	F402_0185 ME20	3200	2800	4800	7.3	38	≤32	10.0	5.0	39	611	700	1355
18.62	3575/192	F402_0185 ME30	3200	2800	4800	13	40	≤38	10.0	5.0	39	611	700	1400
18.62	3575/192	F402_0185 ME40	3000	2800	4500	35	45	≤48	10.0	5.0	39	611	700	1400
23.21	325/14	F402_0230 ME20	3200	2800	4800	6.4	38	≤32	10.0	5.0	39	658	700	1400
23.21	325/14	F402_0230 ME30	3200	2800	4800	12	40	≤38	10.0	5.0	39	658	700	1400
23.21	325/14	F402_0230 ME40	3000	2800	4500	34	45	≤48	10.0	5.0	39	658	700	1400
27.99	2015/72	F402_0280 ME20	3500	3100	5500	5.9	38	≤32	10.0	5.0	39	700	700	1400
27.99	2015/72	F402_0280 ME30	3500	3100	5000	11	40	≤38	10.0	5.0	39	700	700	1400
27.99	2015/72	F402_0280 ME40	3000	3000	4500	33	45	≤48	10.0	5.0	39	700	700	1400
35.08	2210/63	F402_0350 ME20	3500	3100	5500	5.3	38	≤32	10.0	5.0	39	700	700	1400
35.08	2210/63	F402_0350 ME30	3500	3100	5000	11	40	≤38	10.0	5.0	39	700	700	1400
35.08	2210/63	F402_0350 ME40	3000	3000	4500	33	45	≤48	10.0	5.0	39	700	700	1400
46.94	845/18	F402_0470 ME20	3700	3500	6000	4.9	38	≤32	10.0	5.0	39	700	700	1400
46.94	845/18	F402_0470 ME30	3500	3500	5000	10	40	≤38	10.0	5.0	39	700	700	1400
46.94	845/18	F402_0470 ME40	3000	3000	4500	32	45	≤48	10.0	5.0	39	700	700	1400
55.97	2015/36	F402_0560 ME20	3700	3500	6000	4.7	38	≤32	10.0	5.0	39	700	700	1400
55.97	2015/36	F402_0560 ME30	3500	3500	5000	10	40	≤38	10.0	5.0	39	700	700	1400
70.06	1261/18	F402_0700 ME20	3700	3500	6000	4.5	38	≤32	10.0	5.0	39	700	700	1400
70.06	1261/18	F402_0700 ME30	3500	3500	5000	9.8	40	≤38	10.0	5.0	39	700	700	1400
93.33	280/3	F402_0930 ME20	3700	3500	6000	2.8	38	≤24	10.0	5.0	39	700	700	1400
112.3	1235/11	F402_1120 ME20	3700	3500	6000	2.7	38	≤24	10.0	5.0	39	700	700	1400
139.8	559/4	F402_1400 ME20	3700	3500	6000	2.7	38	≤24	10.0	5.0	39	700	700	1400
F403 ($M_{2acc,max}$ = 700 Nm)														
181.5	4901/27	F403_1820 ME20	3700	3500	6000	2.7	42	≤24	10.0	6.0	39	700	700	1400
183.9	39715/216	F403_1840 ME10	3800	3500	6000	0.70	41	≤19	10.0	6.0	39	700	700	1179
216.4	11687/54	F403_2160 ME20	3700	3500	6000	2.7	42	≤24	10.0	6.0	39	700	700	1400
219.2	94705/432	F403_2190 ME10	3800	3500	6000	0.69	41	≤19	10.0	6.0	39	700	700	1400
270.9	36569/135	F403_2710 ME20	3700	3500	6000	2.7	42	≤24	10.0	6.0	39	700	700	1400
274.4	59267/216	F403_2740 ME10	3800	3500	6000	0.68	41	≤19	10.0	6.0	39	700	700	1400
360.9	3248/9	F403_3610 ME20	3700	3500	6000	2.7	42	≤24	10.0	6.0	39	700	700	1400
365.6	3290/9	F403_3660 ME10	3800	3500	6000	0.66	41	≤19	10.0	6.0	39	700	700	1400
434.1	14326/33	F403_4340 ME20	3700	3500	6000	2.7	42	≤24	10.0	6.0	39	700	700	1400

i	i_{exakt}	Type	n_{1MAXDB} EL1,2,3,4 [rpm]	n_{1MAXDB} EL5,6 [rpm]	n_{1MAXZB} [rpm]	J_1 [kgcm²]	m [kg]	d_{MW} [mm]	$\Delta\varphi_2$ [arcmin]	$\Delta\varphi_{2redII}$ [arcmin]	C_2 [Nm/arcmin]	M_{2N} [Nm]	M_{2acc} [Nm]	M_{2NOT} [Nm]
F403 ($M_{2acc,max}$ = 700 Nm)														
439.7	58045/132	F403_4400 ME10	3800	3500	6000	0.66	41	≤19	10.0	6.0	39	700	700	1400
547.4	26273/48	F403_5470 ME10	3800	3500	6000	0.66	41	≤19	10.0	6.0	39	700	700	1400
F602 ($M_{2acc,max}$ = 1100 Nm)														
4.546	1273/280	F602_0045 ME30	2500	2100	3500	46	67	≤38	10.0	7.0	69	581	706	883
4.546	1273/280	F602_0045 ME40	2500	2100	3500	68	72	≤48	10.0	7.0	69	638	706	883
5.673	1407/248	F602_0057 ME30	2500	2100	3500	34	67	≤38	10.0	7.0	70	646	881	1101
5.673	1407/248	F602_0057 ME40	2500	2100	3500	56	72	≤48	10.0	7.0	70	687	881	1101
7.159	3551/496	F602_0072 ME30	2900	2500	4500	26	67	≤38	10.0	7.0	71	702	1000	1385
7.159	3551/496	F602_0072 ME40	2900	2500	4500	48	72	≤48	10.0	7.0	71	743	1000	1385
8.995	1943/216	F602_0090 ME20	2900	2500	4500	15	65	≤32	10.0	7.0	70	524	524	655
8.995	1943/216	F602_0090 ME30	2900	2500	4500	20	67	≤38	10.0	7.0	72	764	1000	1600
8.995	1943/216	F602_0090 ME40	2900	2500	4500	42	72	≤48	10.0	7.0	72	801	1000	1600
10.82	2077/192	F602_0110 ME20	3300	2800	5000	12	65	≤32	10.0	7.0	71	564	630	787
10.82	2077/192	F602_0110 ME30	3300	2800	5000	17	67	≤38	10.0	7.0	72	819	1000	1600
10.82	2077/192	F602_0110 ME40	3000	2800	4500	39	72	≤48	10.0	7.0	72	852	1000	1600
13.61	871/64	F602_0135 ME20	3300	2800	5000	9.4	65	≤32	10.0	7.0	72	594	736	921
13.61	871/64	F602_0135 ME30	3300	2800	5000	15	67	≤38	10.0	7.0	72	862	1000	1600
13.61	871/64	F602_0135 ME40	3000	2800	4500	37	72	≤48	10.0	7.0	72	920	1000	1600
18.52	3445/186	F602_0185 ME30	2900	2500	4500	17	67	≤38	10.0	5.0	77	1019	1100	2000
18.52	3445/186	F602_0185 ME40	2900	2500	4500	39	72	≤48	10.0	5.0	77	1019	1100	2000
23.27	1885/81	F602_0230 ME20	2900	2500	4500	9.5	65	≤32	10.0	5.0	77	1100	1100	1693
23.27	1885/81	F602_0230 ME30	2900	2500	4500	15	67	≤38	10.0	5.0	77	1100	1100	2000
23.27	1885/81	F602_0230 ME40	2900	2500	4500	37	72	≤48	10.0	5.0	77	1100	1100	2000
27.99	2015/72	F602_0280 ME20	3300	2800	5000	8.2	65	≤32	10.0	5.0	77	1100	1100	2000
27.99	2015/72	F602_0280 ME30	3300	2800	5000	14	67	≤38	10.0	5.0	77	1100	1100	2000
27.99	2015/72	F602_0280 ME40	3000	2800	4500	36	72	≤48	10.0	5.0	77	1100	1100	2000
35.21	845/24	F602_0350 ME20	3300	2800	5000	7.0	65	≤32	10.0	5.0	77	1100	1100	2000
35.21	845/24	F602_0350 ME30	3300	2800	5000	12	67	≤38	10.0	5.0	77	1100	1100	2000
35.21	845/24	F602_0350 ME40	3000	2800	4500	34	72	≤48	10.0	5.0	77	1100	1100	2000
46.72	1495/32	F602_0470 ME20	3500	3200	5500	6.0	65	≤32	10.0	5.0	77	1100	1100	2000
46.72	1495/32	F602_0470 ME30	3500	3200	5000	11	67	≤38	10.0	5.0	77	1100	1100	2000
46.72	1495/32	F602_0470 ME40	3000	3000	4500	33	72	≤48	10.0	5.0	77	1100	1100	2000
55.71	390/7	F602_0560 ME20	3500	3200	5500	5.5	65	≤32	10.0	5.0	77	1100	1100	2000
55.71	390/7	F602_0560 ME30	3500	3200	5000	11	67	≤38	10.0	5.0	77	1100	1100	2000
69.64	975/14	F602_0700 ME20	3500	3200	5500	5.1	65	≤32	10.0	5.0	77	1100	1100	2000
69.64	975/14	F602_0700 ME30	3500	3200	5000	10	67	≤38	10.0	5.0	77	1100	1100	2000
93.33	280/3	F602_0930 ME20	3500	3200	5500	4.7	65	≤32	10.0	5.0	77	1100	1100	2000
93.33	280/3	F602_0930 ME30	3500	3200	5000	10	67	≤38	10.0	5.0	77	1100	1100	2000
112.2	9425/84	F602_1120 ME20	3500	3200	5500	3.0	65	≤24	10.0	5.0	77	1100	1100	2000
139.8	559/4	F602_1400 ME20	3500	3200	5500	2.8	65	≤24	10.0	5.0	77	1100	1100	2000
F603 ($M_{2acc,max}$ = 1100 Nm)														
180.6	8671/48	F603_1810 ME20	3500	3200	5500	2.8	69	≤24	10.0	6.0	77	1100	1100	2000
215.4	1508/7	F603_2150 ME20	3500	3200	5500	2.8	69	≤24	10.0	6.0	77	1100	1100	2000
269.3	1885/7	F603_2690 ME20	3500	3200	5500	2.8	69	≤24	10.0	6.0	77	1100	1100	2000
360.9	3248/9	F603_3610 ME20	3500	3200	5500	2.7	69	≤24	10.0	6.0	77	1100	1100	2000
433.8	54665/126	F603_4340 ME20	3500	3200	5500	2.7	69	≤24	10.0	6.0	77	1100	1100	2000
540.4	16211/30	F603_5400 ME20	3500	3200	5500	2.7	69	≤24	10.0	6.0	77	1100	1100	2000

8.3 Dimensional drawings

In this chapter, you can find the dimensions of the gear units as well as example dimensions of the mountable motor adapters.

Dimensions can exceed the specifications of ISO 2768-mK due to casting tolerances or accumulation of individual tolerances.

We reserve the right to make dimensional changes due to ongoing technical development.

You can download 3D models of our standard drives at http://configurator.stoeber.de.

Tolerances

Axis height in accordance with DIN 747	Tolerance
Up to 50 mm	-0.4 mm
Up to 250 mm	-0.5 mm
Up to 630 mm	-0.6 mm

Solid shaft	Tolerance
Shaft ∅ fit ≤ 50 mm	DIN 748-1, ISO k6
Shaft ∅ fit > 50 mm	DIN 748-1, ISO m6
Feather keys	DIN 6885-1, high form A

Hollow shaft	Tolerance
Hollow shaft hole fit	ISO H7
Feather keys	DIN 6885-1, high form

Flange	Pilot tolerance
Up to 300 mm	ISO j6
Starting at 350 mm	ISO h6

Centering holes in solid shafts in accordance with DIN 332-2, DR shape

Thread size	M4	M5	M6	M8	M10	M12	M16	M20	M24
Thread depth [mm]	10	12.5	16	19	22	28	36	42	50

8.3.1 A shaft design (hollow shaft), G housing design (pitch circle diameter)

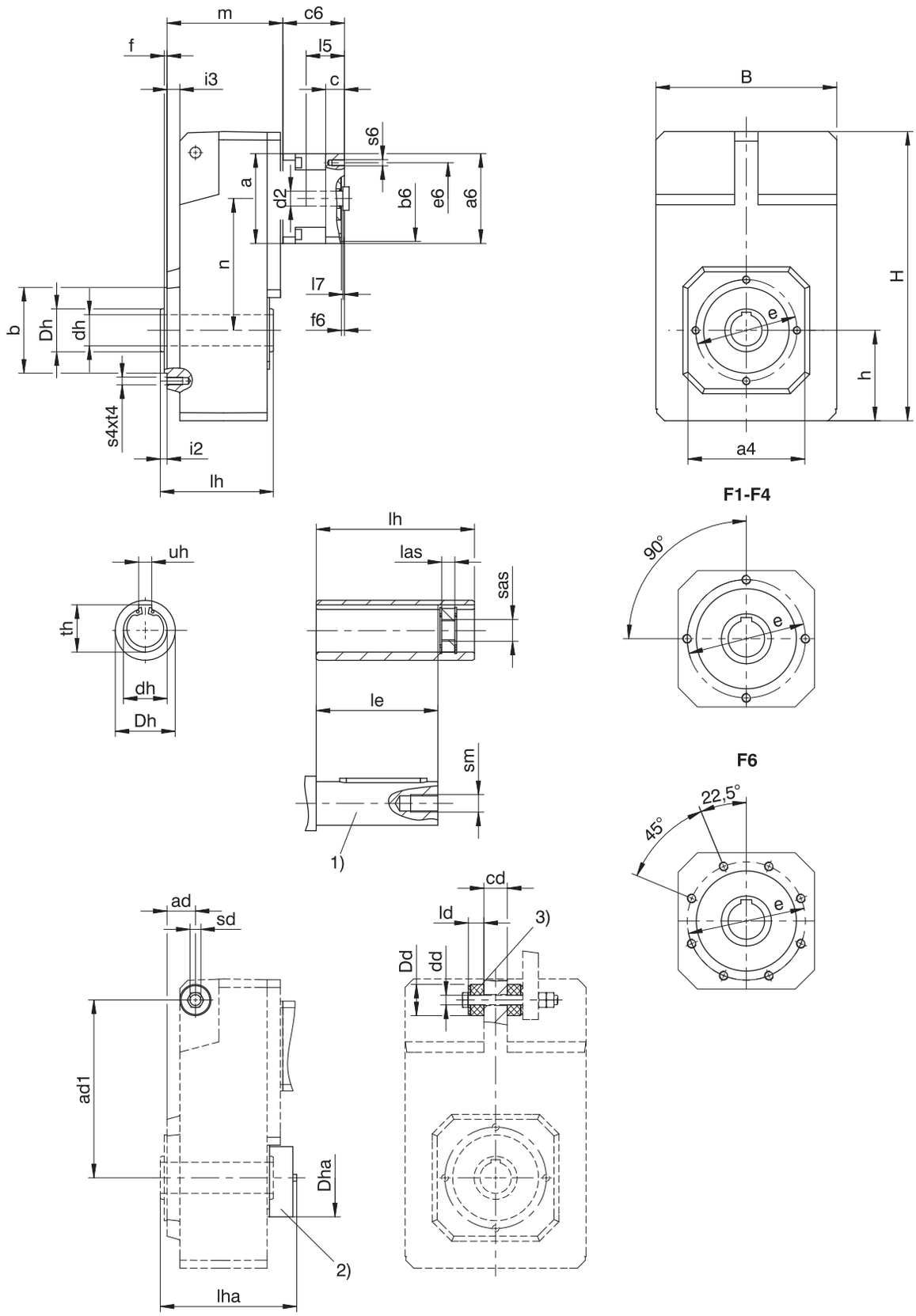

1) The length of the machine shaft must be at least 2.2 x ∅dh and the length of the feather key must be at least 2 x ∅dh.

2) Cover (optional)

3) Rubber buffer for torque arm bracket (optional). Dimension ∅Dd = outer∅ of the rubber buffer when not tensioned.

Dimensions of gear units

Type	□a4	ad	ad1	Øb	B	cd	Ødd	Ødh	ØDd	ØDh	ØDha	Øe	f	h	H	i2	i3	ld	le	lh	las	lha	s4	sd	sm	sas	t4	th	uh
F1	100	29.5	150	70_{j6}	145	20	$11.0^{+0,5}$	20^{H7}	30	35	70	85	2.5	74	238.0	6.5	12.5	15	73	95	12	112	M8	M10	M6	M8	13	22.8	6^{JS9}
F2	130	33.0	181	95_{j6}	180	22	$11.0^{+0,5}$	25^{H7}	30	45	82	115	3.0	93	299.0	8.0	15.0	15	92	115	12	130.5	M8	M10	M10	M12	13	28.3	8^{JS9}
F3	150	38.5	205	110_{j6}	206	30	$14.0^{+0,5}$	30^{H7}	37	50	88	130	3.5	106	335.5	8.5	16.5	20	103	130	12	155.5	M10	M12	M10	M12	16	33.3	8^{JS9}
F4	150	38.5	228	110_{j6}	230	30	$14.0^{+0,5}$	40^{H7}	37	55	100	130	3.5	116	370.0	8.5	16.5	20	114	145	12	174.5	M10	M12	M16	M20	16	43.3	12^{JS9}
F6	180	44.5	270	130_{j6}	265	35	$22.0^{+0,5}$	50^{H7}	60	70	115	165	3.5	137	433.0	10.5	20.5	30	143	180	12	192.5	M10	M20	M16	M20	16	53.8	14^{JS9}

Type	ME10			ME20			ME30			ME40		
	a	m	n	a	m	n	a	m	n	a	m	n
F102	□98	97.5	102.0	□115	101.5	102.0	–	–	–	–	–	–
F202	□98	115.0	131.0	□115	119.0	131.0	□145	121.0	131.0	–	–	–
F203	∅140	152.0	131.0	–	–	–	–	–	–	–	–	–
F302	∅140	129.5	149.5	□115	133.5	149.5	□145	135.5	149.5	–	–	–
F303	∅140	166.5	149.5	∅160	176.5	113.0	–	–	–	–	–	–
F402	–	–	–	∅160	148.5	169.0	□145	150.5	169.0	□190	153.5	169.0
F403	∅140	181.5	169.0	∅160	191.5	132.0	–	–	–	–	–	–
F602	–	–	–	∅160	179.5	196.0	□145	181.5	196.0	□190	184.5	196.0
F603	–	–	–	∅160	222.5	196.0	–	–	–	–	–	–

Example dimensions for the motor connection

Type	Øb6	Øe6	Ød2max	l5	□a6	c	c6	f6	l7	s6
F_ME10	95^{H7}	115	19	41	100	21	61	4.0	3.0	M8
F_ME20	110^{H7}	130	32	53	120	24	74	4.0	3.5	M8
F_ME30	130^{H7}	165	38	62	150	26	86	5.5	4.5	M10
F_ME40	180^{H7}	215	48	82	204	35	123	5.5	5.5	M12

In the table above, you will find example dimensions for the motor connection for the ME motor adapter. **Note that when dimension c is lengthened (depending on the motor used), dimensions c6, l5 and lg are also lengthened accordingly.**

You will find additional motor connection dimensions for the ME motor adapter in our STOBER Configurator at http://configurator.stoeber.de. Here, you can directly download a 3D model of your drive.

8.3.2 A shaft design (hollow shaft), GN housing design (pitch circle diameter + side fastening)

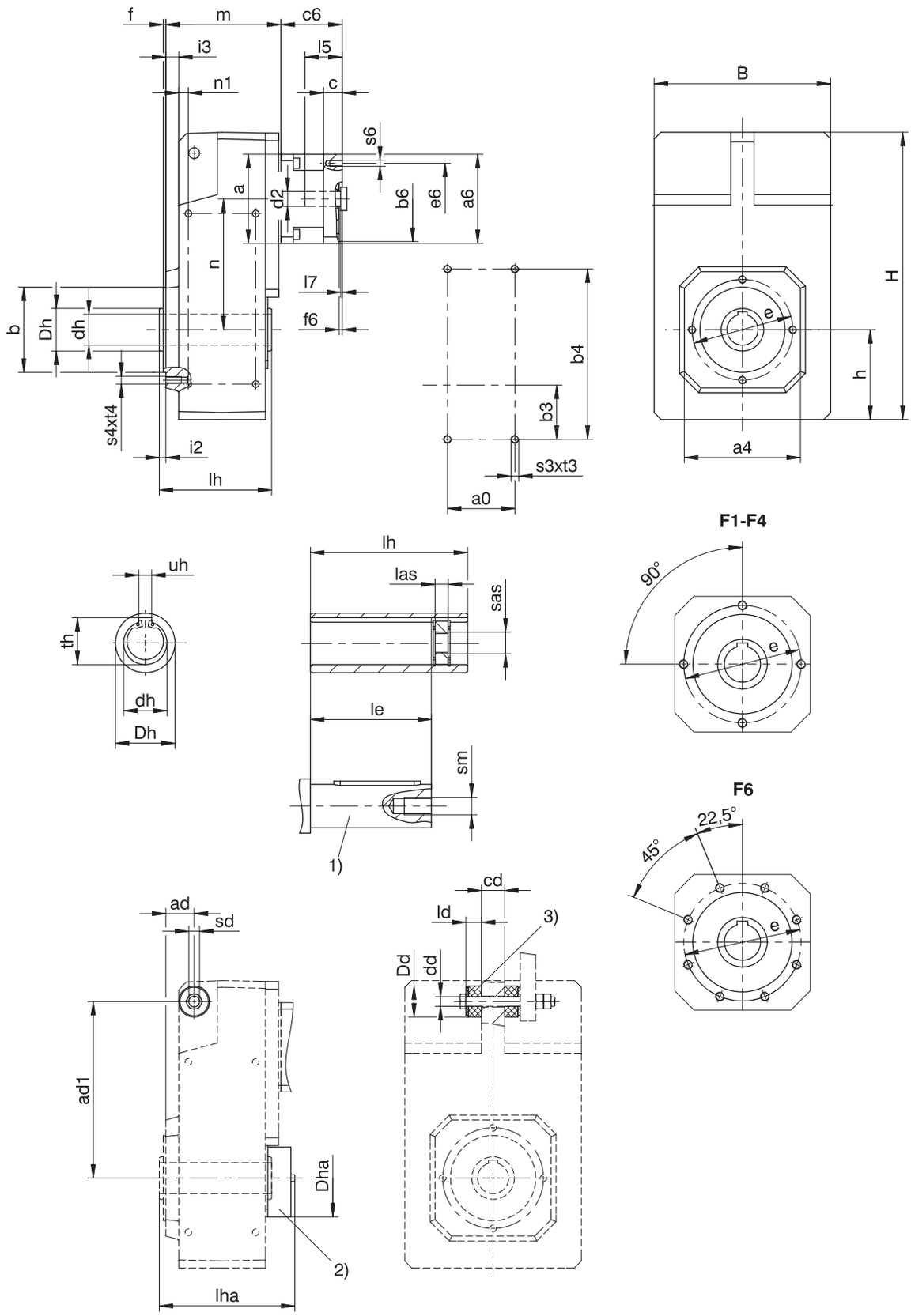

1) The length of the machine shaft must be at least 2.2 x ∅dh and the length of the feather key must be at least 2 x ∅dh.

2) Cover (optional)

3) Rubber buffer for torque arm bracket (optional). Dimension ∅Dd = outer∅ of the rubber buffer when not tensioned.

Dimensions of gear units

Type	a0	□a4	ad	ad1	Øb	b3	b4	B	cd	Ødd	Ødh	ØDd	ØDh	ØDha	Øe	f	h	H
F1	50	100	29.5	150	70_{j6}	40	140	145	20	$11.0^{+0,5}$	20^{H7}	30	35	70	85	2.5	74	238.0
F2	64	130	33.0	181	95_{j6}	55	175	180	22	$11.0^{+0,5}$	25^{H7}	30	45	82	115	3.0	93	299.0
F3	72	150	38.5	205	110_{j6}	60	200	206	30	$14.0^{+0,5}$	30^{H7}	37	50	88	130	3.5	106	335.5
F4	87	150	38.5	228	110_{j6}	70	220	230	30	$14.0^{+0,5}$	40^{H7}	37	55	100	130	3.5	116	370.0
F6	108	180	44.5	270	130_{j6}	85	270	265	35	$22.0^{+0,5}$	50^{H7}	60	70	115	165	3.5	137	433.0

Type	i2	i3	ld	le	lh	las	lha	n1	s3	s4	sd	sm	sas	t3	t4	th	uh
F1	6.5	12.5	15	73	95	12	112	10.0	M6	M8	M10	M6	M8	11	13	22.8	6^{JS9}
F2	8.0	15.0	15	92	115	12	130.5	10.5	M8	M8	M10	M10	M12	13	13	28.3	8^{JS9}
F3	8.5	16.5	20	103	130	12	155.5	12.5	M10	M10	M12	M10	M12	16	16	33.3	8^{JS9}
F4	8.5	16.5	20	114	145	12	174.5	12.5	M10	M10	M12	M16	M20	16	16	43.3	12^{JS9}
F6	10.5	20.5	30	143	180	12	192.5	15.5	M12	M10	M20	M16	M20	19	16	53.8	14^{JS9}

Type	ME10			ME20			ME30			ME40		
	a	m	n	a	m	n	a	m	n	a	m	n
F102	□98	97.5	102.0	□115	101.5	102.0	–	–	–	–	–	–
F202	□98	115.0	131.0	□115	119.0	131.0	□145	121.0	131.0	–	–	–
F203	∅140	152.0	131.0	–	–	–	–	–	–	–	–	–
F302	∅140	129.5	149.5	□115	133.5	149.5	□145	135.5	149.5	–	–	–
F303	∅140	166.5	149.5	∅160	176.5	113.0	–	–	–	–	–	–
F402	–	–	–	∅160	148.5	169.0	□145	150.5	169.0	□190	153.5	169.0
F403	∅140	181.5	169.0	∅160	191.5	132.0	–	–	–	–	–	–
F602	–	–	–	∅160	179.5	196.0	□145	181.5	196.0	□190	184.5	196.0
F603	–	–	–	∅160	222.5	196.0	–	–	–	–	–	–

Example dimensions for the motor connection

Type	Øb6	Øe6	Ød2max	l5	□a6	c	c6	f6	l7	s6
F_ME10	95^{H7}	115	19	41	100	21	61	4.0	3.0	M8
F_ME20	110^{H7}	130	32	53	120	24	74	4.0	3.5	M8
F_ME30	130^{H7}	165	38	62	150	26	86	5.5	4.5	M10
F_ME40	180^{H7}	215	48	82	204	35	123	5.5	5.5	M12

In the table above, you will find example dimensions for the motor connection for the ME motor adapter. **Note that when dimension c is lengthened (depending on the motor used), dimensions c6, l5 and lg are also lengthened accordingly.**

You will find additional motor connection dimensions for the ME motor adapter in our STOBER Configurator at http://configurator.stoeber.de. Here, you can directly download a 3D model of your drive.

8.3.3 A shaft design (hollow shaft), F housing design (round flange)

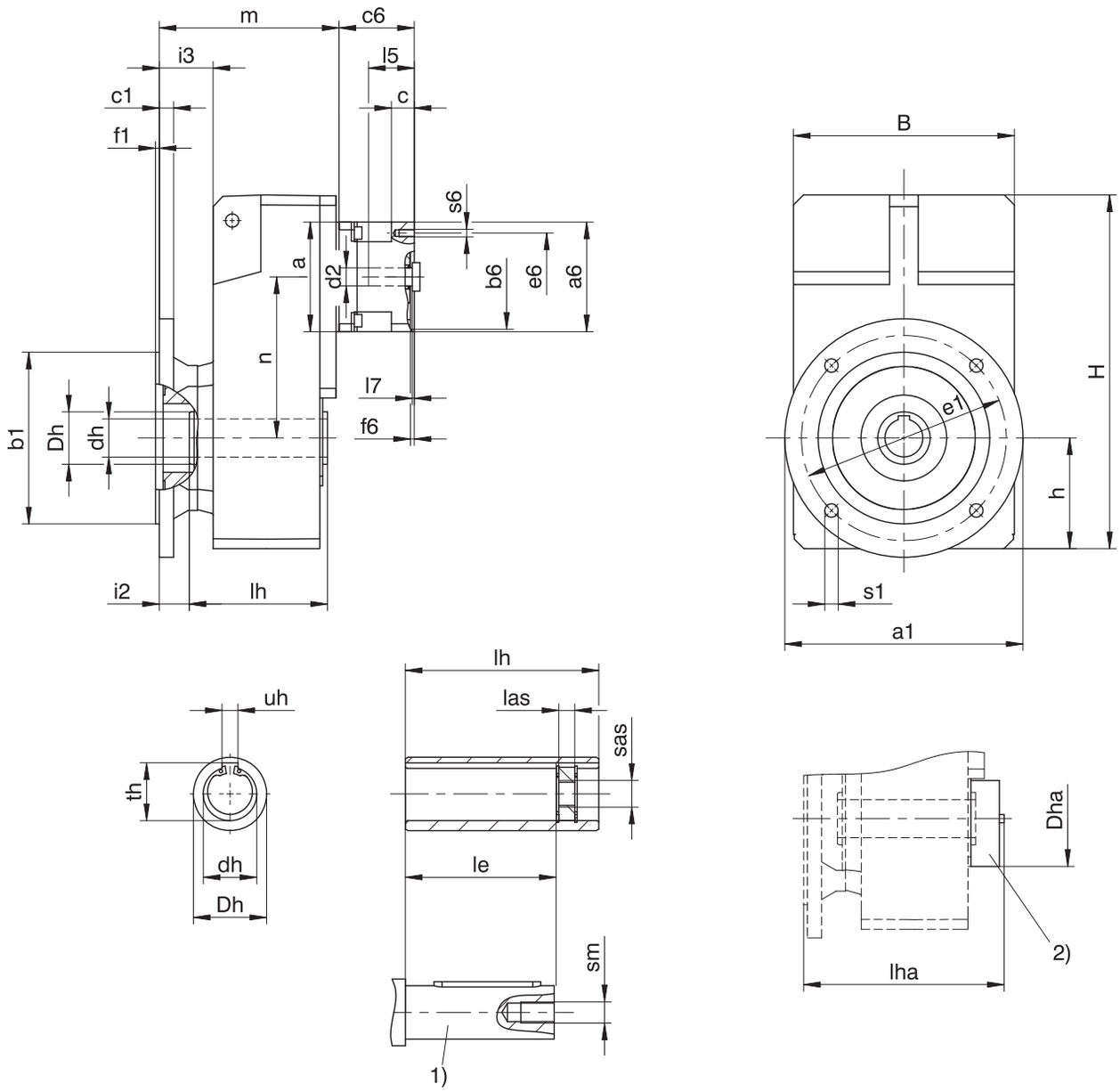

1) The length of the machine shaft must be at least 2.2 x ∅dh and the length of the feather key must be at least 2 x ∅dh.

2) Cover (optional)

Dimensions of gear units

Type	Øa1	Øb1	B	c1	Ødh	ØDh	ØDha	Øe1	f1	h	H	i2	i3	le	lh	las	lha	Øs1	sm	sas	th	uh
F1	160	110_{j6}	145	10	20^{H7}	35	70	130	3.5	74	238.0	25.5	44.5	73	95	12	112	9	M6	M8	22.8	6^{JS9}
F2	200	130_{j6}	180	14	25^{H7}	45	82	165	3.5	93	299.0	30.0	53.0	92	115	12	130.5	11	M10	M12	28.3	8^{JS9}
F3	250	180_{j6}	206	15	30^{H7}	50	88	215	4.0	106	335.5	31.5	56.5	103	130	12	155.5	14	M10	M12	33.3	8^{JS9}
F4	250	180_{j6}	230	15	40^{H7}	55	100	215	4.0	116	370.0	31.5	56.5	114	145	12	174.5	14	M16	M20	43.3	12^{JS9}
F6	300	230_{j6}	265	17	50^{H7}	70	115	265	4.0	137	433.0	29.5	60.5	143	180	12	192.5	14	M16	M20	53.8	14^{JS9}

Type	ME10			ME20			ME30			ME40		
	a	m	n	a	m	n	a	m	n	a	m	n
F102	□98	129.5	102.0	□115	133.5	102.0	–	–	–	–	–	–
F202	□98	153.0	131.0	□115	157.0	131.0	□145	159.0	131.0	–	–	–
F203	∅140	190.0	131.0	–	–	–	–	–	–	–	–	–
F302	∅140	169.5	149.5	□115	173.5	149.5	□145	175.5	149.5	–	–	–
F303	∅140	206.5	149.5	∅160	216.5	113.0	–	–	–	–	–	–
F402	–	–	–	∅160	188.5	169.0	□145	190.5	169.0	□190	193.5	169.0
F403	∅140	221.5	169.0	∅160	231.5	132.0	–	–	–	–	–	–
F602	–	–	–	∅160	219.5	196.0	□145	221.5	196.0	□190	224.5	196.0
F603	–	–	–	∅160	262.5	196.0	–	–	–	–	–	–

Example dimensions for the motor connection

Type	Øb6	Øe6	Ød2max	l5	□a6	c	c6	f6	l7	s6
F_ME10	95^{H7}	115	19	41	100	21	61	4.0	3.0	M8
F_ME20	110^{H7}	130	32	53	120	24	74	4.0	3.5	M8
F_ME30	130^{H7}	165	38	62	150	26	86	5.5	4.5	M10
F_ME40	180^{H7}	215	48	82	204	35	123	5.5	5.5	M12

In the table above, you will find example dimensions for the motor connection for the ME motor adapter. **Note that when dimension c is lengthened (depending on the motor used), dimensions c6, l5 and lg are also lengthened accordingly.**

You will find additional motor connection dimensions for the ME motor adapter in our STOBER Configurator at http://configurator.stoeber.de. Here, you can directly download a 3D model of your drive.

8.3.4 A shaft design (hollow shaft), Q housing design (square flange)

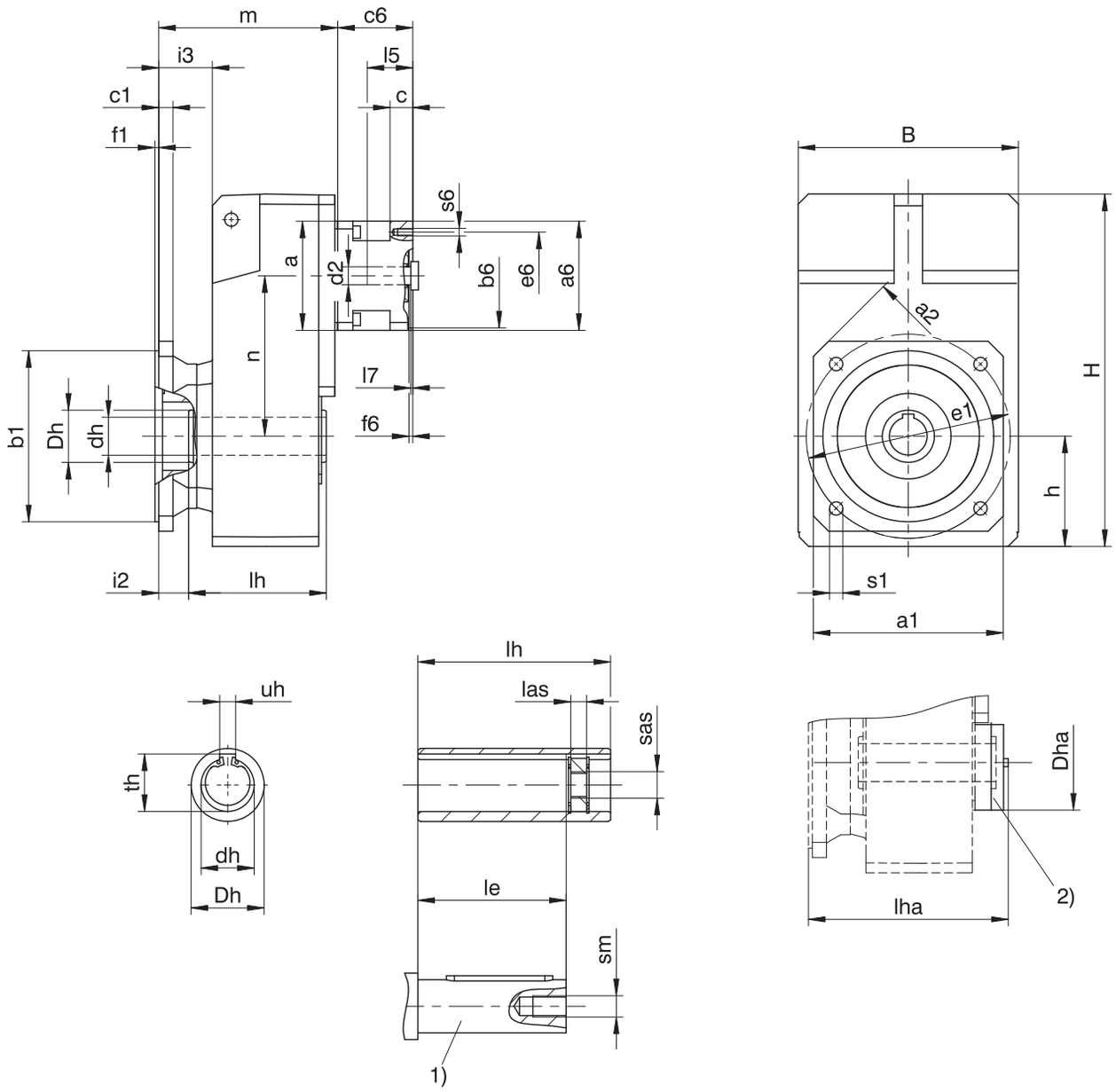

1) The length of the machine shaft must be at least 2.2 x ∅dh and the length of the feather key must be at least 2 x ∅dh.

2) Cover (optional)

Dimensions of gear units

Type	□a1	□a2	Øb1	B	c1	Ødh	ØDh	ØDha	Øe1	f1	h	H	i2	i3	le	lh	las	lha	Øs1	sm	sas	th	uh
F1	125	160	110_{j6}	145	10	20^{H7}	35	70	130	3.5	74	238.0	25.5	44.5	73	95	12	112	9	M6	M8	22.8	6^{JS9}
F2	150	195	130_{j6}	180	14	25^{H7}	45	82	165	3.5	93	299.0	30.0	53.0	92	115	12	130.5	11	M10	M12	28.3	8^{JS9}
F3	200	260	180_{j6}	206	15	30^{H7}	50	88	215	4.0	106	335.5	31.5	56.5	103	130	12	155.5	14	M10	M12	33.3	8^{JS9}
F4	200	260	180_{j6}	230	15	40^{H7}	55	100	215	4.0	116	370.0	31.5	56.5	114	145	12	174.5	14	M16	M20	43.3	12^{JS9}
F6	250	325	230_{j6}	265	17	50^{H7}	70	115	265	4.0	137	433.0	29.5	60.5	143	180	12	192.5	14	M16	M20	53.8	14^{JS9}

Type	ME10			ME20			ME30			ME40		
	a	m	n	a	m	n	a	m	n	a	m	n
F102	□98	129.5	102.0	□115	133.5	102.0	–	–	–	–	–	–
F202	□98	153.0	131.0	□115	157.0	131.0	□145	159.0	131.0	–	–	–
F203	∅140	190.0	131.0	–	–	–	–	–	–	–	–	–
F302	∅140	169.5	149.5	□115	173.5	149.5	□145	175.5	149.5	–	–	–
F303	∅140	206.5	149.5	∅160	216.5	113.0	–	–	–	–	–	–
F402	–	–	–	∅160	188.5	169.0	□145	190.5	169.0	□190	193.5	169.0
F403	∅140	221.5	169.0	∅160	231.5	132.0	–	–	–	–	–	–
F602	–	–	–	∅160	219.5	196.0	□145	221.5	196.0	□190	224.5	196.0
F603	–	–	–	∅160	262.5	196.0	–	–	–	–	–	–

Example dimensions for the motor connection

Type	Øb6	Øe6	Ød2max	l5	□a6	c	c6	f6	l7	s6
F_ME10	95^{H7}	115	19	41	100	21	61	4.0	3.0	M8
F_ME20	110^{H7}	130	32	53	120	24	74	4.0	3.5	M8
F_ME30	130^{H7}	165	38	62	150	26	86	5.5	4.5	M10
F_ME40	180^{H7}	215	48	82	204	35	123	5.5	5.5	M12

In the table above, you will find example dimensions for the motor connection for the ME motor adapter. **Note that when dimension c is lengthened (depending on the motor used), dimensions c6, l5 and lg are also lengthened accordingly.**

You will find additional motor connection dimensions for the ME motor adapter in our STOBER Configurator at http://configurator.stoeber.de. Here, you can directly download a 3D model of your drive.

8.3.5 V shaft design (solid shaft), F housing design (round flange)

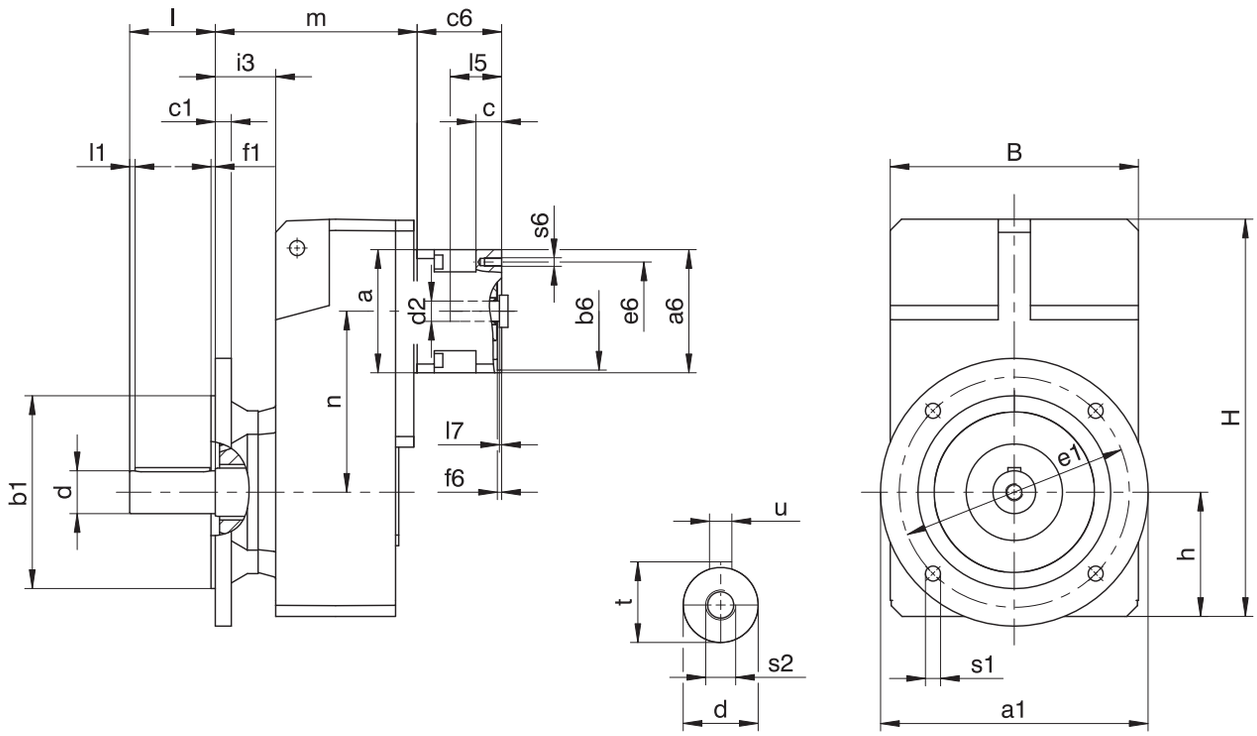

Dimensions of gear units

Type	Øa1	Øb1	B	c1	Ød	Øe1	f1	h	H	i3	l	l1	Øs1	s2	t	u
F1	160	110_{j6}	145	10	25_{k6}	130	3.5	74	238.0	44.5	50	5	9	M10	28.0	A8×7×40
F2	200	130_{j6}	180	14	30_{k6}	165	3.5	93	299.0	53.0	60	5	11	M10	33.0	A8×7×50
F3	250	180_{j6}	206	15	35_{k6}	215	4.0	106	335.5	56.5	70	5	14	M12	38.0	A10×8×60
F4	250	180_{j6}	230	15	40_{k6}	215	4.0	116	370.0	56.5	80	5	14	M16	43.0	A12×8×70
F6	300	230_{j6}	265	17	50_{k6}	265	4.0	137	433.0	60.5	100	5	14	M16	53.5	A14×9×90

Type	ME10			ME20			ME30			ME40		
	a	m	n	a	m	n	a	m	n	a	m	n
F102	□98	129.5	102.0	□115	133.5	102.0	–	–	–	–	–	–
F202	□98	153.0	131.0	□115	157.0	131.0	□145	159.0	131.0	–	–	–
F203	∅140	190.0	131.0	–	–	–	–	–	–	–	–	–
F302	∅140	169.5	149.5	□115	173.5	149.5	□145	175.5	149.5	–	–	–
F303	∅140	206.5	149.5	∅160	216.5	113.0	–	–	–	–	–	–
F402	–	–	–	∅160	188.5	169.0	□145	190.5	169.0	□190	193.5	169.0
F403	∅140	221.5	169.0	∅160	231.5	132.0	–	–	–	–	–	–
F602	–	–	–	∅160	219.5	196.0	□145	221.5	196.0	□190	224.5	196.0
F603	–	–	–	∅160	262.5	196.0	–	–	–	–	–	–

Example dimensions for the motor connection

Type	Øb6	Øe6	Ød2max	l5	□a6	c	c6	f6	l7	s6
F_ME10	95^{H7}	115	19	41	100	21	61	4.0	3.0	M8
F_ME20	110^{H7}	130	32	53	120	24	74	4.0	3.5	M8
F_ME30	130^{H7}	165	38	62	150	26	86	5.5	4.5	M10
F_ME40	180^{H7}	215	48	82	204	35	123	5.5	5.5	M12

In the table above, you will find example dimensions for the motor connection for the ME motor adapter. **Note that when dimension c is lengthened (depending on the motor used), dimensions c6, l5 and lg are also lengthened accordingly.**

You will find additional motor connection dimensions for the ME motor adapter in our STOBER Configurator at http://configurator.stoeber.de. Here, you can directly download a 3D model of your drive.

8.3.6 V shaft design (solid shaft), Q housing design (square flange)

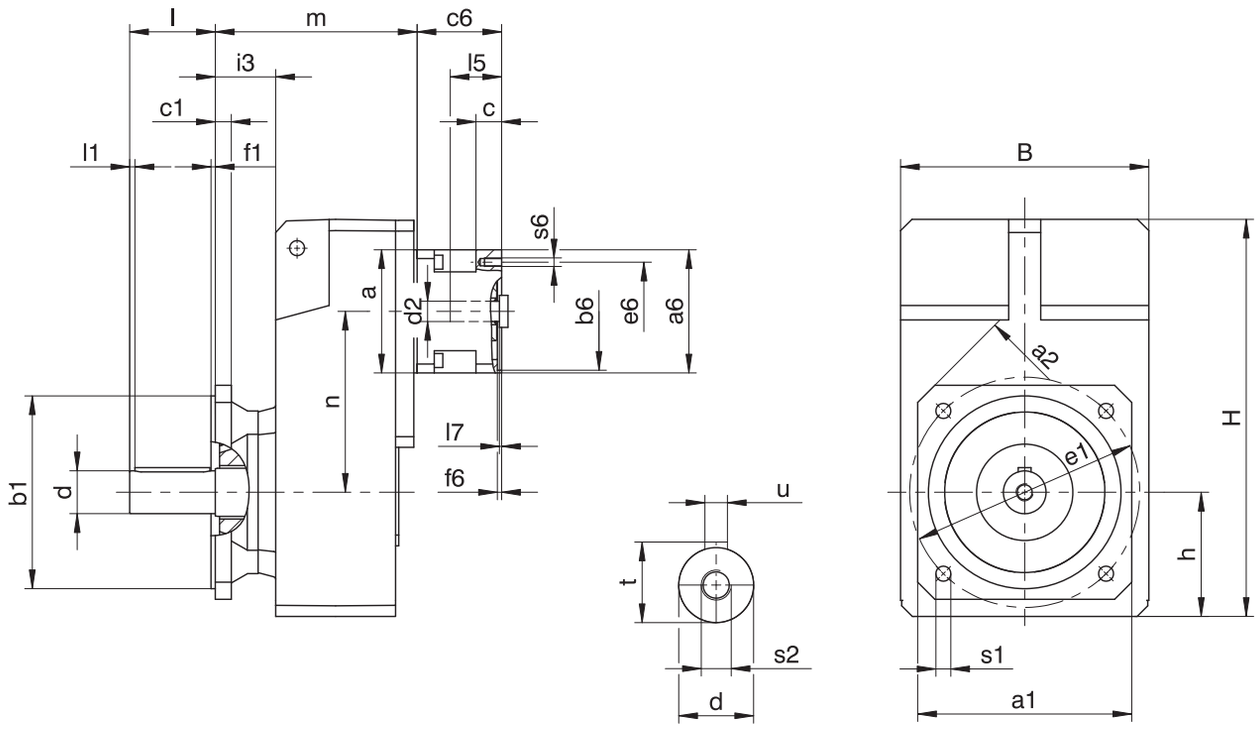

Dimensions of gear units

Type	□a1	□a2	Øb1	c1	B	Ød	Øe1	f1	h	H	i3	l	l1	Øs1	s2	t	u
F1	125	160	110_{j6}	10	145	25_{k6}	130	3.5	74	238.0	44.5	50	5	9	M10	28.0	A8×7×40
F2	150	195	130_{j6}	14	180	30_{k6}	165	3.5	93	299.0	53.0	60	5	11	M10	33.0	A8×7×50
F3	200	260	180_{j6}	15	206	35_{k6}	215	4.0	106	335.5	56.5	70	5	14	M12	38.0	A10×8×60
F4	200	260	180_{j6}	15	230	40_{k6}	215	4.0	116	370.0	56.5	80	5	14	M16	43.0	A12×8×70
F6	250	325	230_{j6}	17	265	50_{k6}	265	4.0	137	433.0	60.5	100	5	14	M16	53.5	A14×9×90

Type	ME10			ME20			ME30			ME40		
	a	m	n	a	m	n	a	m	n	a	m	n
F102	□98	129.5	102.0	□115	133.5	102.0	–	–	–	–	–	–
F202	□98	153.0	131.0	□115	157.0	131.0	□145	159.0	131.0	–	–	–
F203	∅140	190.0	131.0	–	–	–	–	–	–	–	–	–
F302	∅140	169.5	149.5	□115	173.5	149.5	□145	175.5	149.5	–	–	–
F303	∅140	206.5	149.5	∅160	216.5	113.0	–	–	–	–	–	–
F402	–	–	–	∅160	188.5	169.0	□145	190.5	169.0	□190	193.5	169.0
F403	∅140	221.5	169.0	∅160	231.5	132.0	–	–	–	–	–	–
F602	–	–	–	∅160	219.5	196.0	□145	221.5	196.0	□190	224.5	196.0
F603	–	–	–	∅160	262.5	196.0	–	–	–	–	–	–

Example dimensions for the motor connection

Type	Øb6	Øe6	Ød2max	l5	□a6	c	c6	f6	l7	s6
F_ME10	95^{H7}	115	19	41	100	21	61	4.0	3.0	M8
F_ME20	110^{H7}	130	32	53	120	24	74	4.0	3.5	M8
F_ME30	130^{H7}	165	38	62	150	26	86	5.5	4.5	M10
F_ME40	180^{H7}	215	48	82	204	35	123	5.5	5.5	M12

In the table above, you will find example dimensions for the motor connection for the ME motor adapter. **Note that when dimension c is lengthened (depending on the motor used), dimensions c6, l5 and lg are also lengthened accordingly.**

You will find additional motor connection dimensions for the ME motor adapter in our STOBER Configurator at http://configurator.stoeber.de. Here, you can directly download a 3D model of your drive.

8.3.7 S shaft design (hollow shaft with shrink ring), G housing design (pitch circle diameter)

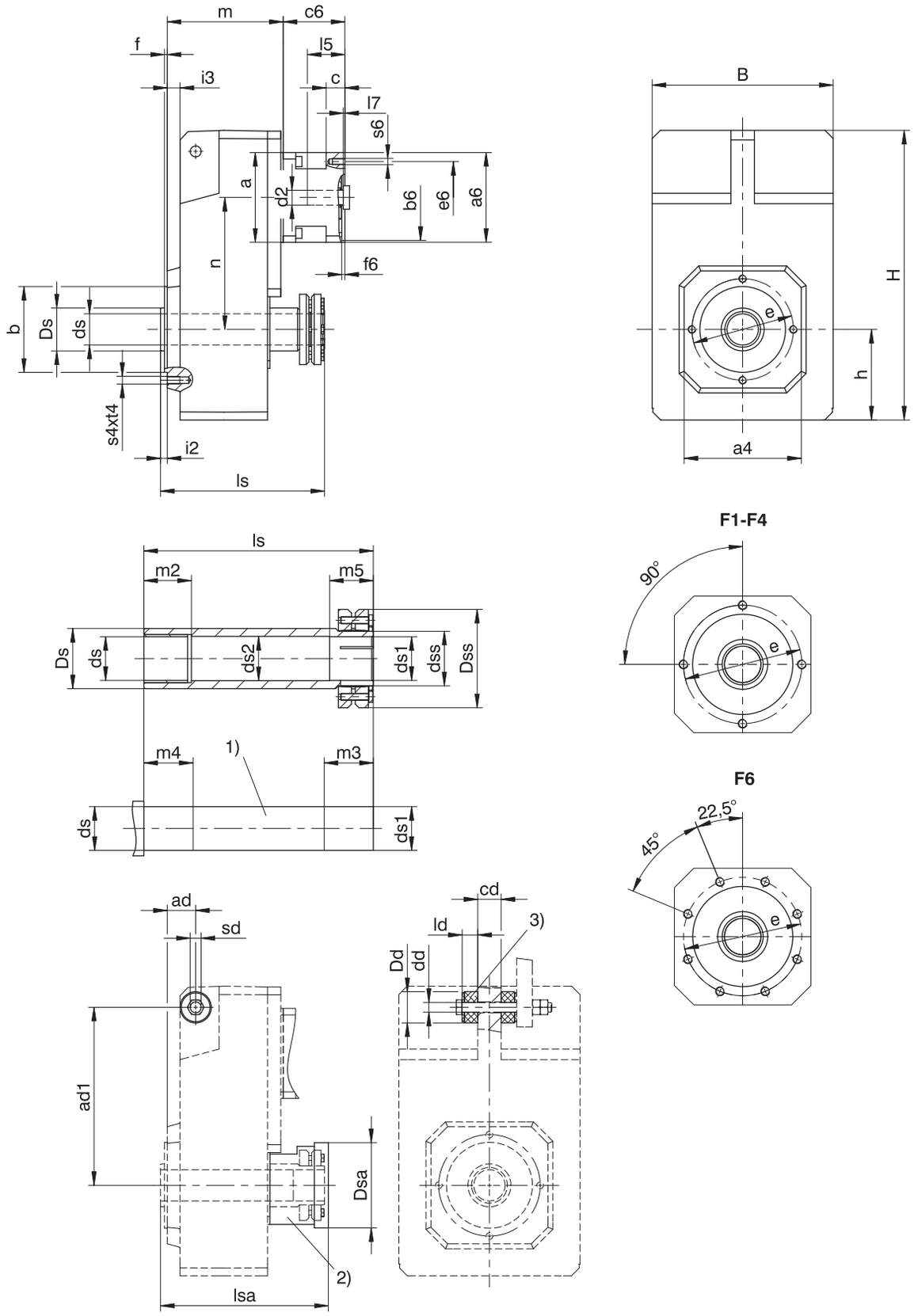

1) Machine shaft: The dimension ls must meet or exceed the specified value.

2) Cover (optional)

3) Rubber buffer for torque arm bracket (optional). Dimension ∅Dd = outer∅ of the rubber buffer when not tensioned.

Dimensions of gear units

Type	□a4	ad	ad1	Øb	B	cd	Ødd	Øds	Øds1	Øds2	Ødss	ØDd	ØDs	ØDsa	ØDss	Øe	f	h	H	i2	i3	ld	ls	lsa	m2	m3	m4	m5	s4	sd	t4
F1	100	29.5	150	70_{j6}	145	20	$11.0^{+0,5}$	20_{h9}	20_{h9}^{H7}	20.5	24	30	35	63	50	85	2.5	74	238.0	6.5	12.5	15	146	150	20	31	25	26	M8	M10	13
F2	130	33.0	181	95_{j6}	180	22	$11.0^{+0,5}$	25_{h9}	25_{h9}^{H7}	25.5	30	30	45	73	60	115	3.0	93	299.0	8.0	15.0	15	175	180	20	37	25	32	M8	M10	13
F3	150	38.5	205	110_{j6}	206	30	$14.0^{+0,5}$	30_{h9}	30_{h9}^{H7}	30.5	36	37	50	83	72	130	3.5	106	335.5	8.5	16.5	20	192	196	25	37	30	32	M10	M12	16
F4	150	38.5	228	110_{j6}	230	30	$14.0^{+0,5}$	40_{h9}	40_{h9}^{H7}	40.5	50	37	55	108	90	130	3.5	116	370.0	8.5	16.5	20	210	215	40	45	45	40	M10	M12	16
F6	180	44.5	270	130_{j6}	265	35	$22.0^{+0,5}$	50_{h9}	50_{h9}^{H7}	50.5	62	60	70	128	106	165	3.5	137	433.0	10.5	20.5	30	248	251	40	47	45	42	M10	M20	16

Type	ME10			ME20			ME30			ME40		
	a	m	n	a	m	n	a	m	n	a	m	n
F102	□98	97.5	102.0	□115	101.5	102.0	–	–	–	–	–	–
F202	□98	115.0	131.0	□115	119.0	131.0	□145	121.0	131.0	–	–	–
F203	∅140	152.0	131.0	–	–	–	–	–	–	–	–	–
F302	∅140	129.5	149.5	□115	133.5	149.5	□145	135.5	149.5	–	–	–
F303	∅140	166.5	149.5	∅160	176.5	113.0	–	–	–	–	–	–
F402	–	–	–	∅160	148.5	169.0	□145	150.5	169.0	□190	153.5	169.0
F403	∅140	181.5	169.0	∅160	191.5	132.0	–	–	–	–	–	–
F602	–	–	–	∅160	179.5	196.0	□145	181.5	196.0	□190	184.5	196.0
F603	–	–	–	∅160	222.5	196.0	–	–	–	–	–	–

Example dimensions for the motor connection

Type	Øb6	Øe6	Ød2max	l5	□a6	c	c6	f6	l7	s6
F_ME10	95^{H7}	115	19	41	100	21	61	4.0	3.0	M8
F_ME20	110^{H7}	130	32	53	120	24	74	4.0	3.5	M8
F_ME30	130^{H7}	165	38	62	150	26	86	5.5	4.5	M10
F_ME40	180^{H7}	215	48	82	204	35	123	5.5	5.5	M12

In the table above, you will find example dimensions for the motor connection for the ME motor adapter. **Note that when dimension c is lengthened (depending on the motor used), dimensions c6, l5 and lg are also lengthened accordingly.**

You will find additional motor connection dimensions for the ME motor adapter in our STOBER Configurator at http://configurator.stoeber.de. Here, you can directly download a 3D model of your drive.

8.3.8 S shaft design (hollow shaft with shrink ring), GN housing design (pitch circle diameter + side fastening)

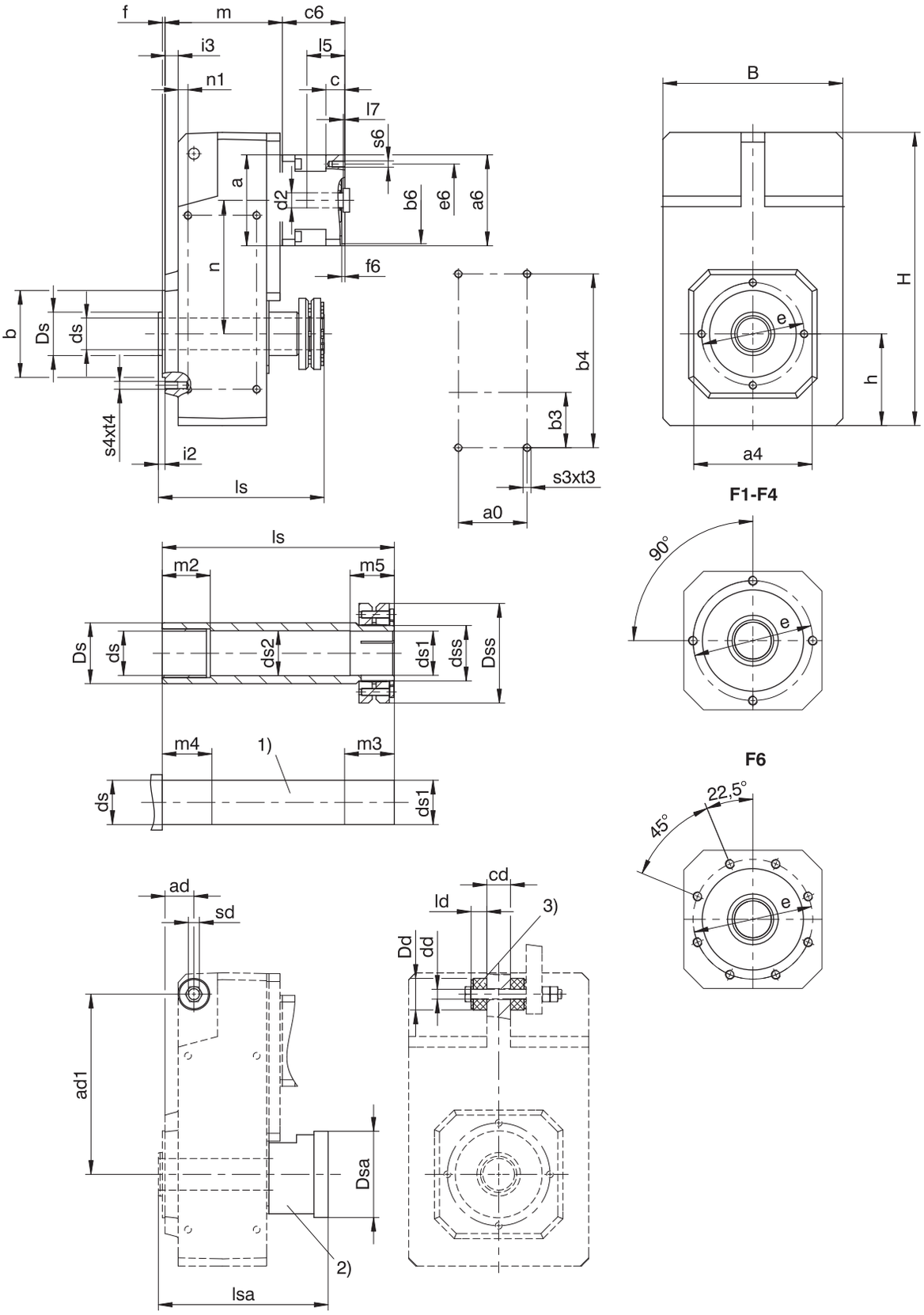

1) Machine shaft: The dimension ls must meet or exceed the specified value.

2) Cover (optional)

3) Rubber buffer for torque arm bracket (optional). Dimension ∅Dd = outer∅ of the rubber buffer when not tensioned.

Dimensions of gear units

Type	a0	□a4	ad	ad1	Øb	b3	b4	B	cd	Ødd	Øds	Øds1	Øds2	Ødss	ØDd	ØDs	ØDsa	ØDss
F1	50	100	29.5	150	70_{j6}	40	140	145	20	$11.0^{+0,5}$	20_{h9}	20_{h9}^{H7}	20.5	24	30	35	63	50
F2	64	130	33.0	181	95_{j6}	55	175	180	22	$11.0^{+0,5}$	25_{h9}	25_{h9}^{H7}	25.5	30	30	45	73	60
F3	72	150	38.5	205	110_{j6}	60	200	206	30	$14.0^{+0,5}$	30_{h9}	30_{h9}^{H7}	30.5	36	37	50	83	72
F4	87	150	38.5	228	110_{j6}	70	220	230	30	$14.0^{+0,5}$	40_{h9}	40_{h9}^{H7}	40.5	50	37	55	108	90
F6	108	180	44.5	270	130_{j6}	85	270	265	35	$22.0^{+0,5}$	50_{h9}	50_{h9}^{H7}	50.5	62	60	70	128	106

Type	Øe	f	h	H	i2	i3	ld	ls	lsa	n1	m2	m3	m4	m5	s3	s4	sd	t3	t4
F1	85	2.5	74	238.0	6.5	12.5	15	146	150	10	20	31	25	26	M6	M8	M10	11	13
F2	115	3.0	93	299.0	8.0	15.0	15	175	180	10.5	20	37	25	32	M8	M8	M10	13	13
F3	130	3.5	106	335.5	8.5	16.5	20	192	196	12.5	25	37	30	32	M10	M10	M12	16	16
F4	130	3.5	116	370.0	8.5	16.5	20	210	215	12.5	40	45	45	40	M10	M10	M12	16	16
F6	165	3.5	137	433.0	10.5	20.5	30	248	251	15.5	40	47	45	42	M12	M10	M20	19	16

Type	ME10			ME20			ME30			ME40		
	a	m	n	a	m	n	a	m	n	a	m	n
F102	□98	97.5	102.0	□115	101.5	102.0	–	–	–	–	–	–
F202	□98	115.0	131.0	□115	119.0	131.0	□145	121.0	131.0	–	–	–
F203	∅140	152.0	131.0	–	–	–	–	–	–	–	–	–
F302	∅140	129.5	149.5	□115	133.5	149.5	□145	135.5	149.5	–	–	–
F303	∅140	166.5	149.5	∅160	176.5	113.0	–	–	–	–	–	–
F402	–	–	–	∅160	148.5	169.0	□145	150.5	169.0	□190	153.5	169.0
F403	∅140	181.5	169.0	∅160	191.5	132.0	–	–	–	–	–	–
F602	–	–	–	∅160	179.5	196.0	□145	181.5	196.0	□190	184.5	196.0
F603	–	–	–	∅160	222.5	196.0	–	–	–	–	–	–

Example dimensions for the motor connection

Type	Øb6	Øe6	Ød2max	l5	□a6	c	c6	f6	l7	s6
F_ME10	95^{H7}	115	19	41	100	21	61	4.0	3.0	M8
F_ME20	110^{H7}	130	32	53	120	24	74	4.0	3.5	M8
F_ME30	130^{H7}	165	38	62	150	26	86	5.5	4.5	M10
F_ME40	180^{H7}	215	48	82	204	35	123	5.5	5.5	M12

In the table above, you will find example dimensions for the motor connection for the ME motor adapter. **Note that when dimension c is lengthened (depending on the motor used), dimensions c6, l5 and lg are also lengthened accordingly.**

You will find additional motor connection dimensions for the ME motor adapter in our STOBER Configurator at http://configurator.stoeber.de. Here, you can directly download a 3D model of your drive.

8.3.9 S shaft design (hollow shaft with shrink ring), F housing design (round flange)

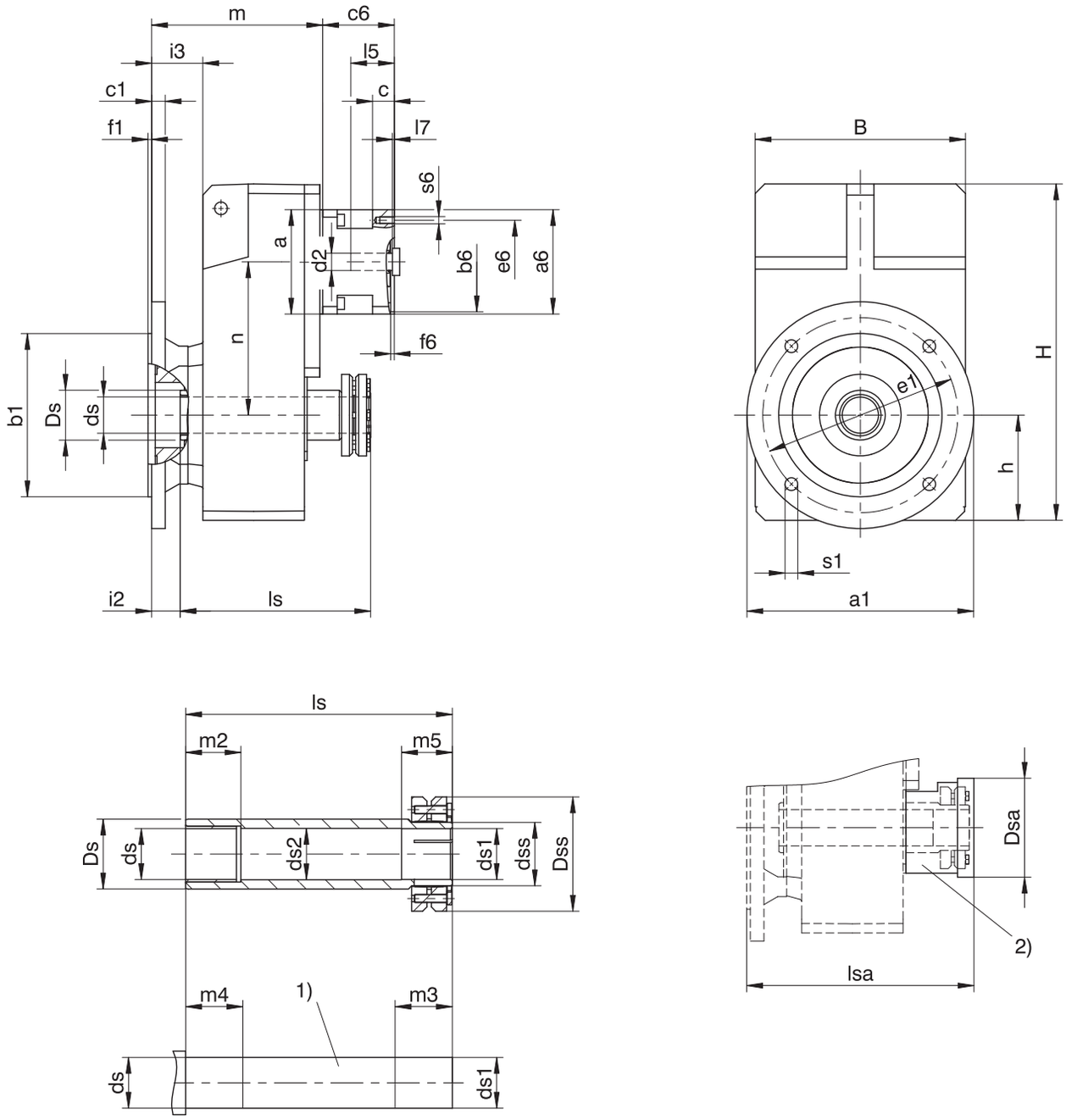

1) Machine shaft: The dimension ls must meet or exceed the specified value.

2) Cover (optional)

Dimensions of gear units

Type	Øa1	Øb1	B	c1	Øds	Øds1	Øds2	Ødss	ØDs	ØDsa	ØDss	Øe1	f1	h	H	i2	i3	ls	lsa	m2	m3	m4	m5	Øs1
F1	160	110_{j6}	145	10	20_{h9}	20_{h9}^{H7}	20.5	24	35	63	50	130	3.5	74	238.0	25.5	44.5	146	150	20	31	25	26	9
F2	200	130_{j6}	180	14	25_{h9}	25_{h9}^{H7}	25.5	30	45	73	60	165	3.5	93	299.0	30.0	53.0	175	180	20	37	25	32	11
F3	250	180_{j6}	206	15	30_{h9}	30_{h9}^{H7}	30.5	36	50	83	72	215	4.0	106	335.5	31.5	56.5	192	196	25	37	30	32	14
F4	250	180_{j6}	230	15	40_{h9}	40_{h9}^{H7}	40.5	50	55	108	90	215	4.0	116	370.0	31.5	56.5	210	215	40	45	45	40	14
F6	300	230_{j6}	265	17	50_{h9}	50_{h9}^{H7}	50.5	62	70	128	106	265	4.0	137	433.0	29.5	60.5	248	251	40	47	45	42	14

Type	ME10			ME20			ME30			ME40		
	a	m	n	a	m	n	a	m	n	a	m	n
F102	□98	129.5	102.0	□115	133.5	102.0	–	–	–	–	–	–
F202	□98	153.0	131.0	□115	157.0	131.0	□145	159.0	131.0	–	–	–
F203	∅140	190.0	131.0	–	–	–	–	–	–	–	–	–
F302	∅140	169.5	149.5	□115	173.5	149.5	□145	175.5	149.5	–	–	–
F303	∅140	206.5	149.5	∅160	216.5	113.0	–	–	–	–	–	–
F402	–	–	–	∅160	188.5	169.0	□145	190.5	169.0	□190	193.5	169.0
F403	∅140	221.5	169.0	∅160	231.5	132.0	–	–	–	–	–	–
F602	–	–	–	∅160	219.5	196.0	□145	221.5	196.0	□190	224.5	196.0
F603	–	–	–	∅160	262.5	196.0	–	–	–	–	–	–

Example dimensions for the motor connection

Type	∅b6	∅e6	∅d2max	l5	□a6	c	c6	f6	l7	s6
F_ME10	95^{H7}	115	19	41	100	21	61	4.0	3.0	M8
F_ME20	110^{H7}	130	32	53	120	24	74	4.0	3.5	M8
F_ME30	130^{H7}	165	38	62	150	26	86	5.5	4.5	M10
F_ME40	180^{H7}	215	48	82	204	35	123	5.5	5.5	M12

In the table above, you will find example dimensions for the motor connection for the ME motor adapter. **Note that when dimension c is lengthened (depending on the motor used), dimensions c6, l5 and lg are also lengthened accordingly.**

You will find additional motor connection dimensions for the ME motor adapter in our STOBER Configurator at http://configurator.stoeber.de. Here, you can directly download a 3D model of your drive.

8.3.10 S shaft design (hollow shaft with shrink ring), Q housing design (square flange)

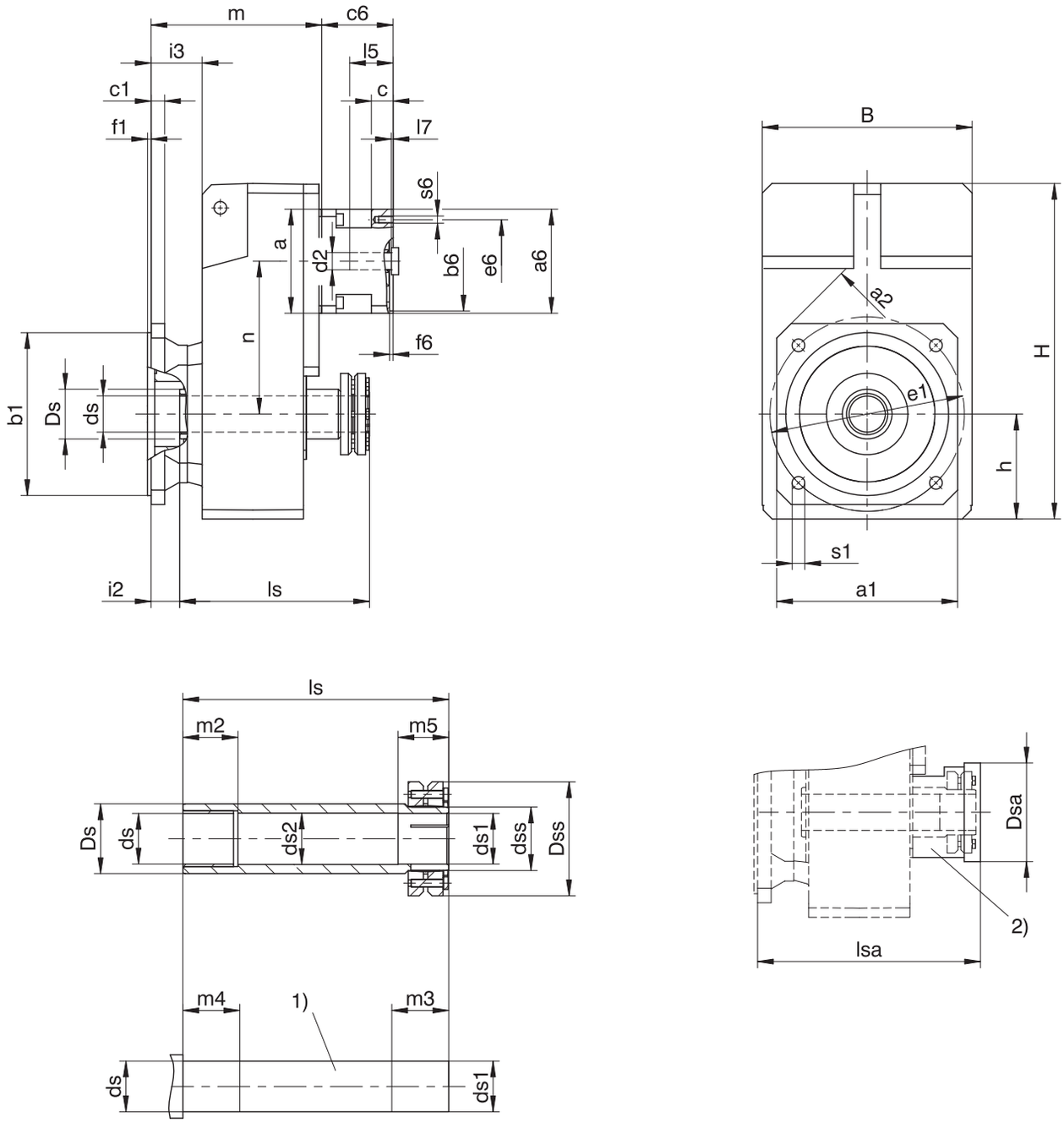

1) Machine shaft: The dimension ls must meet or exceed the specified value.

2) Cover (optional)

Dimensions of gear units

Type	□a1	□a2	Øb1	B	c1	Øds	Øds1	Øds2	Ødss	ØDs	ØDsa	ØDss	Øe1	f1	h	H	i2	i3	ls	lsa	m2	m3	m4	m5	Øs1
F1	125	160	110_{j6}	145	10	20_{h9}	20_{h9}^{H7}	20.5	24	35	63	50	130	3.5	74	238.0	25.5	44.5	146	150	20	31	25	26	9
F2	150	195	130_{j6}	180	14	25_{h9}	25_{h9}^{H7}	25.5	30	45	73	60	165	3.5	93	299.0	30.0	53.0	175	180	20	37	25	32	11
F3	200	260	180_{j6}	206	15	30_{h9}	30_{h9}^{H7}	30.5	36	50	83	72	215	4.0	106	335.5	31.5	56.5	192	196	25	37	30	32	14
F4	200	260	180_{j6}	230	15	40_{h9}	40_{h9}^{H7}	40.5	50	55	108	90	215	4.0	116	370.0	31.5	56.5	210	215	40	45	45	40	14
F6	250	325	230_{j6}	265	17	50_{h9}	50_{h9}^{H7}	50.5	62	70	128	106	265	4.0	137	433.0	29.5	60.5	248	251	40	47	45	42	14

Type	ME10			ME20			ME30			ME40		
	a	m	n	a	m	n	a	m	n	a	m	n
F102	□98	129.5	102.0	□115	133.5	102.0	–	–	–	–	–	–
F202	□98	153.0	131.0	□115	157.0	131.0	□145	159.0	131.0	–	–	–
F203	∅140	190.0	131.0	–	–	–	–	–	–	–	–	–
F302	∅140	169.5	149.5	□115	173.5	149.5	□145	175.5	149.5	–	–	–
F303	∅140	206.5	149.5	∅160	216.5	113.0	–	–	–	–	–	–
F402	–	–	–	∅160	188.5	169.0	□145	190.5	169.0	□190	193.5	169.0
F403	∅140	221.5	169.0	∅160	231.5	132.0	–	–	–	–	–	–
F602	–	–	–	∅160	219.5	196.0	□145	221.5	196.0	□190	224.5	196.0
F603	–	–	–	∅160	262.5	196.0	–	–	–	–	–	–

Example dimensions for the motor connection

Type	∅b6	∅e6	∅d2max	l5	□a6	c	c6	f6	l7	s6
F_ME10	95^{H7}	115	19	41	100	21	61	4.0	3.0	M8
F_ME20	110^{H7}	130	32	53	120	24	74	4.0	3.5	M8
F_ME30	130^{H7}	165	38	62	150	26	86	5.5	4.5	M10
F_ME40	180^{H7}	215	48	82	204	35	123	5.5	5.5	M12

In the table above, you will find example dimensions for the motor connection for the ME motor adapter. **Note that when dimension c is lengthened (depending on the motor used), dimensions c6, l5 and lg are also lengthened accordingly.**

You will find additional motor connection dimensions for the ME motor adapter in our STOBER Configurator at http://configurator.stoeber.de. Here, you can directly download a 3D model of your drive.

8.4 Type designation

This chapter shows you an explanation of the type designation with the associated options.

Additional ordering information not included in the type designation can be found at the end of the chapter.

Example code

F	2	0	2	A	G	0700	ME20

Explanation

Code	Designation	Design
F	Type	Offset helical gear unit
2	Size	2 (example)
0	Generation	Generation 0
2	Stages	Two-stage
3		Three-stage
A	Shaft	Hollow shaft with keyway
S		Hollow shaft with shrink ring
V		Solid shaft
G	Housing	Pitch circle diameter
F		Round flange
Q		Square flange
GN		Pitch circle diameter + side fastening
/0700	Transmission ratio (i x 10 rounded)	i = 70.13 (example)
ME20	Motor adapter	ME20 motor adapter (example) with EasyAdapt coupling
MQ		Square motor adapter with backlash-free plug-in coupling
MB[1]		ServoStop motor adapter with brake

In order to complete the type designation, also specify:

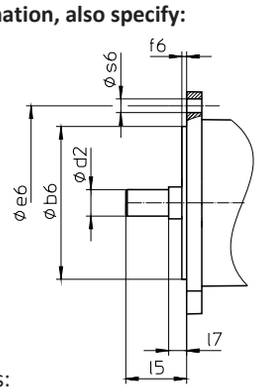

- Motor type or motor dimensions:

  To choose a suitable motor connection, use the STOBER Configurator at http://configurator.stoeber.de and choose your motor or the dimensions of the motor connection.
- For the mounting position, see the chapter [▸ 8.5.7]
- Position of locking screw access, see the chapter [▸ 8.5.9]
- F102, F202, F302, F402, F602: Pinion lock for motor adapter (optional)
- Double seal for ME motor adapter (optional)

[1] You can find more details in the catalog for ServoStop servo gear unit with brake ID 443234.

8.4.1 Nameplate

An example gear unit nameplate is explained in the figure below.

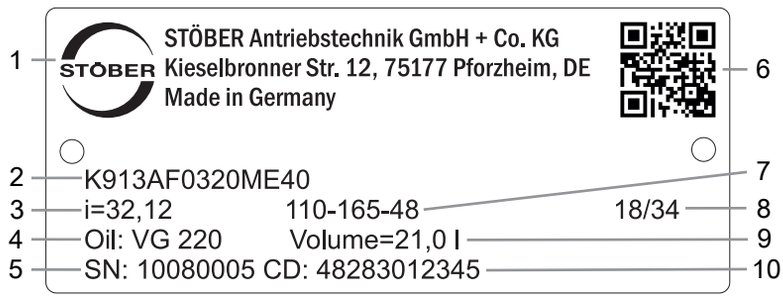

Code	Designation
1	Name of manufacturer
2	Type designation
3	Gear ratio of the gear unit
4	Lubricant specification
5	Serial number of the gear unit
6	QR code (link to product information)
7	Dimensions of the motor adapter (pilot/bolt circle/motor shaft diameter)
8	Date of manufacture (year/calendar week)
9	Lubricant fill volume
10	Customer-specific data

8.4.1.1 Supporting documents

You can view or download supporting documents for the product by reading off the serial number on the nameplate of the product and entering it at the following address online:
https://id.stober.com

Alternatively, you can use a suitable mobile device to scan in the QR code on the nameplate of the product in order to be linked to the supporting documents.

8.5 Product description

8.5.1 Input options

ME motor adapter for attaching synchronous servo motors

http://www.stoeber.de/en/FME

MB motor adapter with brake for attaching synchronous servo motors

http://www.stoeber.de/en/FMB

MR motor adapter for attaching asynchronous motors

http://www.stoeber.de/en/FMR

EZ synchronous servo motor

http://www.stoeber.de/en/FEZ

LM Lean motor

http://www.stoeber.de/en/FLM

8.5.2 Motor adapter with EasyAdapt coupling (ME)

In this chapter, you will find a description of the EasyAdapt coupling.

Properties:

- Fast and easy motor attachment
- Rugged clamp coupling with expanding function
- Lowest mass moments of inertia for the highest dynamics
- Balanced for smooth running without vibration, even at high speeds
- Large motor shaft diameter range
- Error-free, thanks to exact centering of the motor

Fig. 1: EasyAdapt coupling

8.5.3 Square motor adapter with backlash-free plug-in coupling (MQ)

In this chapter, you will find a description of the backlash-free plug-in coupling (jaw coupling).

Properties:

- Fast and easy motor attachment
- Removal of the motor possible in any position
- With integrated thermal length compensation, compensates for linear expansion of the motor shaft
- Motor shaft decoupled from axial forces
- Balanced for smooth running without vibration, even at high speeds
- Large motor shaft diameter range
- Error-free, thanks to exact centering of the motor

Fig. 2: Backlash-free plug-in coupling

For all technical data and combinations with our gear units, refer to http://configurator.stoeber.de.

8.5.4 Housing design

Pitch circle diameter G	Round flange F
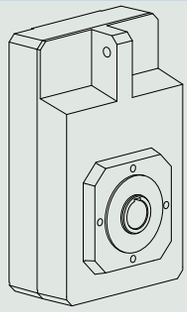	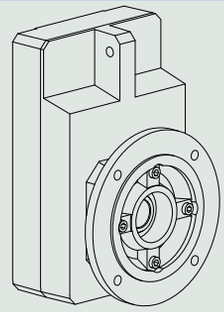
Square flange Q	**Pitch circle diameter + side fastening GN**
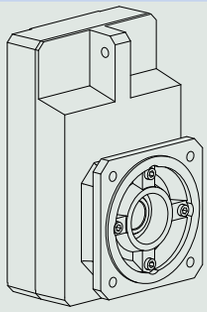	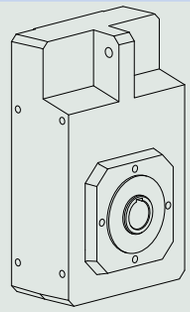

	G	F	Q	GN
F1	✓	✓	✓	✓
F2	✓	✓	✓	✓
F3	✓	✓	✓	✓
F4	✓	✓	✓	✓
F6	✓	✓	✓	✓

8.5.5 Combinatorial shaft/housing design

	Housing design				
Shaft design	**Code**	**G**	**F**	**Q**	**GN**
Hollow shaft with keyway	**A**	AG	AF	AQ	AGN
Hollow shaft with shrink ring	**S**	SG	SF	SQ	SGN
Solid shaft	**V**	–	VF	VQ	–

8.5.6 Installation conditions

Hollow shaft

The hollow shaft hole tolerance is ISO H7. The tolerance of the machine shaft must be ISO k6.

Take care to align the machine shaft with the gear unit hollow shaft when attaching the gear unit.

Maximum deviation ≤ 0.03 mm.

For simpler assembly and disassembly of the machine shaft, the hollow shafts are equipped with a spiral groove (as a grease deposit).

A hardened, threaded keeper plate is included in the scope of delivery. You also have the option to order the hollow shaft without a keeper plate.

Hollow shaft with shrink ring

The tolerance of the hollow shaft hole is ISO H7.

The machine shaft must be ISO h9.

Select a material for the machine shaft with a permitted surface pressure of $p \geq 325\ N/mm^2$.

Possible materials:

- C45E +QT
- 42CrMo4

Fastening the gear units on the machine side using the pitch circle diameter

The specified torques and forces only apply when gear units are fastened on the machine side using screws of strength class 10.9. In addition, the gear housings must be adjusted at the pilot. The machine-side fit must be H7.

8.5.7 Mounting positions

The following table shows the standard mounting positions.

The numbers identify the gear unit sides. The mounting position is defined by the gear side facing downwards.

EL1	EL2	EL3
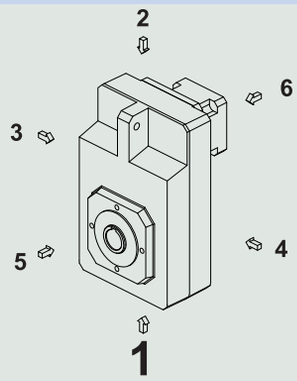	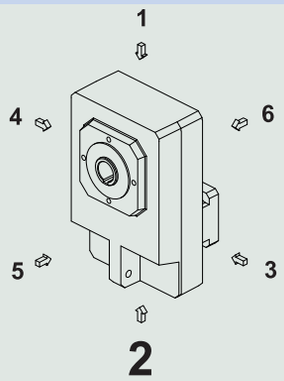	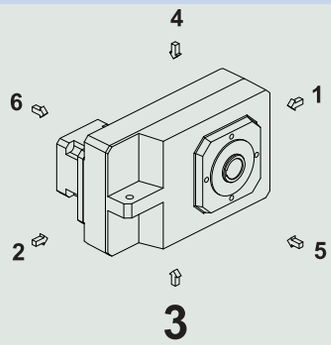
EL4	**EL5**	**EL6**
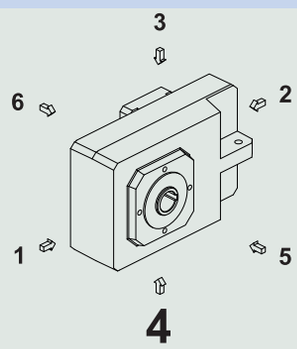	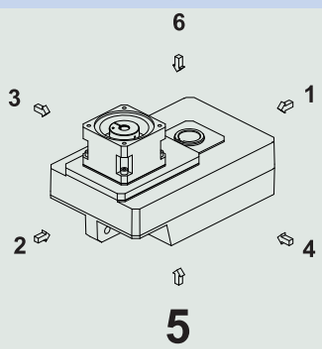	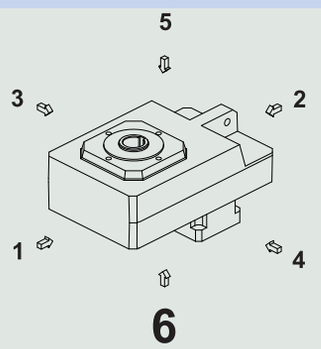

Since the lubricant filling volume of the gear unit depends on the mounting position, the mounting position must be specified when ordering.

8.5.8 Lubricants

STOBER fills the gear units with the amount and type of lubricant specified on the nameplate. The filling volume and the structure of the gear units depend on the mounting position.

Only install the gear units in the intended mounting position! Reposition the gear units only after consulting STOBER. Otherwise, STOBER assumes no liability for the gear units.

You will receive lubricants for use in the food industry upon request.

8.5.9 Position of locking screw access

Mounting position EL1 Locking screw in 270° position (standard)	Mounting position EL4 Locking screw in 270° position (standard)
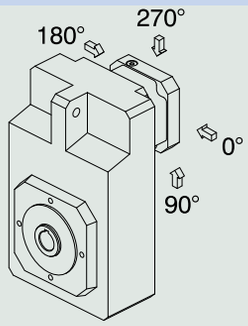	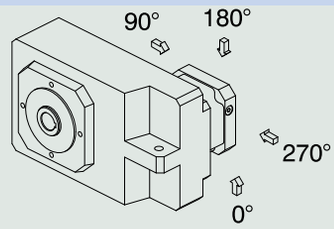

Indicate variations for your gear unit in the order.

Note that the access hole for the locking screw also rotates when the gear unit is rotated to another mounting position.

8.5.10 Other product features

Feature	Value
Max. permitted gear unit temperature (on the surface of the gear unit)	≤ 80 °C
Paint	Black RAL 9005
Explosion-proof design in accordance with (ATEX) Directive 2014/34/EU (optional)	Available, see Document ID 441677_en
Efficiency: η_{get} two-stage η_{get} three-stage	 97% 96%
Protection class: [2]	IP65

8.5.11 Direction of rotation

Solid shaft (V), hollow shaft with keyway (A), hollow shaft with shrink ring (S)

F102 – F602	F203 – F603
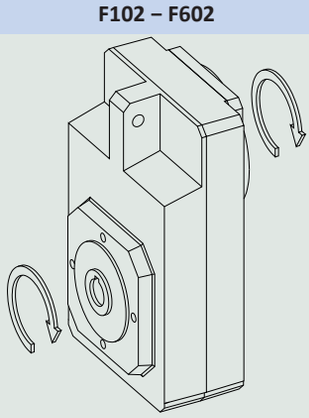	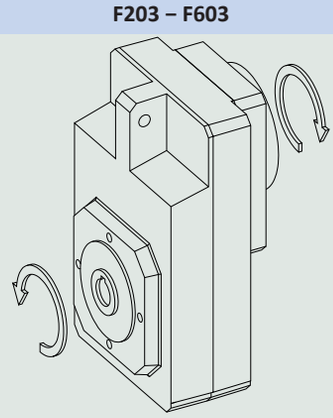
The input and output rotate in the same direction.	The input and output rotate in opposite directions.

The pictures show mounting position EL1.

8.6 Project configuration

Project your drives using our SERVOsoft designing software. Download SERVOsoft for free at https://www.stoeber.de/en/ServoSoft.

Observe the limit conditions in this chapter to ensure a safe design for your drives.

An explanation of the formula symbols can be found in the chapter [▸ 18.1].

[2] Observe the protection class of all the components.

8.6.1 Drive selection

The formula symbols for values actually present in the application are marked with *.

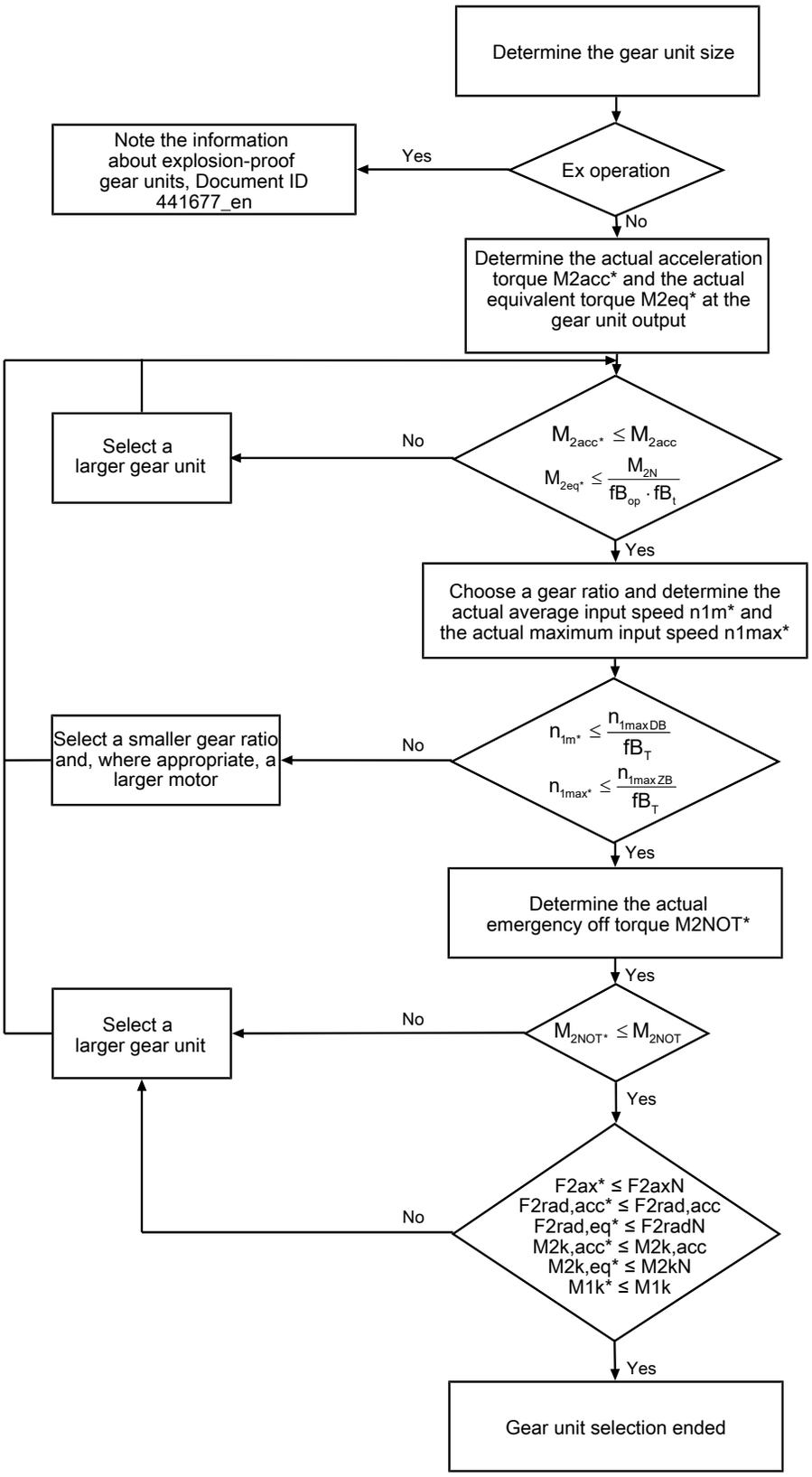

Calculate the forces and tilting torques in the chapter Permitted shaft loads.

The values for i, n_{1maxDB}, n_{1maxZB}, M_{2acc}, M_{2NOT} and M_{2N} can be found in the selection tables.

The values for fB_T, fB_{op} and fB_t can be found in the corresponding tables in this chapter.

Example of cyclic operation

The following calculations are based on a representation of the power taken from the output based in accordance with the following example:

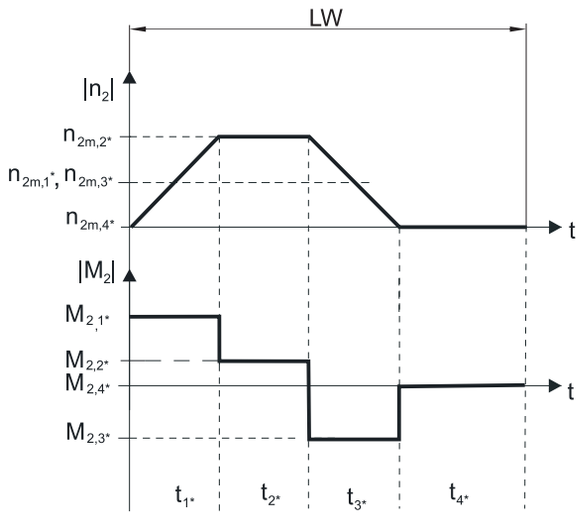

Calculation of the actual maximum acceleration torque

$$M_{2acc*} = J_{tot} \cdot \frac{\Delta n_2}{9.55 \cdot \Delta t} + M_{L*}$$

Calculation of the actual average input speed

$$n_{1m*} = n_{2m*} \cdot i$$

$$n_{2m*} = \frac{\left|n_{2m,1*}\right| \cdot t_{1*} + \ldots + \left|n_{2m,n*}\right| \cdot t_{n*}}{t_{1*} + \ldots + t_{n*}}$$

If $t_{1*} + \ldots + t_{3*} \geq 6$ min, calculate n_{2m*} without the rest phase t_{4*}.

The values for the ratio i can be found in the selection tables.

Calculation of the actual emergency-off torque

$$M_{2NOT*} = J_{tot} \cdot \frac{\Delta n_2}{9.55 \cdot \Delta t} + M_{L*}$$

Calculation of the actual equivalent torque

$$M_{2eq*} = \sqrt[3]{\frac{\left|n_{2m,1*}\right| \cdot t_{1*} \cdot \left|M_{2,1*}{}^3\right| + \ldots + \left|n_{2m,n*}\right| \cdot t_{n*} \cdot \left|M_{2,n*}{}^3\right|}{\left|n_{2m,1*}\right| \cdot t_{1*} + \ldots + \left|n_{2m,n*}\right| \cdot t_{n*}}}$$

Operating factors

Operating mode	fB_{op}
Uniform continuous operation	1.00
Cyclic operation	1.25
Reversing load cyclic operation	1.40

Run time	fB_t
Daily runtime ≤ 8 h	1.00
Daily runtime ≤ 16 h	1.15
Daily runtime ≤ 24 h	1.20

Temperature		fB_T
Motor cooling	**Surrounding temperature**	
Motor with forced ventilation	≤ 20 °C	0.9
	≤ 30 °C	1.0
	≤ 40 °C	1.15
Motor with convection cooling	≤ 20 °C	1.0
	≤ 30 °C	1.1
	≤ 40 °C	1.25

Notes

- The maximum permitted gear unit temperature of ≤ 80 °C must not be exceeded. Doing so may result in damage to the gear unit.

8.6.2 Permitted shaft loads for the output shaft

The values specified in the tables apply to the permitted shaft loads:

- For shaft dimensions in accordance with the catalog
- For output speeds n_{2m*} ≤ 20 rpm ($F_{2axN} = F_{2ax20}$; $F_{2radN} = F_{2rad20}$; $M_{2kN} = M_{2k20}$)
- Only if radial forces on the gear unit are stabilized by its pilots for the pitch circle diameter and flange housing design

8.6.2.1 V shaft design

Permitted shaft loads for V shaft design (solid shaft)

Type	z_2 [mm]	F_{2ax20} [N]	F_{2rad20} [N]	$F_{2rad,acc}$ [N]	M_{2k20} [Nm]	$M_{2k,acc}$ [Nm]
F1	35.0	1100	4200	4200	260	260
F2	41.0	1400	5400	5400	400	400
F3	43.0	1900	7500	7500	600	600
F4	44.0	2350	9250	9250	800	800
F6	44.0	3100	12500	12500	1200	1200

For other output speeds, download diagrams at http://configurator.stoeber.de.

The following applies to output speeds n_{2m*} > 20 rpm:

$$F_{2axN} = \frac{F_{2ax20}}{\sqrt[3]{\frac{n_{2m*}}{20\ \text{rpm}}}} \qquad F_{2radN} = \frac{F_{2rad20}}{\sqrt[3]{\frac{n_{2m*}}{20\ \text{rpm}}}} \qquad M_{2kN} = \frac{M_{2k20}}{\sqrt[3]{\frac{n_{2m*}}{20\ \text{rpm}}}}$$

The values for F_{2ax20}, F_{2rad20} and M_{2k20} can be found in the table "Permitted shaft loads" in this chapter.

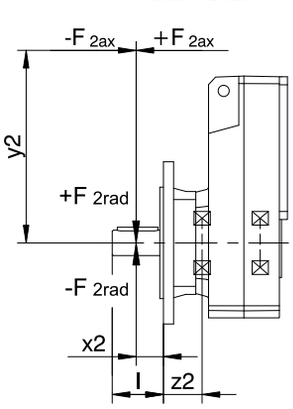

Fig. 3: Force application points for solid shaft

The specified values for F_{2rad20} are based on application of force at the middle of the output shaft: $x_2 = l/2$.

Shaft dimensions can be found in the "Dimensional drawings" chapter.

The following applies to other force application points:

$$M_{2k*} = \frac{2 \cdot F_{2ax*} \cdot y_2 + F_{2rad*} \cdot (x_2 + z_2)}{1000} \leq M_{2kN}$$

$$F_{2rad*} \leq F_{2radN}$$

$$F_{2ax*} \leq F_{2axN}$$

For applications with multiple axial and/or radial forces, you must add the forces as vectors.

In the event of EMERGENCY OFF operation (max. 1000 load changes), you can multiply the permitted forces and torques for F_{2ax20}, F_{2rad20} and M_{2k20} by a factor of two.

8.6.2.2 A and S shaft design

Permitted shaft loads for A shaft design (hollow shaft with keyway)

Type	z_2 [mm]	F_{2ax20} [N]	F_{2rad20} [N]	$F_{2rad,acc}$ [N]	M_{2k20} [Nm]	$M_{2k,acc}$ [Nm]
F1	30.0	900	4200	4200	175	175
F2	33.0	1200	5400	5400	250	250
F3	33.0	1350	7500	7500	375	375
F4	39.0	1900	9250	9250	550	550
F6	45.0	2200	12500	12500	800	800

Permitted shaft loads for S shaft design (hollow shaft with shrink ring)

Type	z_2 [mm]	F_{2ax20} [N]	F_{2rad20} [N]	$F_{2rad,acc}$ [N]	M_{2k20} [Nm]	$M_{2k,acc}$ [Nm]
F1	30.0	900	4200	4200	175	175
F2	33.0	1200	5400	5400	250	250
F3	33.0	1350	7500	7500	375	375
F4	39.0	1900	9250	9250	550	550
F6	45.0	2200	12500	12500	800	800

For other output speeds, download diagrams at http://configurator.stoeber.de.

The following applies to output speeds n_{2m*} > 20 rpm:

$$F_{2axN} = \frac{F_{2ax20}}{\sqrt[3]{\frac{n_{2m*}}{20\ \text{rpm}}}} \qquad F_{2radN} = \frac{F_{2rad20}}{\sqrt[3]{\frac{n_{2m*}}{20\ \text{rpm}}}} \qquad M_{2kN} = \frac{M_{2k20}}{\sqrt[3]{\frac{n_{2m*}}{20\ \text{rpm}}}}$$

The values for F_{2ax20}, F_{2rad20} and M_{2k20} can be found in the table "Permitted shaft loads" in this chapter.

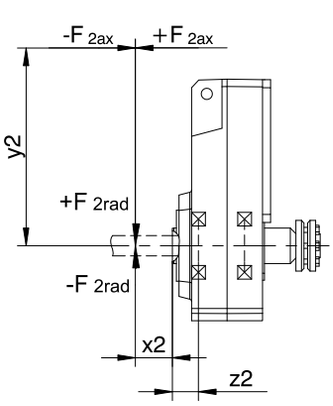

Fig. 4: Force application points for hollow shaft

You can determine the permitted radial forces from the permitted breakdown torque M_{2kN}. The actual radial forces may not exceed the permitted radial forces. The permitted radial forces pertain to the shaft end (x2 = 0).

$$M_{2k*} = \frac{2 \cdot F_{2ax*} \cdot y_2 + F_{2rad*} \cdot (x_2 + z_2)}{1000} \leq M_{2kN}$$

$$F_{2ax*} \leq F_{2axN}$$

For applications with multiple axial and/or radial forces, you must add the forces as vectors.

In the event of EMERGENCY OFF operation (max. 1000 load changes), you can multiply the permitted forces and torques for F_{2ax20}, F_{2rad20} and M_{2k20} by a factor of two.

8.6.3 Permitted breakdown torques at the gear unit input

For a horizontal mounting position of the motor, verify that the permitted breakdown torque at the gear unit input is not exceeded before installation on a STOBER gear unit. You can find information for how to do that in this chapter.

Calculate the actual breakdown torque as follows:

$M_{1k*} = F_{1k*} \bullet l_{sp} \leq M_{1k}$

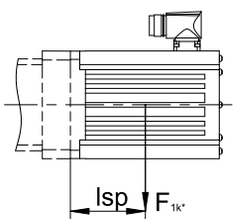

Type	M_{1k} [Nm]
ME10	25
ME20	60
ME30	125
ME40	250
ME50	600

8.6.4 Radial shaft seal rings

Leak-proofness

Our gear units are equipped with high-quality radial shaft seal rings and checked for leaks. However, a leak cannot be fully ruled out over the length of use of a gear unit. If you use a gear unit with goods incompatible with the lubricant, you must take measures to prevent direct contact with the gear unit lubricant in case of a leak.

8.7 Additional documentation

Additional documentation related to the product can be found at
http://www.stoeber.de/en/downloads/

Enter the ID of the documentation in the Search... field.

Documentation	ID
Operating manual for C/F/K/S gear units and gear motors	443027_en
Operating manual for explosion-proof C/F/K/S gear units	443028_en
Information explosion-proof gear units	441677_en

9 KS right-angle servo gear units

Table of contents

9.1 Overview ... 176

9.2 Selection tables ... 177

9.3 Dimensional drawings ... 179

9.3.1 F shaft design (flange hollow shaft) ... 180

9.3.2 S shaft design (hollow shaft with shrink ring) ... 182

9.3.3 G shaft design (solid shaft without feather key) ... 184

9.3.4 P shaft design (solid shaft with feather key) ... 185

9.3.5 Oil expansion tank ... 186

9.4 Type designation ... 187

9.4.1 Nameplate ... 188

9.5 Product description ... 188

9.5.1 Input options ... 188

9.5.2 Motor adapter with EasyAdapt coupling (ME/MEL) ... 189

9.5.3 Installation conditions ... 189

9.5.4 Mounting positions ... 190

9.5.5 Lubricants ... 190

9.5.6 Position of locking screw access ... 191

9.5.7 Other product features ... 191

9.5.8 Direction of rotation ... 191

9.6 Project configuration ... 191

9.6.1 Drive selection ... 192

9.6.2 Permitted shaft loads for the output shaft ... 194

9.6.3 Torsional stiffness ... 198

9.6.4 Permitted breakdown torques at the gear unit input ... 198

9.6.5 Recommendation for radial shaft seal rings ... 198

9.6.6 Oil expansion tank ... 199

9.7 Additional documentation ... 199

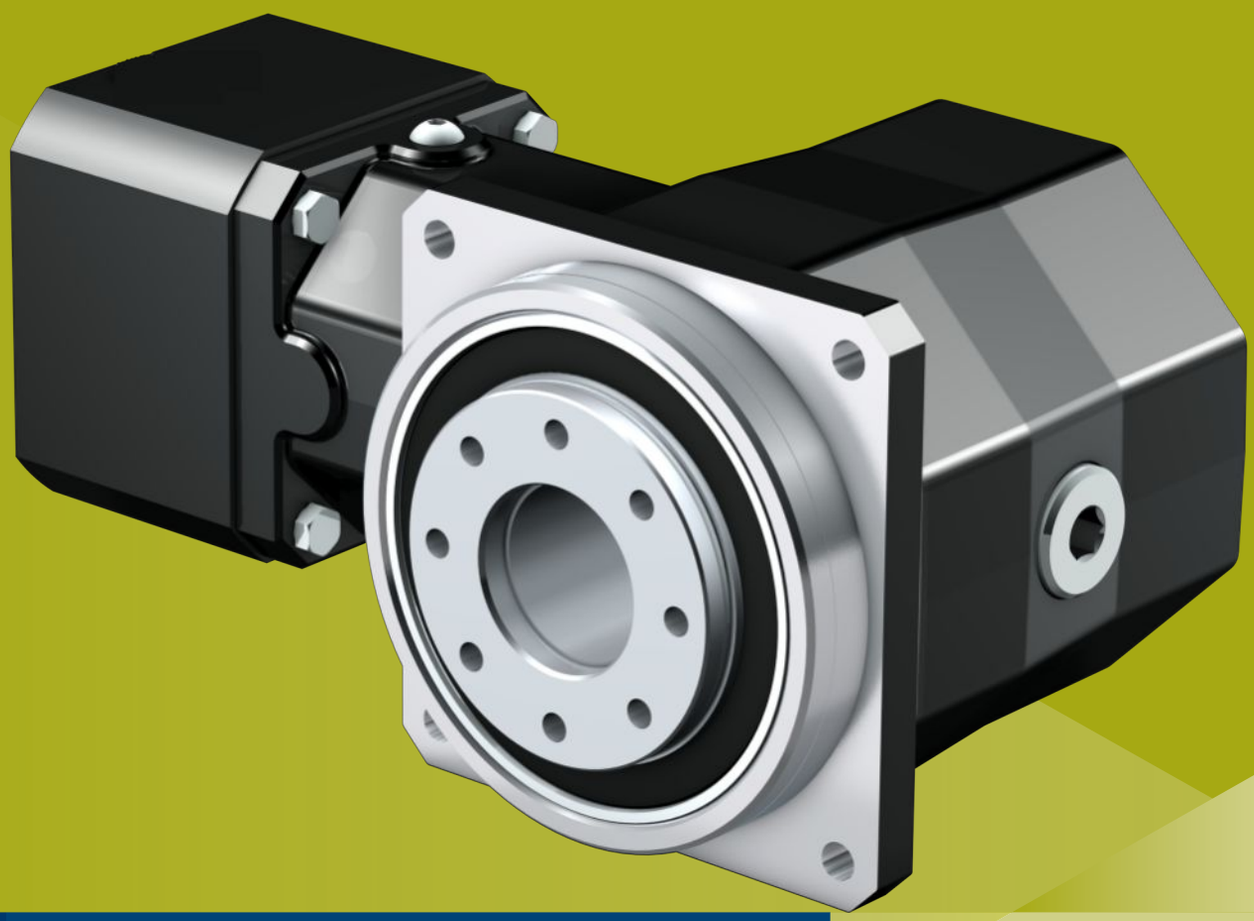

9 KS right-angle servo gear units

9.1 Overview

Precision right-angle servo gear units

Features

Power density	★★★☆☆
Backlash	★★★☆☆
Price category	€€€
Shaft load	★★★★★
Smooth operation	★★★★☆
Torsional stiffness	★★★☆☆
Mass moment of inertia	★★★★☆
Helical gearing	✓
Maintenance-free	✓
FKM seal ring at the input	✓
Stiff output bearings due to pretension	✓
Easy and reliable attachment to any synchronous servo motor	✓

Key ★☆☆☆☆ good | ★★★★★ excellent
€ Economy | €€€€€ Premium

Technical data

i	6 – 200
M_{2acc}	90 – 400 Nm
$\Delta\phi_2$	4 – 6 arcmin
η_{get}	93 – 95 %

9.2 Selection tables

The technical data specified in the selection tables applies to:

- Installation altitudes up to 1000 m above sea level
- Surrounding temperatures from 0 °C to 40 °C
- Without consideration for thermal limiting performance

You can find the mass moment of inertia J_1 for smaller motor shaft diameters and all other technical data at http://configurator.stoeber.de.

An explanation of the formula symbols can be found in the chapter [▸ 18.1].

i	Type	n_{1MAXDB} [rpm]	n_{1MAXZB} [rpm]	d_{MW} [mm]	J_1 [kgcm²]	m [kg]	$\Delta\varphi_2$ [arcmin]	C_2 [Nm/arcmin]	L_{pA} [dB(A)]	M_{2N} [Nm]	M_{2acc} [Nm]	M_{2NOT} [Nm]
KS402 ($M_{2acc,max}$ = 90 Nm)												
6.000	KS402_0060 ME	3000	6000	≤19	1.1	7.7	6.0	8.1	63	60	90	140
6.000	KS402_0060 MEL	3000	6000	≤24	1.5	8.4	6.0	8.4	63	60	90	140
8.000	KS402_0080 ME	3500	6000	≤19	0.71	7.7	6.0	8.3	60	65	90	140
8.000	KS402_0080 MEL	3500	6000	≤24	1.2	8.4	6.0	8.4	60	65	90	140
10.00	KS402_0100 ME	3800	6000	≤19	0.58	7.7	6.0	8.3	58	65	90	140
10.00	KS402_0100 MEL	3800	6000	≤24	1.1	8.4	6.0	8.4	58	65	90	140
14.00	KS402_0140 ME	4000	6000	≤19	0.47	7.7	6.0	8.4	57	65	90	140
14.00	KS402_0140 MEL	4000	6000	≤24	0.96	8.4	6.0	8.5	57	65	90	140
20.00	KS402_0200 ME	4000	6000	≤19	0.43	7.7	6.0	8.5	55	60	90	140
20.00	KS402_0200 MEL	4000	6000	≤24	0.91	8.4	6.0	8.5	55	60	90	140
KS403 ($M_{2acc,max}$ = 90 Nm)												
24.00	KS403_0240 ME	3500	6000	≤14	0.20	7.8	6.0	8.5	59	60	90	140
24.00	KS403_0240 MEL	3500	6000	≤19	0.48	8.2	6.0	8.5	59	60	90	140
32.00	KS403_0320 ME	3500	6000	≤14	0.17	7.8	6.0	8.5	59	65	90	140
32.00	KS403_0320 MEL	3500	6000	≤19	0.46	8.2	6.0	8.5	59	65	90	140
40.00	KS403_0400 ME	3500	6000	≤14	0.17	7.8	6.0	8.5	59	65	90	140
40.00	KS403_0400 MEL	3500	6000	≤19	0.45	8.2	6.0	8.5	59	65	90	140
50.00	KS403_0500 ME	4000	6000	≤14	0.13	7.8	6.0	8.5	57	65	90	140
50.00	KS403_0500 MEL	4000	6000	≤19	0.42	8.2	6.0	8.5	57	65	90	140
70.00	KS403_0700 ME	4500	6000	≤14	0.11	7.8	6.0	8.5	56	65	90	140
70.00	KS403_0700 MEL	4500	6000	≤19	0.40	8.2	6.0	8.5	56	65	90	140
80.00	KS403_0800 ME	4500	6000	≤14	0.10	7.8	6.0	8.5	54	65	90	140
80.00	KS403_0800 MEL	4500	6000	≤19	0.40	8.2	6.0	8.5	54	65	90	140
100.0	KS403_1000 ME	4500	6000	≤14	0.10	7.8	6.0	8.5	54	65	90	140
100.0	KS403_1000 MEL	4500	6000	≤19	0.40	8.2	6.0	8.5	54	65	90	140
140.0	KS403_1400 ME	4500	6000	≤14	0.10	7.8	6.0	8.5	54	65	90	140
140.0	KS403_1400 MEL	4500	6000	≤19	0.39	8.2	6.0	8.5	54	65	90	140
200.0	KS403_2000 ME	4500	6000	≤14	0.10	7.8	6.0	8.5	54	60	90	140
200.0	KS403_2000 MEL	4500	6000	≤19	0.39	8.2	6.0	8.5	54	60	90	140
KS502 ($M_{2acc,max}$ = 200 Nm)												
6.000	KS502_0060 ME	2500	5500	≤24	2.5	13	5.0	16	64	100	200	300
6.000	KS502_0060 MEL	2500	5500	≤32	4.1	14	5.0	17	64	100	200	300
8.000	KS502_0080 ME	2800	6000	≤24	1.9	13	5.0	17	61	125	200	300
8.000	KS502_0080 MEL	2800	6000	≤32	3.5	14	5.0	17	61	125	200	300
10.00	KS502_0100 ME	3000	6000	≤24	1.5	13	5.0	17	59	125	200	300
10.00	KS502_0100 MEL	3000	6000	≤32	3.1	14	5.0	17	59	125	200	300
14.00	KS502_0140 ME	3200	6000	≤24	1.1	13	5.0	17	58	125	200	300
14.00	KS502_0140 MEL	3200	6000	≤32	2.8	14	5.0	17	58	125	200	300
20.00	KS502_0200 ME	3500	6000	≤24	0.96	13	5.0	17	56	120	200	300
20.00	KS502_0200 MEL	3500	6000	≤32	2.6	14	5.0	17	56	120	200	300
KS503 ($M_{2acc,max}$ = 200 Nm)												
24.00	KS503_0240 ME	3100	6000	≤19	0.64	14	5.0	17	60	100	200	300
24.00	KS503_0240 MEL	3100	6000	≤24	1.1	14	5.0	17	60	100	200	300
32.00	KS503_0320 ME	3100	6000	≤19	0.60	14	5.0	17	60	125	200	300
32.00	KS503_0320 MEL	3100	6000	≤24	1.1	14	5.0	17	60	125	200	300
40.00	KS503_0400 ME	3100	6000	≤19	0.58	14	5.0	17	60	125	200	300
40.00	KS503_0400 MEL	3100	6000	≤24	1.1	14	5.0	17	60	125	200	300
50.00	KS503_0500 ME	3500	6000	≤19	0.50	14	5.0	17	58	125	200	300
50.00	KS503_0500 MEL	3500	6000	≤24	0.98	14	5.0	17	58	125	200	300
70.00	KS503_0700 ME	4200	6000	≤19	0.43	14	5.0	17	57	125	200	300
70.00	KS503_0700 MEL	4200	6000	≤24	0.92	14	5.0	17	57	125	200	300
80.00	KS503_0800 ME	4200	6000	≤19	0.41	14	5.0	17	55	125	200	300
80.00	KS503_0800 MEL	4200	6000	≤24	0.90	14	5.0	17	55	125	200	300
100.0	KS503_1000 ME	4200	6000	≤19	0.40	14	5.0	17	55	125	200	300

i	Type	n_{1MAXDB} [rpm]	n_{1MAXZB} [rpm]	d_{MW} [mm]	J_1 [kgcm²]	m [kg]	$\Delta\varphi_2$ [arcmin]	C_2 [Nm/arcmin]	L_{pA} [dB(A)]	M_{2N} [Nm]	M_{2acc} [Nm]	M_{2NOT} [Nm]
KS503 ($M_{2acc,max}$ = 200 Nm)												
100.0	KS503_1000 MEL	4200	6000	≤24	0.89	14	5.0	17	55	125	200	300
140.0	KS503_1400 ME	4200	6000	≤19	0.40	14	5.0	17	55	125	200	300
140.0	KS503_1400 MEL	4200	6000	≤24	0.89	14	5.0	17	55	125	200	300
200.0	KS503_2000 ME	4200	6000	≤19	0.40	14	5.0	17	55	120	200	300
200.0	KS503_2000 MEL	4200	6000	≤24	0.89	14	5.0	17	55	120	200	300
KS702 ($M_{2acc,max}$ = 400 Nm)												
6.000	KS702_0060 ME	2100	4500	≤32	8.3	25	4.0	40	65	240	400	600
6.000	KS702_0060 MEL	2100	4500	≤38	12	27	4.0	41	65	240	400	600
8.000	KS702_0080 ME	2500	5000	≤32	5.5	25	4.0	41	62	250	400	600
8.000	KS702_0080 MEL	2500	5000	≤38	9.2	27	4.0	41	62	250	400	600
10.00	KS702_0100 ME	2800	6000	≤32	4.4	25	4.0	41	60	250	400	600
10.00	KS702_0100 MEL	2800	6000	≤38	8.2	27	4.0	42	60	250	400	600
14.00	KS702_0140 ME	3000	6000	≤32	3.4	25	4.0	42	59	250	400	600
14.00	KS702_0140 MEL	3000	6000	≤38	7.1	27	4.0	42	59	250	400	600
20.00	KS702_0200 ME	3200	6000	≤32	2.9	25	4.0	42	57	250	400	600
20.00	KS702_0200 MEL	3200	6000	≤38	6.7	27	4.0	42	57	250	400	600
KS703 ($M_{2acc,max}$ = 400 Nm)												
24.00	KS703_0240 ME	3000	6000	≤24	1.6	27	4.0	42	61	240	400	600
24.00	KS703_0240 MEL	3000	6000	≤32	3.2	28	4.0	42	61	240	400	600
32.00	KS703_0320 ME	3000	6000	≤24	1.5	27	4.0	42	61	250	400	600
32.00	KS703_0320 MEL	3000	6000	≤32	3.1	28	4.0	42	61	250	400	600
40.00	KS703_0400 ME	3000	6000	≤24	1.4	27	4.0	42	61	250	400	600
40.00	KS703_0400 MEL	3000	6000	≤32	3.0	28	4.0	42	61	250	400	600
50.00	KS703_0500 ME	3200	6000	≤24	1.2	27	4.0	42	59	250	400	600
50.00	KS703_0500 MEL	3200	6000	≤32	2.8	28	4.0	42	59	250	400	600
70.00	KS703_0700 ME	3500	6000	≤24	0.98	27	4.0	42	58	250	400	600
70.00	KS703_0700 MEL	3500	6000	≤32	2.6	28	4.0	42	58	250	400	600
80.00	KS703_0800 ME	4000	6000	≤24	0.93	27	4.0	42	56	250	400	600
80.00	KS703_0800 MEL	4000	6000	≤32	2.6	28	4.0	42	56	250	400	600
100.0	KS703_1000 ME	4000	6000	≤24	0.92	27	4.0	42	56	250	400	600
100.0	KS703_1000 MEL	4000	6000	≤32	2.6	28	4.0	42	56	250	400	600
140.0	KS703_1400 ME	4000	6000	≤24	0.91	27	4.0	42	56	250	400	600
140.0	KS703_1400 MEL	4000	6000	≤32	2.5	28	4.0	42	56	250	400	600
200.0	KS703_2000 ME	4000	6000	≤24	0.90	27	4.0	42	56	250	400	600
200.0	KS703_2000 MEL	4000	6000	≤32	2.5	28	4.0	42	56	250	400	600

9.3 Dimensional drawings

In this chapter, you can find the dimensions of the gear units as well as example dimensions of the mountable motor adapters.

Dimensions can exceed the specifications of ISO 2768-mK due to casting tolerances or accumulation of individual tolerances.

We reserve the right to make dimensional changes due to ongoing technical development.

You can download 3D models of our standard drives at http://configurator.stoeber.de.

Tolerances

Solid shaft	Tolerance
Shaft ∅ fit ≤ 50 mm	DIN 748-1, ISO k6
Shaft ∅ fit > 50 mm	DIN 748-1, ISO m6
Feather keys	DIN 6885-1, high form A

Hollow shaft	Tolerance
Hollow shaft hole fit	ISO H7

Centering holes in solid shafts in accordance with DIN 332-2, DR shape

Thread size	M8	M12	M16
Thread depth	19	28	36

9.3.1 F shaft design (flange hollow shaft)

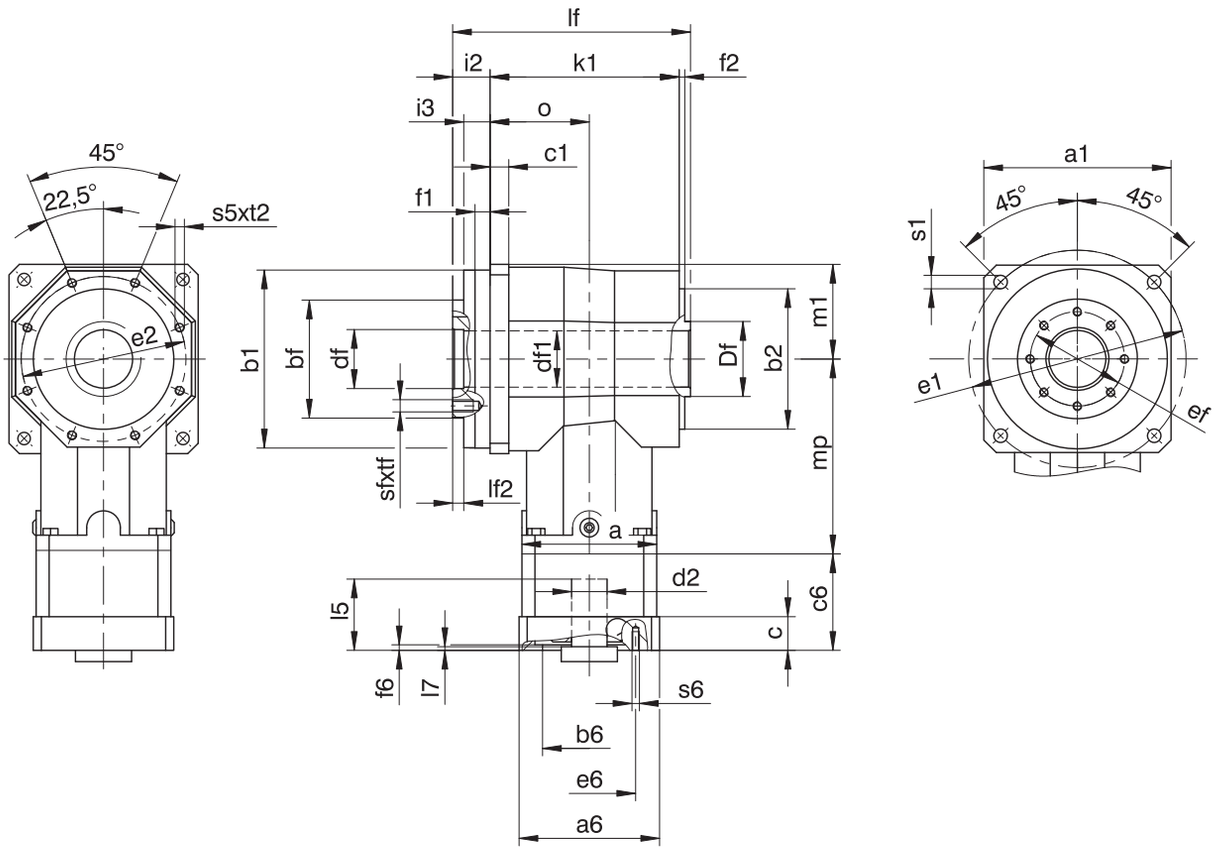

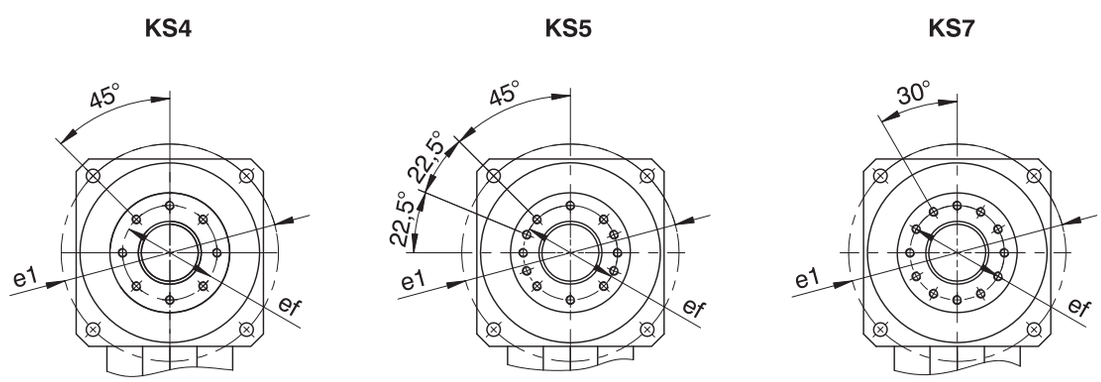

Dimensions of gear units

Type	□a1	Øb1	Øb2	bf	c1	Ødf	Ødf1	ØDf	Øe1	Øe2	ef	f1	f2	i2	i3	k1	lf	lf2	m1	mp	o	Øs1	s5	sf	t2	tf
KS402	101	95_{h6}	75_{h6}	63_{h7}	10	31.5^{H7}	30	40_{d9}	120	88	50	8	3	20	14.0	104	127	6.0	50.5	104	53	6.6	M5	M6	9	11
KS403	101	95_{h6}	75_{h6}	63_{h7}	10	31.5^{H7}	30	40_{d9}	120	88	50	8	3	20	14.0	104	127	6.0	50.5	184	53	6.6	M5	M6	9	11
KS502	125	120_{h6}	90_{h6}	80_{h7}	10	40.0^{H7}	38	48_{d9}	145	105	63	9	3	22	15.5	120	145	6.5	62.5	123	62	9.0	M6	M6	11	12
KS503	125	120_{h6}	90_{h6}	80_{h7}	10	40.0^{H7}	38	48_{d9}	145	105	63	9	3	22	15.5	120	145	6.5	62.5	221	62	9.0	M6	M6	11	12
KS702	155	150_{h6}	110_{h6}	100_{h7}	15	50.0^{H7}	49	60_{d9}	180	130	80	10	3	27	20.0	148	178	7.0	77.5	151	78	11.0	M8	M8	14	15
KS703	155	150_{h6}	110_{h6}	100_{h7}	15	50.0^{H7}	49	60_{d9}	180	130	80	10	3	27	20.0	148	178	7.0	77.5	260	78	11.0	M8	M8	14	15

Example dimensions for the motor connection

Type	Øb6	Øe6	Ød2max	l5	□a6	c	c6	f6	l7	s6
KS402_ME	60^{H7}	75	19	40	75	18	51.5	3.5	3.0	M5
KS403_ME	40^{H7}	63	14	30	55	15	32.0	3.5	3.0	M5
KS502_ME	95^{H7}	115	24	42	100	21	56.0	4.0	3.0	M8
KS503_ME	60^{H7}	75	19	40	75	18	51.5	3.5	3.0	M5
KS702_ME	110^{H7}	130	32	50	120	24	67.5	4.0	3.5	M8
KS703_ME	95^{H7}	115	24	42	100	21	56.0	4.0	3.0	M8

In the table above, you will find example dimensions for the motor connection for the ME motor adapter. **Note that when dimension c is lengthened (depending on the motor used), dimensions c6, l5 and lg are also lengthened accordingly.**

You will find additional motor connection dimensions for motor adapters ME and MEL in our STOBER Configurator at http://configurator.stoeber.de. Here, you can directly download a 3D model of your drive.

9.3.2 S shaft design (hollow shaft with shrink ring)

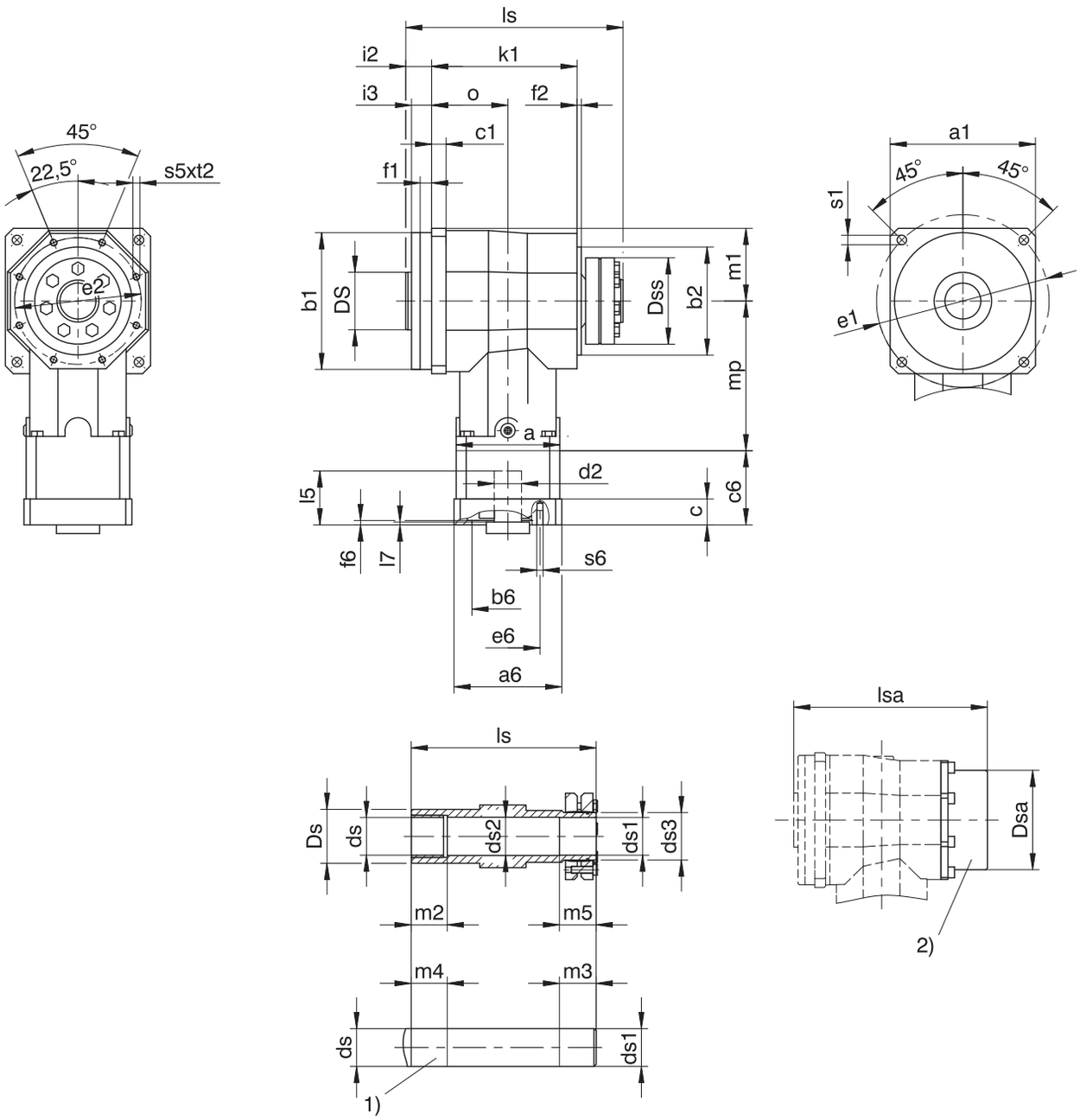

1) Machine shaft: The dimension ls must be met.

2) Cover (optional)

Dimensions of gear units

Type	□a1	Øb1	Øb2	c1	Øds	Øds1	Øds2	Øds3	ØDs	ØDsa	ØDss	Øe1	Øe2	f1	f2	i2	i3	k1	ls	lsa	m1	m2	m3	m4	m5	mp	o	Øs1	s5	t2
KS402	101	95_{h6}	75_{h6}	10	25_{h6}	25_{h6}^{H7}	25.5	30	40	72	60	120	88	8	3	18.0	14.0	104	151.0	158.0	50.5	20	34	25	29	104	53	6.6	M5	9
KS403	101	95_{h6}	75_{h6}	10	25_{h6}	25_{h6}^{H7}	25.5	30	40	72	60	120	88	8	3	18.0	14.0	104	151.0	158.0	50.5	20	34	25	29	184	53	6.6	M5	9
KS502	125	120_{h6}	90_{h6}	10	35_{h6}	35_{h6}^{H7}	35.5	44	50	92	80	145	105	9	3	19.5	15.5	120	171.5	179.5	62.5	30	39	35	34	123	62	9.0	M6	11
KS503	125	120_{h6}	90_{h6}	10	35_{h6}	35_{h6}^{H7}	35.5	44	50	92	80	145	105	9	3	19.5	15.5	120	171.5	179.5	62.5	30	39	35	34	221	62	9.0	M6	11
KS702	155	150_{h6}	110_{h6}	15	45_{h6}	45_{h6}^{H7}	45.5	55	65	112	100	180	130	10	3	24.0	20.0	148	211.0	218.0	77.5	40	42	45	37	151	78	11.0	M8	14
KS703	155	150_{h6}	110_{h6}	15	45_{h6}	45_{h6}^{H7}	45.5	55	65	112	100	180	130	10	3	24.0	20.0	148	211.0	218.0	77.5	40	42	45	37	260	78	11.0	M8	14

Example dimensions for the motor connection

Type	Øb6	Øe6	Ød2max	l5	□a6	c	c6	f6	l7	s6
KS402_ME	60^{H7}	75	19	40	75	18	51.5	3.5	3.0	M5
KS403_ME	40^{H7}	63	14	30	55	15	32.0	3.5	3.0	M5
KS502_ME	95^{H7}	115	24	42	100	21	56.0	4.0	3.0	M8
KS503_ME	60^{H7}	75	19	40	75	18	51.5	3.5	3.0	M5
KS702_ME	110^{H7}	130	32	50	120	24	67.5	4.0	3.5	M8
KS703_ME	95^{H7}	115	24	42	100	21	56.0	4.0	3.0	M8

In the table above, you will find example dimensions for the motor connection for the ME motor adapter. **Note that when dimension c is lengthened (depending on the motor used), dimensions c6, l5 and lg are also lengthened accordingly.**

You will find additional motor connection dimensions for motor adapters ME and MEL in our STOBER Configurator at http://configurator.stoeber.de. Here, you can directly download a 3D model of your drive.

9.3.3 G shaft design (solid shaft without feather key)

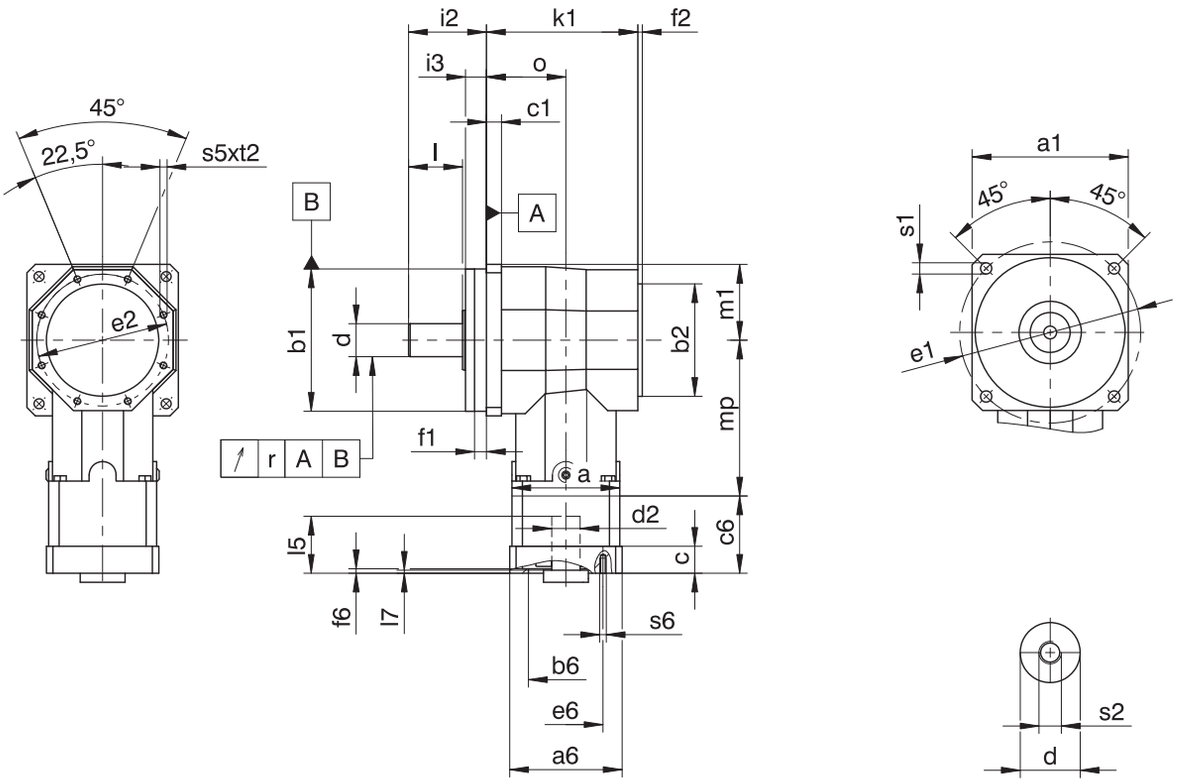

Dimensions of gear units

Type	□a1	Øb1	Øb2	c1	Ød	Øe1	Øe2	f1	f2	i2	i3	l	k1	m1	mp	o	r	Øs1	s2	s5	t2
KS402	101	95_{h6}	75_{h6}	10	22_{k6}	120	88	8	3	52.0	14.0	36	104	50.5	104	53	0.020	6.6	M8	M5	9
KS403	101	95_{h6}	75_{h6}	10	22_{k6}	120	88	8	3	52.0	14.0	36	104	50.5	184	53	0.020	6.6	M8	M5	9
KS502	125	120_{h6}	90_{h6}	10	32_{k6}	145	105	9	3	75.5	15.5	58	120	62.5	123	62	0.020	9.0	M12	M6	11
KS503	125	120_{h6}	90_{h6}	10	32_{k6}	145	105	9	3	75.5	15.5	58	120	62.5	221	62	0.020	9.0	M12	M6	11
KS702	155	150_{h6}	110_{h6}	15	40_{k6}	180	130	10	3	105.0	20.0	82	148	77.5	151	78	0.025	11.0	M16	M8	14
KS703	155	150_{h6}	110_{h6}	15	40_{k6}	180	130	10	3	105.0	20.0	82	148	77.5	260	78	0.025	11.0	M16	M8	14

Example dimensions for the motor connection

Type	Øb6	Øe6	Ød2max	l5	□a6	c	c6	f6	l7	s6
KS402_ME	60^{H7}	75	19	40	75	18	51.5	3.5	3.0	M5
KS403_ME	40^{H7}	63	14	30	55	15	32.0	3.5	3.0	M5
KS502_ME	95^{H7}	115	24	42	100	21	56.0	4.0	3.0	M8
KS503_ME	60^{H7}	75	19	40	75	18	51.5	3.5	3.0	M5
KS702_ME	110^{H7}	130	32	50	120	24	67.5	4.0	3.5	M8
KS703_ME	95^{H7}	115	24	42	100	21	56.0	4.0	3.0	M8

In the table above, you will find example dimensions for the motor connection for the ME motor adapter. **Note that when dimension c is lengthened (depending on the motor used), dimensions c6, l5 and lg are also lengthened accordingly.**

You will find additional motor connection dimensions for motor adapters ME and MEL in our STOBER Configurator at http://configurator.stoeber.de. Here, you can directly download a 3D model of your drive.

9.3.4 P shaft design (solid shaft with feather key)

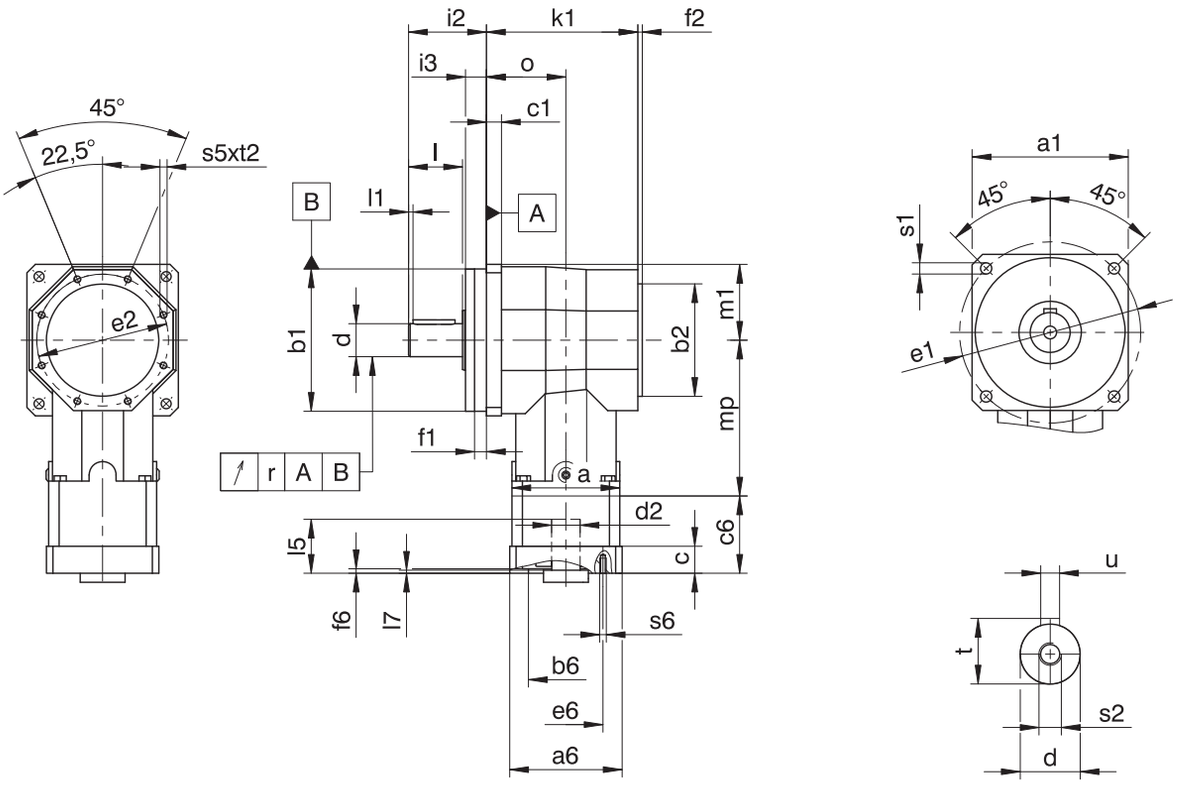

Dimensions of gear units

Type	□a1	Øb1	Øb2	c1	Ød	Øe1	Øe2	f1	f2	i2	i3	l	l1	k1	m1	mp	o	r	Øs1	s2	s5	t	t2	u
KS402	101	95_{h6}	75_{h6}	10	22_{k6}	120	88	8	3	52.0	14.0	36	3	104	50.5	104	53	0.020	6.6	M8	M5	24.5	9	A6×6×28
KS403	101	95_{h6}	75_{h6}	10	22_{k6}	120	88	8	3	52.0	14.0	36	3	104	50.5	184	53	0.020	6.6	M8	M5	24.5	9	A6×6×28
KS502	125	120_{h6}	90_{h6}	10	32_{k6}	145	105	9	3	75.5	15.5	58	3	120	62.5	123	62	0.020	9.0	M12	M6	35.0	11	A10×8×50
KS503	125	120_{h6}	90_{h6}	10	32_{k6}	145	105	9	3	75.5	15.5	58	3	120	62.5	221	62	0.020	9.0	M12	M6	35.0	11	A10×8×50
KS702	155	150_{h6}	110_{h6}	15	40_{k6}	180	130	10	3	105.0	20.0	82	4	148	77.5	151	78	0.025	11.0	M16	M8	43.0	14	A12×8×70
KS703	155	150_{h6}	110_{h6}	15	40_{k6}	180	130	10	3	105.0	20.0	82	4	148	77.5	260	78	0.025	11.0	M16	M8	43.0	14	A12×8×70

Example dimensions for the motor connection

Type	Øb6	Øe6	Ød2max	l5	□a6	c	c6	f6	l7	s6
KS402_ME	60^{H7}	75	19	40	75	18	51.5	3.5	3.0	M5
KS403_ME	40^{H7}	63	14	30	55	15	32.0	3.5	3.0	M5
KS502_ME	95^{H7}	115	24	42	100	21	56.0	4.0	3.0	M8
KS503_ME	60^{H7}	75	19	40	75	18	51.5	3.5	3.0	M5
KS702_ME	110^{H7}	130	32	50	120	24	67.5	4.0	3.5	M8
KS703_ME	95^{H7}	115	24	42	100	21	56.0	4.0	3.0	M8

In the table above, you will find example dimensions for the motor connection for the ME motor adapter. **Note that when dimension c is lengthened (depending on the motor used), dimensions c6, l5 and lg are also lengthened accordingly.**

You will find additional motor connection dimensions for motor adapters ME and MEL in our STOBER Configurator at http://configurator.stoeber.de. Here, you can directly download a 3D model of your drive.

9.3.5 Oil expansion tank

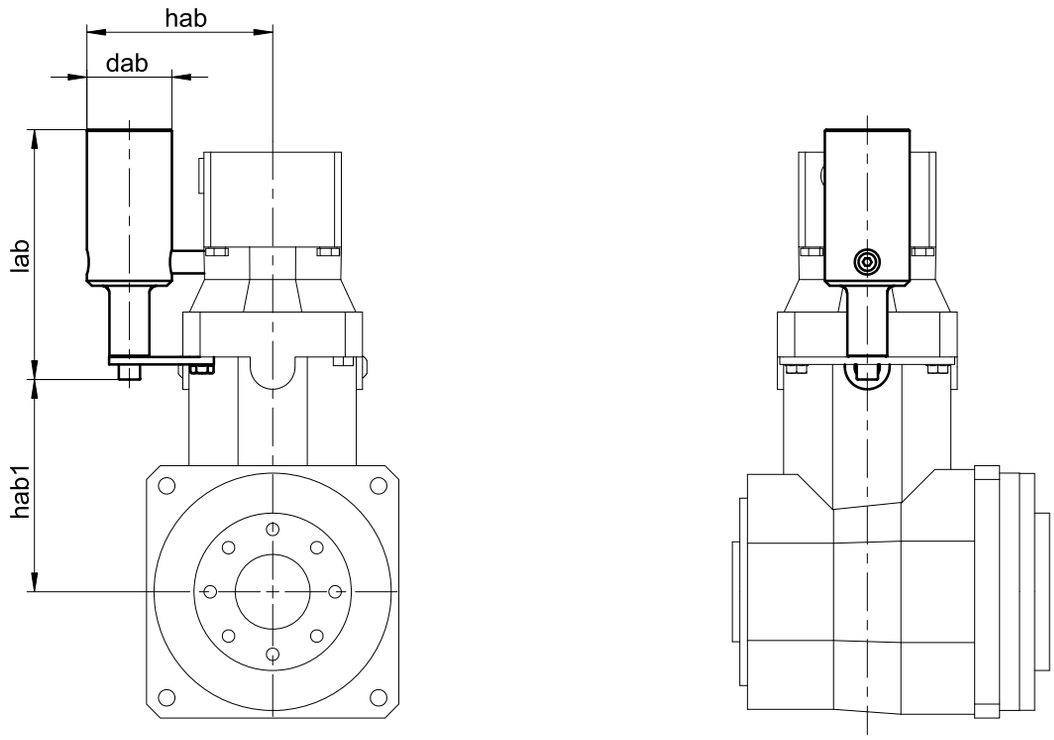

Dimensions

Type	dab	lab	hab	hab1
KS403	34	100	74.5	85
KS503	39	122	92.0	105
KS703	49	134	109.5	132

More information can be found in the chapter [▸ 9.6.6]

9.4 Type designation

This chapter shows you an explanation of the type designation with the associated options.

Additional ordering information not included in the type designation can be found at the end of the chapter.

Example code

KS	5	0	2	G	F	0200	ME

Explanation

Code	Designation	Design
KS	Type	Right-angle servo gear unit
5	Size	5 (example)
0	Generation	Generation 0
2	Stages	Two-stage
3		Three-stage
F	Shaft	Flange hollow shaft
S		Hollow shaft with shrink ring
G		Solid shaft without feather key
P		Solid shaft with feather key
F	Housing	Standard
0200	Transmission ratio (i x 10)	i = 20 (example)
ME	Motor adapter	Motor adapter with EasyAdapt coupling
MEL		Motor adapter with EasyAdapt coupling for large motors

In order to complete the type designation, also specify:

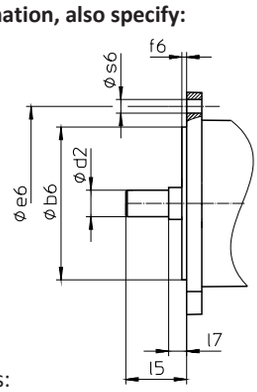

- Motor type or motor dimensions:

  To choose a suitable motor connection, use the STOBER Configurator at http://configurator.stoeber.de and choose your motor or the dimensions of the motor connection.
- Mounting position, see the chapter [▶ 9.5.4]
- Radial shaft seal rings at the output made of NBR or FKM (option), see the chapter [▶ 9.6.5]
- Attachment of oil expansion tank (option) on gear unit side 1 or 2 (required without exception for three-stage gear units in mounting position EL5), see the chapter [▶ 9.6.6]

9.4.1 Nameplate

An example gear unit nameplate is explained in the figure below.

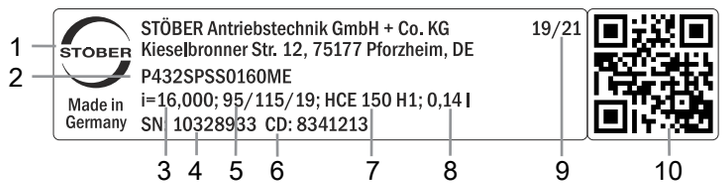

Code	Designation
1	Name of manufacturer
2	Type designation
3	Gear ratio of the gear unit
4	Serial number of the gear unit
5	Dimensions of the motor adapter (diameter of pilot/bolt circle/motor shaft)
6	Customer-specific data
7	Lubricant specification
8	Lubricant fill volume
9	Date of manufacture (year/calendar week)
10	QR code (link to product information)

9.4.1.1 Supporting documents

You can view or download supporting documents for the product by reading off the serial number on the nameplate of the product and entering it at the following address online:
https://id.stober.com

Alternatively, you can use a suitable mobile device to scan in the QR code on the nameplate of the product in order to be linked to the supporting documents.

9.5 Product description

9.5.1 Input options

ME motor adapter for attaching synchronous servo motors

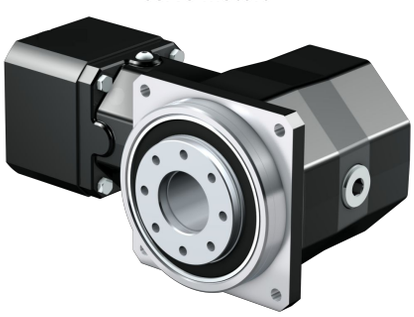

http://www.stoeber.de/en/KSME

EZ synchronous servo motor

http://www.stoeber.de/en/KSEZ

9.5.2 Motor adapter with EasyAdapt coupling (ME/MEL)

In this chapter, you will find a description of the EasyAdapt coupling.

Properties:

- Fast and easy motor attachment
- One-piece, rugged clamp coupling with expanding function
- Lowest mass moments of inertia for the highest dynamics
- Balanced for smooth running without vibration, even at high speeds
- Large motor shaft diameter range
- Error-free, thanks to exact centering of the motor
- For reduced backlash, the motor shaft bearing must have an axially backlash-free design

Fig. 1: EasyAdapt coupling

9.5.3 Installation conditions

Take care to align the machine shaft with the gear unit hollow shaft when attaching the gear unit.

Maximum deviation ≤ 0.03 mm.

Hollow shaft with shrink ring

The tolerance of the hollow shaft hole is ISO H7.

The machine shaft must be ISO h6.

Select a material for the machine shaft with a permitted surface pressure of p ≥ 325 N/mm^2.

Possible materials:

- C45E +QT
- 42CrMo4

The torque and force values listed in this catalog are valid under the following conditions:

- When the flange hollow shaft and gear housing are fastened on the machine side using screws of strength class 12.9
- When the gear housings are adjusted at pilot øb1. The machine-side fit must be H7.
- When the flange hollow shaft is adjusted using the connecting element at pilot øbf or ødf

9.5.4 Mounting positions

The following table shows the standard mounting positions.

The numbers identify the gear unit sides. The mounting position is defined by the gear side facing downwards.

EL1	EL2	EL3
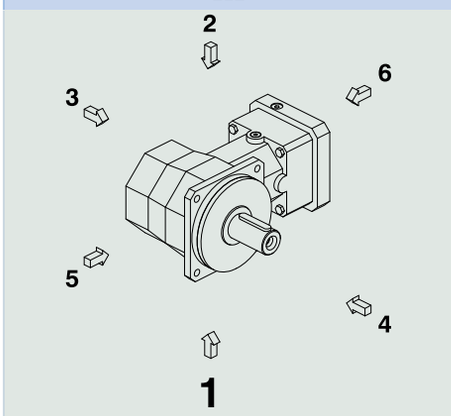	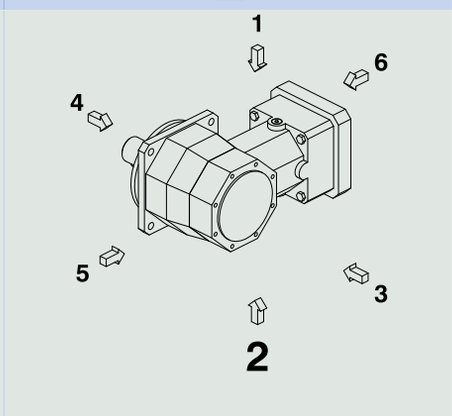	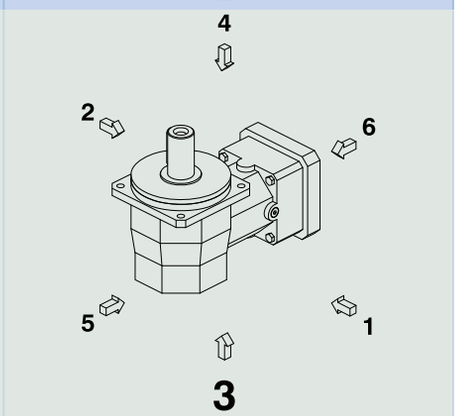
EL4	**EL5**	**EL6**
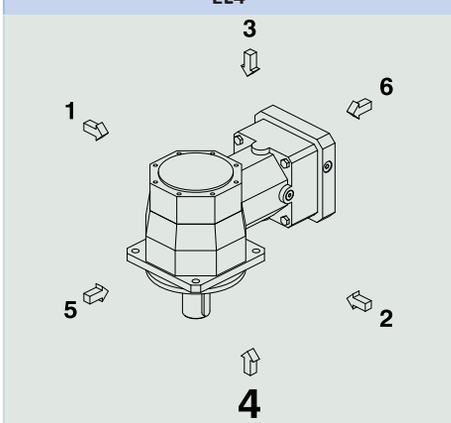	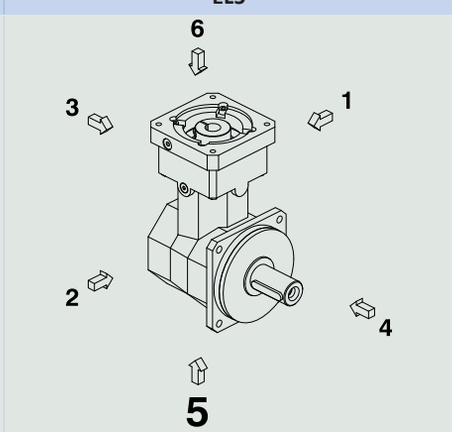	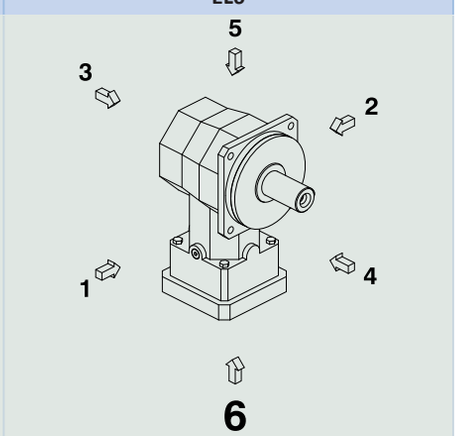

Since the lubricant filling volume of the gear unit depends on the mounting position, the mounting position must be specified when ordering.

9.5.5 Lubricants

STOBER fills the gear units with the amount and type of lubricant specified on the nameplate. The filling volume and the structure of the gear units depend on the mounting position.

Only install the gear units in the intended mounting position! Reposition the gear units only after consulting STOBER. Otherwise, STOBER assumes no liability for the gear units.

You will receive lubricants for use in the food industry upon request.

9.5.6 Position of locking screw access

Mounting position EL1	Mounting position EL4
Locking screw in 270° position (standard)	Locking screw in 270° position (standard)
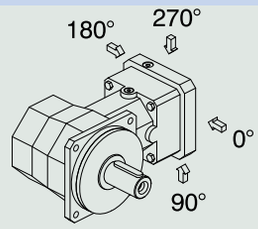	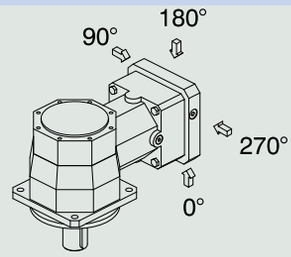

Indicate variations for your gear unit in the order.

Note that the access hole for the locking screw also rotates when the gear unit is rotated to another mounting position.

9.5.7 Other product features

Feature	Value
Max. permitted gear unit temperature (on the surface of the gear unit)	≤ 90 °C
Paint	Black RAL 9005
Explosion-proof design in accordance with (ATEX) Directive 2014/34/EU (optional)	Available, see Document ID 441677_en
Efficiency:	
η_{get} two-stage	95%
η_{get} three-stage	93%
Protection class: [1]	IP65

9.5.8 Direction of rotation

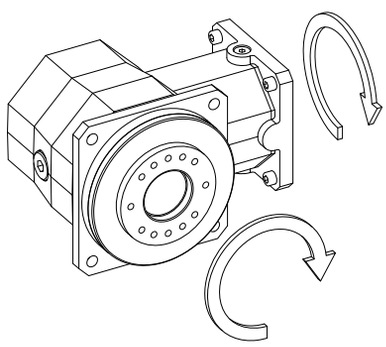

The pictures show mounting position EL1.

9.6 Project configuration

Project your drives using our SERVOsoft designing software. Download SERVOsoft for free at https://www.stoeber.de/en/ServoSoft.

Observe the limit conditions in this chapter to ensure a safe design for your drives.

An explanation of the formula symbols can be found in the chapter [▸ 18.1].

[1] Observe the protection class of all the components.

9.6.1 Drive selection

The formula symbols for values actually present in the application are marked with *.

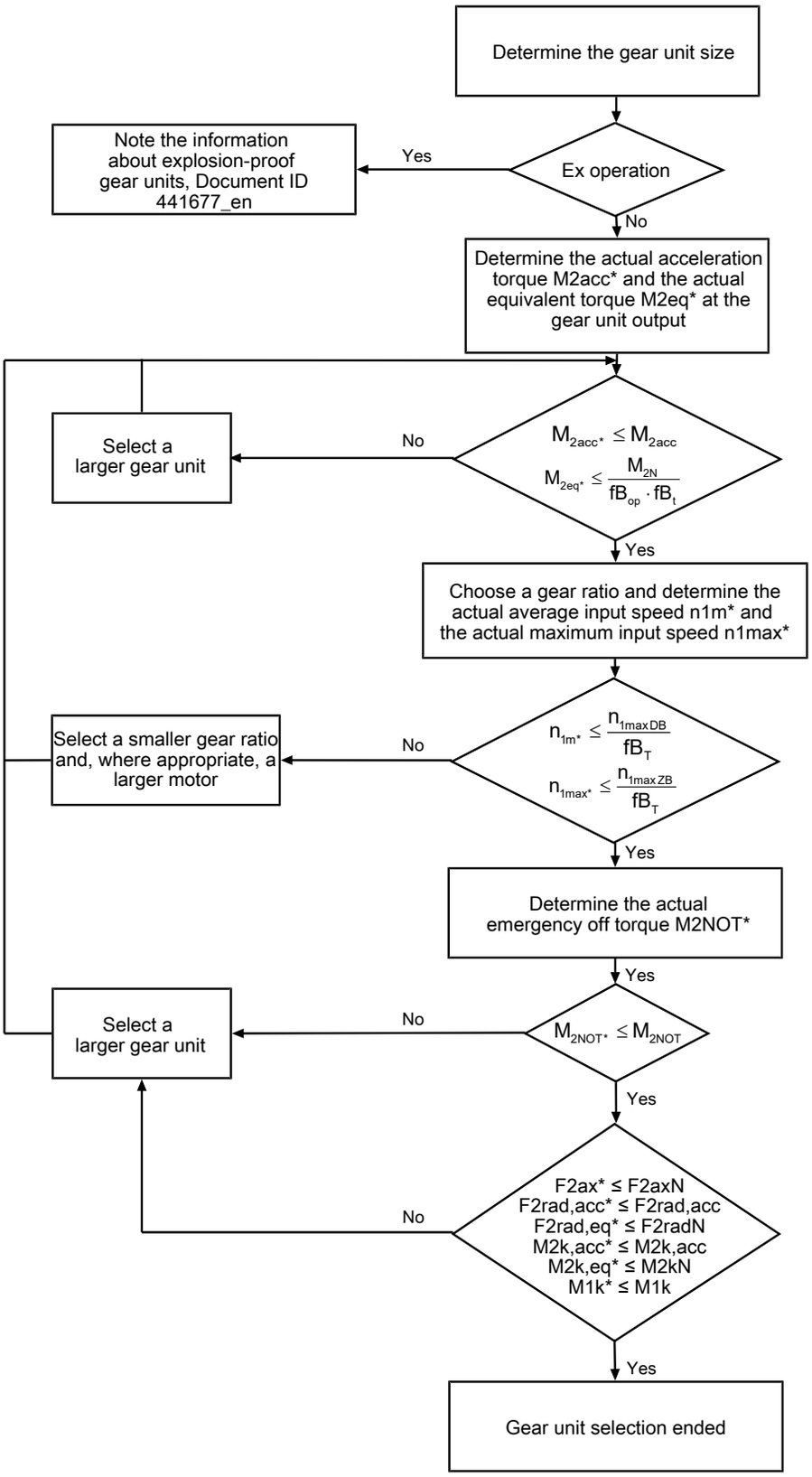

Calculate the forces and tilting torques in the chapter Permitted shaft loads.

The values for i, n_{1maxDB}, n_{1maxZB}, M_{2acc}, M_{2NOT} and M_{2N} can be found in the selection tables.

The values for fB_T, fB_{op} and fB_t can be found in the corresponding tables in this chapter.

Example of cyclic operation

The following calculations are based on a representation of the power taken from the output based in accordance with the following example:

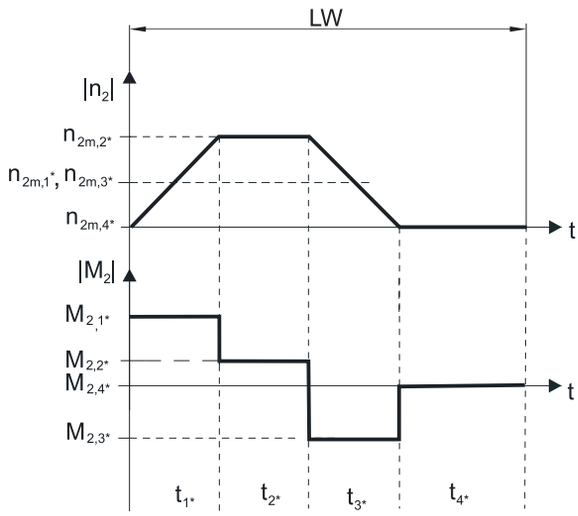

Calculation of the actual maximum acceleration torque

$$M_{2acc*} = J_{tot} \cdot \frac{\Delta n_2}{9.55 \cdot \Delta t} + M_{L*}$$

Calculation of the actual average input speed

$$n_{1m*} = n_{2m*} \cdot i$$

$$n_{2m*} = \frac{|n_{2m,1*}| \cdot t_{1*} + \ldots + |n_{2m,n*}| \cdot t_{n*}}{t_{1*} + \ldots + t_{n*}}$$

If $t_{1*} + \ldots + t_{3*} \geq 6$ min, calculate n_{2m*} without the rest phase t_{4*}.

The values for the ratio i can be found in the selection tables.

Calculation of the actual emergency-off torque

$$M_{2NOT*} = J_{tot} \cdot \frac{\Delta n_2}{9.55 \cdot \Delta t} + M_{L*}$$

Calculation of the actual equivalent torque

$$M_{2eq*} = \sqrt[3]{\frac{|n_{2m,1*}| \cdot t_{1*} \cdot |M_{2,1*}{}^3| + \ldots + |n_{2m,n*}| \cdot t_{n*} \cdot |M_{2,n*}{}^3|}{|n_{2m,1*}| \cdot t_{1*} + \ldots + |n_{2m,n*}| \cdot t_{n*}}}$$

Operating factors

Operating mode	fB_{op}
Uniform continuous operation	1.00
Cyclic operation	1.00
Reversing load cyclic operation	1.00

Run time	fB_t
Daily runtime ≤ 8 h	1.00
Daily runtime ≤ 16 h	1.15
Daily runtime ≤ 24 h	1.20

Temperature		fB_T
Motor cooling	**Surrounding temperature**	
Motor with forced ventilation	≤ 20 °C	0.9
	≤ 30 °C	1.0
	≤ 40 °C	1.15
Motor with convection cooling	≤ 20 °C	1.0
	≤ 30 °C	1.1
	≤ 40 °C	1.25

Notes

- The maximum permitted gear unit temperature of ≤ 90 °C must not be exceeded. Doing so may result in damage to the gear unit.

9.6.2 Permitted shaft loads for the output shaft

The values specified in the tables apply to the permitted shaft loads:

- For shaft dimensions in accordance with the catalog
- For output speeds n_{2m*} ≤ 100 rpm ($F^{2axN} = F_{2ax100}$; $F_{2radN} = F_{2rad100}$; $M_{2kN} = M_{2k100}$)
- Only if radial forces on the gear unit are stabilized by its pilots (housing, flange shaft)

9.6.2.1 F shaft design

Permitted shaft loads for F shaft design (flange hollow shaft)

Type	z_2 [mm]	F_{2ax100} [N]	$F_{2rad100}$ [N]	$F_{2rad,acc}$ [N]	M_{2k100} [Nm]	$M_{2k,acc}$ [Nm]
KS4	38.0	4000	6842	10263	260	390
KS5	45.0	6000	12222	18333	550	825
KS7	55.0	10000	16727	25091	920	1380

For other output speeds, download diagrams at http://configurator.stoeber.de.

The following applies to output speeds n_{2m*} > 100 rpm:

$$F_{2axN} = \frac{F_{2ax100}}{\sqrt[3]{\frac{n_{2m*}}{100\ \text{rpm}}}} \qquad F_{2radN} = \frac{F_{2rad100}}{\sqrt[3]{\frac{n_{2m*}}{100\ \text{rpm}}}} \qquad M_{2kN} = \frac{M_{2k100}}{\sqrt[3]{\frac{n_{2m*}}{100\ \text{rpm}}}}$$

The values for F_{2ax100}, $F_{2rad100}$ and M_{2k100} can be found in the table "Permitted shaft loads" in this chapter.

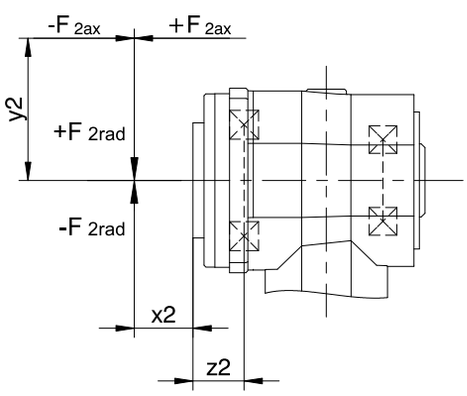

Fig. 2: Force application points for flange hollow shaft

You can determine the permitted radial forces from the permitted breakdown torque M_{2kN} and $M_{2k,acc}$. The actual radial forces may not exceed the permitted radial forces. The permitted radial forces pertain to the shaft end (x2 = 0).

$$M_{2k,acc*} = \frac{F_{2ax*} \cdot y_2 + F_{2rad,acc*} \cdot (x_2 + z_2)}{1000} \leq M_{2k,acc}$$

For applications with multiple axial and/or radial forces, you must add the forces as vectors.

In the event of EMERGENCY OFF operation (max. 1000 load changes), you can multiply the permitted forces and torques for F_{2ax20}, F_{2rad20} and M_{2k20} by a factor of two.

Also note the calculation for equivalent values:

$$M_{2k,eq*} = \sqrt[3]{\frac{|n_{2m,1*}| \cdot t_{1*} \cdot |M_{2k,acc,1*}{}^3| + \ldots + |n_{2m,n*}| \cdot t_{n*} \cdot |M_{2k,acc,n*}{}^3|}{|n_{2m,1*}| \cdot t_{1*} + \ldots + |n_{2m,n*}| \cdot t_{n*}}} \leq M_{2kN}$$

$$F_{2rad,eq*} = \sqrt[3]{\frac{|n_{2m,1*}| \cdot t_{1*} \cdot |F_{2rad,acc,1*}{}^3| + \ldots + |n_{2m,n*}| \cdot t_{n*} \cdot |F_{2rad,acc,n*}{}^3|}{|n_{2m,1*}| \cdot t_{1*} + \ldots + |n_{2m,n*}| \cdot t_{n*}}} \leq F_{2radN}$$

$$F_{2ax,eq*} \leq F_{2axN}$$

9.6.2.2 S shaft design

Permitted shaft loads for S shaft design (hollow shaft with shrink ring)

Type	z_2 [mm]	F_{2ax100} [N]	$F_{2rad100}$ [N]	$F_{2rad,acc}$ [N]	M_{2k100} [Nm]	$M_{2k,acc}$ [Nm]
KS4	36.0	4000	5000	5000	260	260
KS5	42.0	6000	8000	8000	550	550
KS7	52.0	10000	10000	10000	920	920

For other output speeds, download diagrams at http://configurator.stoeber.de.

The following applies to output speeds n_{2m*} > 100 rpm:

$$F_{2axN} = \frac{F_{2ax100}}{\sqrt[3]{\frac{n_{2m*}}{100\ \text{rpm}}}} \qquad F_{2radN} = \frac{F_{2rad100}}{\sqrt[3]{\frac{n_{2m*}}{100\ \text{rpm}}}} \qquad M_{2kN} = \frac{M_{2k100}}{\sqrt[3]{\frac{n_{2m*}}{100\ \text{rpm}}}}$$

The values for F_{2ax100}, $F_{2rad100}$ and M_{2k100} can be found in the table "Permitted shaft loads" in this chapter.

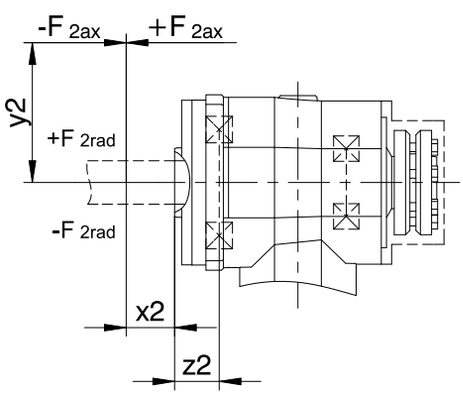

Fig. 3: Force application points for the hollow shaft with shrink ring

You can determine the permitted radial forces from the permitted breakdown torque M_{2kN} and $M_{2k,acc}$. The actual radial forces may not exceed the permitted radial forces. The permitted radial forces pertain to the shaft end (x2 = 0).

$$M_{2k,acc*} = \frac{2 \cdot F_{2ax*} \cdot y_2 + F_{2rad,acc*} \cdot (x_2 + z_2)}{1000} \leq M_{2k,acc}$$

For applications with multiple axial and/or radial forces, you must add the forces as vectors.

In the event of EMERGENCY OFF operation (max. 1000 load changes), you can multiply the permitted forces and torques for F_{2ax20}, F_{2rad20} and M_{2k20} by a factor of two.

Also note the calculation for equivalent values:

$$M_{2k,eq*} = \sqrt[3]{\frac{|n_{2m,1*}| \cdot t_{1*} \cdot |M_{2k,acc,1*}{}^3| + \ldots + |n_{2m,n*}| \cdot t_{n*} \cdot |M_{2k,acc,n*}{}^3|}{|n_{2m,1*}| \cdot t_{1*} + \ldots + |n_{2m,n*}| \cdot t_{n*}}} \leq M_{2kN}$$

$$F_{2rad,eq*} = \sqrt[3]{\frac{|n_{2m,1*}| \cdot t_{1*} \cdot |F_{2rad,acc,1*}{}^3| + \ldots + |n_{2m,n*}| \cdot t_{n*} \cdot |F_{2rad,acc,n*}{}^3|}{|n_{2m,1*}| \cdot t_{1*} + \ldots + |n_{2m,n*}| \cdot t_{n*}}} \leq F_{2radN}$$

$$F_{2ax,eq*} \leq F_{2axN}$$

9.6.2.3 G and P shaft designs

Permitted shaft loads for G and P shaft designs (solid shaft)

Type	z_2 [mm]	F_{2ax100} [N]	$F_{2rad100}$ [N]	$F_{2rad,acc}$ [N]	M_{2k100} [Nm]	$M_{2k,acc}$ [Nm]
KS4	34.0	4000	5000	5000	260	260
KS5	40.0	6000	8000	8000	550	550
KS7	51.0	10000	10000	10000	920	920

For other output speeds, download diagrams at http://configurator.stoeber.de.

The following applies to output speeds n_{2m*} > 100 rpm:

$$F_{2axN} = \frac{F_{2ax100}}{\sqrt[3]{\frac{n_{2m*}}{100\ \text{rpm}}}} \qquad F_{2radN} = \frac{F_{2rad100}}{\sqrt[3]{\frac{n_{2m*}}{100\ \text{rpm}}}} \qquad M_{2kN} = \frac{M_{2k100}}{\sqrt[3]{\frac{n_{2m*}}{100\ \text{rpm}}}}$$

The values for F_{2ax100}, $F_{2rad100}$ and M_{2k100} can be found in the table "Permitted shaft loads" in this chapter.

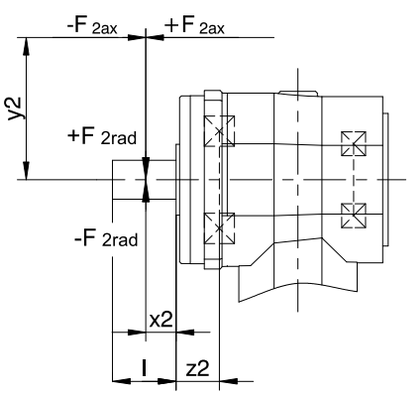

Fig. 4: Force application points for solid shaft

The specified values for $F_{2rad100}$ and $F_{2rad,acc}$ refer to an application of force at the center of the output shaft: $x_2 = l/2$.

Shaft dimensions can be found in the "Dimensional drawings" chapter.

The following applies to other force application points:

$$M_{2k,acc*} = \frac{2 \cdot F_{2ax*} \cdot y_2 + F_{2rad,acc*} \cdot (x_2 + z_2)}{1000} \leq M_{2k,acc}$$

$$F_{2rad,acc*} \leq F_{2rad,acc}$$

$$F_{2ax*} \leq F_{2axN}$$

The values for $F_{2rad,acc}$ and $M_{2k,acc}$ can be found in the table "Permitted shaft loads" in this chapter.

For applications with multiple axial and/or radial forces, you must add the forces as vectors.

In the event of EMERGENCY OFF operation (max. 1000 load changes), you can multiply the permitted forces and torques for F_{2ax20}, F_{2rad20} and M_{2k20} by a factor of two.

Also note the calculation for equivalent values:

$$M_{2k,eq*} = \sqrt[3]{\frac{|n_{2m,1*}| \cdot t_{1*} \cdot |M_{2k,acc,1*}{}^3| + \ldots + |n_{2m,n*}| \cdot t_{n*} \cdot |M_{2k,acc,n*}{}^3|}{|n_{2m,1*}| \cdot t_{1*} + \ldots + |n_{2m,n*}| \cdot t_{n*}}} \leq M_{2kN}$$

$$F_{2rad,eq*} = \sqrt[3]{\frac{|n_{2m,1*}| \cdot t_{1*} \cdot |F_{2rad,acc,1*}{}^3| + \ldots + |n_{2m,n*}| \cdot t_{n*} \cdot |F_{2rad,acc,n*}{}^3|}{|n_{2m,1*}| \cdot t_{1*} + \ldots + |n_{2m,n*}| \cdot t_{n*}}} \leq F_{2radN}$$

9.6.3 Torsional stiffness

The torsional stiffness C_2 depends on the shaft design. Details for the F shaft design can be found in the selection tables.

Details regarding the G, P and S shaft designs can be found in the following table:

	Torsional stiffness C_2 G and P shaft designs	Torsional stiffness C_2 S shaft design
KS4	6.5	7.1
KS5	15	16
KS7	32	36

9.6.4 Permitted breakdown torques at the gear unit input

For a horizontal mounting position of the motor, verify that the permitted breakdown torque at the gear unit input is not exceeded before installation on a STOBER gear unit. You can find information for how to do that in this chapter.

Calculate the actual breakdown torque as follows:

$M_{1k*} = F_{1k*} \bullet l_{sp} \leq M_{1k}$

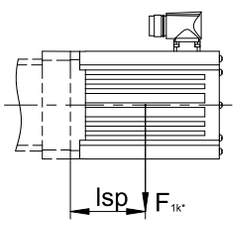

Type	M_{1k} [Nm]
KS402_ME	20
KS403_ME	10
KS502_ME	40
KS503_ME	20
KS702_ME	80
KS703_ME	40

The values also apply to the MEL motor adapter.

9.6.5 Recommendation for radial shaft seal rings

For a duty cycle > 60% and higher surrounding temperatures, we recommend radial shaft seal rings made of FKM at the output.

Properties:

- Excellent temperature resistance
- High chemical stability
- Very good resistance to aging
- Excellent resistance in oils and greases
- For use in the food, beverage and pharmaceutical industries

Leak-proofness

Our gear units are equipped with high-quality radial shaft seal rings and checked for leaks. However, a leak cannot be fully ruled out over the length of use of a gear unit. If you use a gear unit with goods incompatible with the lubricant, you must take measures to prevent direct contact with the gear unit lubricant in case of a leak.

9.6.6 Oil expansion tank

The gear units have a higher fill level in mounting position EL5. The oil expansion tank prevents oil from escaping out of the gear unit.

Notes

- Three-stage KS gear units in mounting position EL5 can be used only in combination with an oil expansion tank!
- Please specify the attachment side (gear unit side 1 or 2) in the order.
- Note that mounting an oil expansion tank is not possible with every motor adapter (collision between motor adapter and oil expansion tank).

9.7 Additional documentation

Additional documentation related to the product can be found at
http://www.stoeber.de/en/downloads/

Enter the ID of the documentation in the Search... field.

Documentation	ID
Operating manual for KL/KS/PHK/PHKX/PHQK/PK/PKX right-angle servo gear units and right-angle servo geared motors	443150_en
Operating manual for explosion-proof KL/KS/PHK/PHKX/PHQK/PK/PKX right-angle gear units	443005_en
Information explosion-proof gear units	441677_en

10 PKX right-angle planetary gear units

Table of contents

10.1 Overview ... 202

10.2 Selection tables ... 203

10.3 Dimensional drawings ... 207

10.3.1 G shaft design (solid shaft without feather key) ... 208

10.3.2 P shaft design (solid shaft with feather key) ... 209

10.4 Type designation ... 210

10.4.1 Nameplate ... 211

10.5 Product description ... 211

10.5.1 Input options ... 211

10.5.2 Motor adapter with FlexiAdapt coupling (MF) ... 212

10.5.3 Installation conditions ... 212

10.5.4 Mounting positions ... 213

10.5.5 Lubricants ... 213

10.5.6 Position of locking screw access ... 214

10.5.7 Other product features ... 214

10.5.8 Direction of rotation ... 214

10.6 Project configuration ... 214

10.6.1 Drive selection ... 215

10.6.2 Permitted shaft loads for the output shaft ... 217

10.6.3 Permitted breakdown torques at the gear unit input ... 220

10.6.4 Recommendation for radial shaft seal rings ... 220

10.6.5 Reverse operation ... 221

10.7 Additional documentation ... 221

10 PKX right-angle planetary gear units

10.1 Overview

Helical-geared precision right-angle planetary gear units

Features

Power density	★★★★☆
Backlash	★★★★★
Price category	€€€
Shaft load	★★★★☆
Smooth operation	★★☆☆☆
Torsional stiffness	★★★☆☆
Mass moment of inertia	★★☆☆☆
Helical gearing	✓
Maintenance-free	✓
Small installation space	✓
Continuous operation without cooling	✓
Reinforced output bearing	✓ (optional)
Easy and reliable attachment to any synchronous servo motor	✓

Key ★☆☆☆☆ good | ★★★★★ excellent
€ Economy | €€€€€ Premium

Technical data

i	3 – 300
M_{2acc}	21 – 3300 Nm
$\Delta\phi_2$	2 – 8.5 arcmin
η_{get}	94 – 96 %

10.2 Selection tables

The technical data specified in the selection tables applies to:

- Installation altitudes up to 1000 m above sea level
- Surrounding temperatures from 0 °C to 40 °C
- Without consideration for thermal limiting performance
- M_{2acc}, M_{2accHT}: Solid shaft design without feather key (we generally recommend this shaft design for cyclic operation)

You can find the mass moment of inertia J_1 for smaller motor shaft diameters and all other technical data at http://configurator.stoeber.de.

An explanation of the formula symbols can be found in the chapter [▸ 18.1].

i	i_{exakt}	Type	n_{1MAXDB} EL1,2,5,6 [rpm]	n_{1MAXDB} EL3,4 [rpm]	n_{1MAXZB} [rpm]	d_{MW} [mm]	J_1 [kgcm²]	m [kg]	$\Delta\varphi_2$ [arcmin]	$\Delta\varphi_{2red}$ [arcmin]	C_2 [Nm/arcmin]	L_{pA} [dB(A)]	M_{2N} [Nm]	M_{2acc} [Nm]	M_{2accHT} [Nm]	M_{2NOT} [Nm]
P231KX ($M_{2acc,max}$ = 25 Nm)																
4.000	4/1	P231_0040KX301_0010 MF	3000	2500	4500	≤19	1.1	3.0	8.5	–	1.5	70	15	25	–	51
5.000	5/1	P231_0050KX301_0010 MF	3000	2500	4500	≤19	1.0	3.0	8.0	–	1.6	70	15	25	–	51
7.000	7/1	P231_0070KX301_0010 MF	3000	2500	4500	≤19	1.0	3.0	7.5	–	1.7	70	15	23	–	46
8.000	8/1	P231_0040KX301_0020 MF	3500	3000	5500	≤19	0.81	3.0	8.5	–	1.5	66	16	25	–	51
10.00	10/1	P231_0050KX301_0020 MF	3500	3000	5500	≤19	0.81	3.0	8.0	–	1.6	66	16	25	–	51
12.00	12/1	P231_0040KX301_0030 MF	3500	3500	6000	≤19	0.75	3.0	8.5	–	1.5	64	16	25	–	51
15.00	15/1	P231_0050KX301_0030 MF	3500	3500	6000	≤19	0.75	3.0	8.0	–	1.6	64	16	25	–	51
20.00	20/1	P231_0100KX301_0020 MF	3500	3000	5500	≤19	0.80	3.0	7.0	–	1.6	66	12	21	–	41
21.00	21/1	P231_0070KX301_0030 MF	3500	3500	6000	≤19	0.75	3.0	7.5	–	1.7	64	16	23	–	46
24.00	24/1	P231_0080KX301_0030 MF	3500	3500	6000	≤19	0.75	3.0	7.5	–	1.6	64	14	21	–	41
30.00	30/1	P231_0100KX301_0030 MF	3500	3500	6000	≤19	0.75	3.0	7.0	–	1.6	64	12	21	–	41
P232KX ($M_{2acc,max}$ = 25 Nm)																
35.00	35/1	P232_0350KX301_0010 MF	3000	2500	4500	≤19	1.0	3.5	8.5	–	1.8	70	18	25	–	51
40.00	40/1	P232_0200KX301_0020 MF	3500	3000	5500	≤19	0.81	3.5	8.5	–	1.8	66	16	25	–	51
50.00	50/1	P232_0250KX301_0020 MF	3500	3000	5500	≤19	0.81	3.5	8.5	–	1.8	66	16	25	–	51
56.00	56/1	P232_0280KX301_0020 MF	3500	3000	5500	≤19	0.81	3.5	8.5	–	1.8	66	16	24	–	48
60.00	60/1	P232_0200KX301_0030 MF	3500	3500	6000	≤19	0.75	3.5	8.5	–	1.8	64	16	25	–	51
70.00	70/1	P232_0350KX301_0020 MF	3500	3000	5500	≤19	0.81	3.5	8.5	–	1.8	66	18	25	–	51
75.00	75/1	P232_0250KX301_0030 MF	3500	3500	6000	≤19	0.75	3.5	8.5	–	1.8	64	16	25	–	51
80.00	80/1	P232_0400KX301_0020 MF	3500	3000	5500	≤19	0.80	3.5	8.5	–	1.8	66	16	24	–	48
84.00	84/1	P232_0280KX301_0030 MF	3500	3500	6000	≤19	0.75	3.5	8.5	–	1.8	64	16	24	–	48
100.0	100/1	P232_0500KX301_0020 MF	3500	3000	5500	≤19	0.80	3.5	8.0	–	1.8	66	19	25	–	51
105.0	105/1	P232_0350KX301_0030 MF	3500	3500	6000	≤19	0.75	3.5	8.5	–	1.8	64	18	25	–	51
120.0	120/1	P232_0400KX301_0030 MF	3500	3500	6000	≤19	0.75	3.5	8.5	–	1.8	64	16	24	–	48
140.0	140/1	P232_0700KX301_0020 MF	3500	3000	5500	≤19	0.81	3.5	8.0	–	1.8	66	18	23	–	46
150.0	150/1	P232_0500KX301_0030 MF	3500	3500	6000	≤19	0.75	3.5	8.0	–	1.8	64	19	25	–	51
200.0	200/1	P232_1000KX301_0020 MF	3500	3000	5500	≤19	0.80	3.5	8.0	–	1.6	66	16	21	–	41
210.0	210/1	P232_0700KX301_0030 MF	3500	3500	6000	≤19	0.75	3.5	8.0	–	1.8	64	18	23	–	46
300.0	300/1	P232_1000KX301_0030 MF	3500	3500	6000	≤19	0.75	3.5	8.0	–	1.6	64	16	21	–	41
P331KX ($M_{2acc,max}$ = 75 Nm)																
3.000	3/1	P331_0030KX301_0010 MF	3000	2500	4500	≤19	1.3	3.8	7.5	5.5	2.4	70	29	38	38	68
4.000	4/1	P331_0040KX301_0010 MF	3000	2500	4500	≤19	1.1	3.8	6.5	4.5	3.3	70	39	50	50	91
5.000	5/1	P331_0050KX301_0010 MF	3000	2500	4500	≤19	1.1	3.8	6.0	4.0	3.8	70	45	63	63	113
6.000	6/1	P331_0030KX301_0020 MF	3500	3000	5500	≤19	0.87	3.8	7.5	5.5	2.4	66	29	38	38	77
7.000	7/1	P331_0070KX301_0010 MF	3000	2500	4500	≤19	1.0	3.8	5.5	3.5	4.2	70	45	69	75	138
8.000	8/1	P331_0040KX301_0020 MF	3500	3000	5500	≤19	0.83	3.8	6.5	4.5	3.3	66	39	50	50	103
10.00	10/1	P331_0050KX301_0020 MF	3500	3000	5500	≤19	0.82	3.8	6.0	4.0	3.8	66	45	63	63	129
12.00	12/1	P331_0040KX301_0030 MF	3500	3500	6000	≤19	0.76	3.8	6.5	4.5	3.3	64	39	50	50	103
14.00	14/1	P331_0070KX301_0020 MF	3500	3000	5500	≤19	0.81	3.8	5.5	3.5	4.2	66	45	69	75	138
15.00	15/1	P331_0050KX301_0030 MF	3500	3500	6000	≤19	0.75	3.8	6.0	4.0	3.8	64	45	63	63	129
16.00	16/1	P331_0080KX301_0020 MF	3500	3000	5500	≤19	0.81	3.8	5.5	3.5	4.1	66	40	63	65	126
20.00	20/1	P331_0100KX301_0020 MF	3500	3000	5500	≤19	0.81	3.8	5.0	3.0	4.0	66	36	60	60	120
21.00	21/1	P331_0070KX301_0030 MF	3500	3500	6000	≤19	0.75	3.8	5.5	3.5	4.2	64	45	69	75	138
24.00	24/1	P331_0080KX301_0030 MF	3500	3500	6000	≤19	0.75	3.8	5.5	3.5	4.1	64	40	63	65	126
30.00	30/1	P331_0100KX301_0030 MF	3500	3500	6000	≤19	0.75	3.8	5.0	3.0	4.0	64	36	60	60	120
P332KX ($M_{2acc,max}$ = 75 Nm)																
32.00	32/1	P332_0160KX301_0020 MF	3500	3000	5500	≤19	0.81	4.1	5.5	3.5	5.0	66	45	65	65	130
35.00	35/1	P332_0350KX301_0010 MF	3000	2500	4500	≤19	1.0	4.1	5.5	3.5	5.2	70	50	75	75	150
40.00	40/1	P332_0200KX301_0020 MF	3500	3000	5500	≤19	0.81	4.1	5.5	3.5	5.1	66	50	75	75	150

i	i_{exakt}	Type	n_{1MAXDB} EL1,2,5,6 [rpm]	n_{1MAXDB} EL3,4 [rpm]	n_{1MAXZB} [rpm]	d_{MW} [mm]	J_1 [kgcm²]	m [kg]	$\Delta\varphi_2$ [arcmin]	$\Delta\varphi_{2red}$ [arcmin]	C_2 [Nm/arcmin]	L_{pA} [dB(A)]	M_{2N} [Nm]	M_{2acc} [Nm]	M_{2accHT} [Nm]	M_{2NOT} [Nm]
P332KX ($M_{2acc,max}$ = 75 Nm)																
50.00	50/1	P332_0250KX301_0020 MF	3500	3000	5500	≤19	0.81	4.1	5.5	3.5	5.1	66	50	75	75	150
56.00	56/1	P332_0280KX301_0020 MF	3500	3000	5500	≤19	0.81	4.1	5.5	3.5	5.1	66	45	65	70	130
60.00	60/1	P332_0200KX301_0030 MF	3500	3500	6000	≤19	0.75	4.1	5.5	3.5	5.1	64	50	75	75	150
64.00	64/1	P332_0320KX301_0020 MF	3500	3000	5500	≤19	0.81	4.1	5.5	3.5	4.5	66	48	63	65	126
70.00	70/1	P332_0350KX301_0020 MF	3500	3000	5500	≤19	0.81	4.1	5.5	3.5	5.2	66	50	75	75	150
75.00	75/1	P332_0250KX301_0030 MF	3500	3500	6000	≤19	0.75	4.1	5.5	3.5	5.1	64	50	75	75	150
80.00	80/1	P332_0400KX301_0020 MF	3500	3000	5500	≤19	0.80	4.1	5.5	3.5	4.8	66	45	65	65	130
84.00	84/1	P332_0280KX301_0030 MF	3500	3500	6000	≤19	0.75	4.1	5.5	3.5	5.1	64	45	65	70	130
100.0	100/1	P332_0500KX301_0020 MF	3500	3000	5500	≤19	0.80	4.1	5.0	3.0	5.0	66	50	75	75	150
105.0	105/1	P332_0350KX301_0030 MF	3500	3500	6000	≤19	0.75	4.1	5.5	3.5	5.2	64	50	75	75	150
120.0	120/1	P332_0400KX301_0030 MF	3500	3500	6000	≤19	0.75	4.1	5.5	3.5	4.8	64	45	65	65	130
140.0	140/1	P332_0700KX301_0020 MF	3500	3000	5500	≤19	0.80	4.1	5.0	3.0	4.9	66	53	69	69	138
150.0	150/1	P332_0500KX301_0030 MF	3500	3500	6000	≤19	0.75	4.1	5.0	3.0	5.0	64	50	75	75	150
200.0	200/1	P332_1000KX301_0020 MF	3500	3000	5500	≤19	0.80	4.1	5.0	3.0	4.3	66	46	60	60	120
210.0	210/1	P332_0700KX301_0030 MF	3500	3500	6000	≤19	0.75	4.1	5.0	3.0	4.9	64	53	69	69	138
300.0	300/1	P332_1000KX301_0030 MF	3500	3500	6000	≤19	0.75	4.1	5.0	3.0	4.3	64	46	60	60	120
P431KX ($M_{2acc,max}$ = 143 Nm)																
3.000	3/1	P431_0030KX401_0010 MF	2500	2000	4000	≤24	3.1	7.4	7.5	5.5	5.3	72	50	73	73	155
4.000	4/1	P431_0040KX401_0010 MF	2500	2000	4000	≤24	2.7	7.4	6.5	4.5	7.3	72	78	97	97	206
5.000	5/1	P431_0050KX401_0010 MF	2500	2000	4000	≤24	2.6	7.4	6.0	4.0	8.6	72	85	121	121	258
6.000	6/1	P431_0030KX401_0020 MF	2500	2500	5000	≤24	1.8	7.4	7.5	5.5	5.3	68	50	73	73	155
7.000	7/1	P431_0070KX401_0010 MF	2500	2000	4000	≤24	2.4	7.4	5.5	3.5	9.2	72	85	135	143	271
8.000	8/1	P431_0040KX401_0020 MF	2500	2500	5000	≤24	1.7	7.4	6.5	4.5	7.3	68	78	97	97	206
10.00	10/1	P431_0050KX401_0020 MF	2500	2500	5000	≤24	1.7	7.4	6.0	4.0	8.6	68	90	121	121	258
12.00	12/1	P431_0040KX401_0030 MF	3000	3000	5500	≤24	1.5	7.4	6.5	4.5	7.3	66	78	97	97	206
14.00	14/1	P431_0070KX401_0020 MF	2500	2500	5000	≤24	1.6	7.4	5.5	3.5	9.2	68	90	135	143	271
15.00	15/1	P431_0050KX401_0030 MF	3000	3000	5500	≤24	1.5	7.4	6.0	4.0	8.6	66	90	121	121	258
16.00	16/1	P431_0080KX401_0020 MF	2500	2500	5000	≤24	1.6	7.4	5.5	3.5	8.5	68	80	120	125	239
20.00	20/1	P431_0100KX401_0020 MF	2500	2500	5000	≤24	1.6	7.4	5.0	3.0	8.4	68	75	115	115	230
21.00	21/1	P431_0070KX401_0030 MF	3000	3000	5500	≤24	1.4	7.4	5.5	3.5	9.2	66	90	135	143	271
24.00	24/1	P431_0080KX401_0030 MF	3000	3000	5500	≤24	1.4	7.4	5.5	3.5	8.5	66	80	120	125	239
30.00	30/1	P431_0100KX401_0030 MF	3000	3000	5500	≤24	1.4	7.4	5.0	3.0	8.4	66	75	115	115	230
P432KX ($M_{2acc,max}$ = 139 Nm)																
32.00	32/1	P432_0160KX301_0020 MF	3500	3000	5500	≤19	0.83	6.1	5.5	3.5	11	66	89	130	130	260
35.00	35/1	P432_0350KX301_0010 MF	3000	2500	4500	≤19	1.0	6.1	5.5	3.5	12	70	102	133	138	266
40.00	40/1	P432_0200KX301_0020 MF	3500	3000	5500	≤19	0.83	6.1	5.5	3.5	12	66	95	134	139	268
50.00	50/1	P432_0250KX301_0020 MF	3500	3000	5500	≤19	0.82	6.1	5.5	3.5	12	66	100	134	139	268
56.00	56/1	P432_0280KX301_0020 MF	3500	3000	5500	≤19	0.81	6.1	5.5	3.5	12	66	95	130	130	260
60.00	60/1	P432_0200KX301_0030 MF	3500	3500	6000	≤19	0.76	6.1	5.5	3.5	12	64	95	134	139	268
64.00	64/1	P432_0320KX301_0020 MF	3500	3000	5500	≤19	0.83	6.1	5.5	3.5	9.4	66	90	126	131	253
70.00	70/1	P432_0350KX301_0020 MF	3500	3000	5500	≤19	0.81	6.1	5.5	3.5	12	66	102	133	138	266
75.00	75/1	P432_0250KX301_0030 MF	3500	3500	6000	≤19	0.75	6.1	5.5	3.5	12	64	100	134	139	268
80.00	80/1	P432_0400KX301_0020 MF	3500	3000	5500	≤19	0.81	6.1	5.5	3.5	12	66	87	130	130	260
84.00	84/1	P432_0280KX301_0030 MF	3500	3500	6000	≤19	0.75	6.1	5.5	3.5	12	64	95	130	130	260
100.0	100/1	P432_0500KX301_0020 MF	3500	3000	5500	≤19	0.81	6.1	5.0	3.0	12	66	102	132	138	264
105.0	105/1	P432_0350KX301_0030 MF	3500	3500	6000	≤19	0.75	6.1	5.5	3.5	12	64	102	133	138	266
120.0	120/1	P432_0400KX301_0030 MF	3500	3500	6000	≤19	0.75	6.1	5.5	3.5	12	64	87	130	130	260
140.0	140/1	P432_0700KX301_0020 MF	3500	3000	5500	≤19	0.81	6.1	5.0	3.0	11	66	97	127	127	253
150.0	150/1	P432_0500KX301_0030 MF	3500	3500	6000	≤19	0.75	6.1	5.0	3.0	12	64	102	132	138	264
200.0	200/1	P432_1000KX301_0020 MF	3500	3000	5500	≤19	0.81	6.1	5.0	3.0	9.0	66	85	110	110	220
210.0	210/1	P432_0700KX301_0030 MF	3500	3500	6000	≤19	0.75	6.1	5.0	3.0	11	64	97	127	127	253
300.0	300/1	P432_1000KX301_0030 MF	3500	3500	6000	≤19	0.75	6.1	5.0	3.0	9.0	64	85	110	110	220
P531KX ($M_{2acc,max}$ = 380 Nm)																
3.000	3/1	P531_0030KX501_0010 MF	2500	2000	3500	≤32	10	13	6.5	4.5	13	74	120	183	183	387
4.000	4/1	P531_0040KX501_0010 MF	2500	2000	3500	≤32	8.6	13	5.5	3.5	18	74	194	244	244	515
5.000	5/1	P531_0050KX501_0010 MF	2500	2000	3500	≤32	8.2	13	5.0	3.0	22	74	210	306	306	644
6.000	6/1	P531_0030KX501_0020 MF	2500	2500	4500	≤32	6.0	13	6.5	4.5	13	70	120	183	183	387
7.000	7/1	P531_0070KX501_0010 MF	2500	2000	3500	≤32	7.8	13	4.5	2.5	25	74	210	333	380	667
8.000	8/1	P531_0040KX501_0020 MF	2500	2500	4500	≤32	5.6	13	5.5	3.5	18	70	194	244	244	515
10.00	10/1	P531_0050KX501_0020 MF	2500	2500	4500	≤32	5.5	13	5.0	3.0	22	70	220	306	306	644
12.00	12/1	P531_0040KX501_0030 MF	3000	3000	5000	≤32	4.9	13	5.5	3.5	18	68	194	244	244	515
14.00	14/1	P531_0070KX501_0020 MF	2500	2500	4500	≤32	5.4	13	4.5	2.5	25	70	210	333	380	667
15.00	15/1	P531_0050KX501_0030 MF	3000	3000	5000	≤32	4.9	13	5.0	3.0	22	68	220	306	306	644

i	i_{exakt}	Type	n_{1MAXDB} EL1,2,5,6 [rpm]	n_{1MAXDB} EL3,4 [rpm]	n_{1MAXZB} [rpm]	d_{MW} [mm]	J_1 [kgcm²]	m [kg]	$\Delta\varphi_2$ [arcmin]	$\Delta\varphi_{2red}$ [arcmin]	C_2 [Nm/arcmin]	L_{pA} [dB(A)]	M_{2N} [Nm]	M_{2acc} [Nm]	M_{2accHT} [Nm]	M_{2NOT} [Nm]
P531KX ($M_{2acc,max}$ = 380 Nm)																
16.00	16/1	P531_0080KX501_0020 MF	2500	2500	4500	≤32	5.3	13	4.5	2.5	21	70	200	296	300	592
20.00	20/1	P531_0100KX501_0020 MF	2500	2500	4500	≤32	5.3	13	4.0	2.0	24	70	180	288	288	575
21.00	21/1	P531_0070KX501_0030 MF	3000	3000	5000	≤32	4.8	13	4.5	2.5	25	68	210	333	380	667
24.00	24/1	P531_0080KX501_0030 MF	3000	3000	5000	≤32	4.8	13	4.5	2.5	21	68	200	296	300	592
30.00	30/1	P531_0100KX501_0030 MF	3000	3000	5000	≤32	4.8	13	4.0	2.0	24	68	180	288	288	575
P532KX ($M_{2acc,max}$ = 364 Nm)																
32.00	32/1	P532_0160KX401_0020 MF	2500	2500	5000	≤24	1.7	12	4.5	2.5	29	68	220	300	300	600
35.00	35/1	P532_0350KX401_0010 MF	2500	2000	4000	≤24	2.5	12	4.5	2.5	32	72	270	352	352	704
40.00	40/1	P532_0200KX401_0020 MF	2500	2500	5000	≤24	1.7	12	4.5	2.5	31	68	250	355	364	710
50.00	50/1	P532_0250KX401_0020 MF	2500	2500	5000	≤24	1.7	12	4.5	2.5	31	68	260	355	357	710
56.00	56/1	P532_0280KX401_0020 MF	2500	2500	5000	≤24	1.7	12	4.5	2.5	31	68	231	300	300	600
60.00	60/1	P532_0200KX401_0030 MF	3000	3000	5500	≤24	1.5	12	4.5	2.5	31	66	250	355	364	710
64.00	64/1	P532_0320KX401_0020 MF	2500	2500	5000	≤24	1.7	12	4.5	2.5	25	68	240	312	363	624
70.00	70/1	P532_0350KX401_0020 MF	2500	2500	5000	≤24	1.6	12	4.5	2.5	32	68	270	352	352	704
75.00	75/1	P532_0250KX401_0030 MF	3000	3000	5500	≤24	1.5	12	4.5	2.5	31	66	260	355	357	710
80.00	80/1	P532_0400KX401_0020 MF	2500	2500	5000	≤24	1.6	12	4.5	2.5	31	68	214	300	300	600
84.00	84/1	P532_0280KX401_0030 MF	3000	3000	5500	≤24	1.4	12	4.5	2.5	31	66	231	300	300	600
100.0	100/1	P532_0500KX401_0020 MF	2500	2500	5000	≤24	1.6	12	4.0	2.0	32	68	269	352	352	704
105.0	105/1	P532_0350KX401_0030 MF	3000	3000	5500	≤24	1.4	12	4.5	2.5	32	66	270	352	352	704
120.0	120/1	P532_0400KX401_0030 MF	3000	3000	5500	≤24	1.4	12	4.5	2.5	31	66	214	300	300	600
140.0	140/1	P532_0700KX401_0020 MF	2500	2500	5000	≤24	1.6	12	4.0	2.0	30	68	263	345	357	690
150.0	150/1	P532_0500KX401_0030 MF	3000	3000	5500	≤24	1.4	12	4.0	2.0	32	66	269	352	352	704
200.0	200/1	P532_1000KX401_0020 MF	2500	2500	5000	≤24	1.6	12	4.0	2.0	26	68	221	288	288	575
210.0	210/1	P532_0700KX401_0030 MF	3000	3000	5500	≤24	1.4	12	4.0	2.0	30	66	263	345	357	690
300.0	300/1	P532_1000KX401_0030 MF	3000	3000	5500	≤24	1.4	12	4.0	2.0	26	66	221	288	288	575
P731KX ($M_{2acc,max}$ = 840 Nm)																
3.000	3/1	P731_0030KX701_0010 MF	1800	1600	3000	≤38	34	27	6.5	4.5	38	76	280	364	364	680
4.000	4/1	P731_0040KX701_0010 MF	1800	1600	3000	≤38	29	27	5.5	3.5	47	76	388	485	485	907
5.000	5/1	P731_0050KX701_0010 MF	1800	1600	3000	≤38	27	27	5.0	3.0	52	76	440	606	606	1134
6.000	6/1	P731_0030KX701_0020 MF	1800	1800	3500	≤38	17	27	6.5	4.5	38	72	291	364	364	773
7.000	7/1	P731_0070KX701_0010 MF	1800	1600	3000	≤38	26	27	4.5	2.5	54	76	440	805	840	1588
8.000	8/1	P731_0040KX701_0020 MF	1800	1800	3500	≤38	16	27	5.5	3.5	47	72	388	485	485	1031
10.00	10/1	P731_0050KX701_0020 MF	1800	1800	3500	≤38	15	27	5.0	3.0	52	72	440	606	606	1289
12.00	12/1	P731_0040KX701_0030 MF	2100	2100	4000	≤38	13	27	5.5	3.5	47	70	388	485	485	1031
14.00	14/1	P731_0070KX701_0020 MF	1800	1800	3500	≤38	15	27	4.5	2.5	54	72	440	805	840	1610
15.00	15/1	P731_0050KX701_0030 MF	2100	2100	4000	≤38	13	27	5.0	3.0	52	70	440	606	606	1289
16.00	16/1	P731_0080KX701_0020 MF	1800	1800	3500	≤38	15	27	4.5	2.5	53	72	400	668	700	1336
20.00	20/1	P731_0100KX701_0020 MF	1800	1800	3500	≤38	15	27	4.0	2.0	52	72	350	575	575	1150
21.00	21/1	P731_0070KX701_0030 MF	2100	2100	4000	≤38	13	27	4.5	2.5	54	70	440	805	840	1610
24.00	24/1	P731_0080KX701_0030 MF	2100	2100	4000	≤38	13	27	4.5	2.5	53	70	400	668	700	1336
30.00	30/1	P731_0100KX701_0030 MF	2100	2100	4000	≤38	12	27	4.0	2.0	52	70	350	575	575	1150
P732KX ($M_{2acc,max}$ = 805 Nm)																
32.00	32/1	P732_0160KX501_0020 MF	2500	2500	4500	≤32	5.6	22	4.5	2.5	59	70	450	700	700	1400
35.00	35/1	P732_0350KX501_0010 MF	2500	2000	3500	≤32	7.9	22	4.5	2.5	62	74	540	770	805	1540
40.00	40/1	P732_0200KX501_0020 MF	2500	2500	4500	≤32	5.5	22	4.5	2.5	60	70	460	805	805	1610
50.00	50/1	P732_0250KX501_0020 MF	2500	2500	4500	≤32	5.5	22	4.5	2.5	62	70	500	805	805	1610
56.00	56/1	P732_0280KX501_0020 MF	2500	2500	4500	≤32	5.4	22	4.5	2.5	62	70	538	700	700	1400
60.00	60/1	P732_0200KX501_0030 MF	3000	3000	5000	≤32	4.9	22	4.5	2.5	60	68	460	805	805	1610
64.00	64/1	P732_0320KX501_0020 MF	2500	2500	4500	≤32	5.5	22	4.5	2.5	56	70	470	730	730	1460
70.00	70/1	P732_0350KX501_0020 MF	2500	2500	4500	≤32	5.4	22	4.5	2.5	62	70	540	770	805	1540
75.00	75/1	P732_0250KX501_0030 MF	3000	3000	5000	≤32	4.9	22	4.5	2.5	62	68	500	805	805	1610
80.00	80/1	P732_0400KX501_0020 MF	2500	2500	4500	≤32	5.3	22	4.5	2.5	62	70	454	700	700	1400
84.00	84/1	P732_0280KX501_0030 MF	3000	3000	5000	≤32	4.8	22	4.5	2.5	62	68	538	700	700	1400
100.0	100/1	P732_0500KX501_0020 MF	2500	2500	4500	≤32	5.3	22	4.0	2.0	62	70	565	770	805	1540
105.0	105/1	P732_0350KX501_0030 MF	3000	3000	5000	≤32	4.8	22	4.5	2.5	62	68	540	770	805	1540
120.0	120/1	P732_0400KX501_0030 MF	3000	3000	5000	≤32	4.8	22	4.5	2.5	62	68	454	700	700	1400
140.0	140/1	P732_0700KX501_0020 MF	2500	2500	4500	≤32	5.3	22	4.0	2.0	59	70	584	762	799	1525
150.0	150/1	P732_0500KX501_0030 MF	3000	3000	5000	≤32	4.8	22	4.0	2.0	62	68	565	770	805	1540
200.0	200/1	P732_1000KX501_0020 MF	2500	2500	4500	≤32	5.3	22	4.0	2.0	54	70	423	550	550	1100
210.0	210/1	P732_0700KX501_0030 MF	3000	3000	5000	≤32	4.8	22	4.0	2.0	59	68	584	762	799	1525
300.0	300/1	P732_1000KX501_0030 MF	3000	3000	5000	≤32	4.8	22	4.0	2.0	54	68	423	550	550	1100

i	i_{exakt}	Type	n_{1MAXDB} EL1,2,5,6 [rpm]	n_{1MAXDB} EL3,4 [rpm]	n_{1MAXZB} [rpm]	d_{MW} [mm]	J_1 [kgcm²]	m [kg]	$\Delta\varphi_2$ [arcmin]	$\Delta\varphi_{2red}$ [arcmin]	C_2 [Nm/arcmin]	L_{pA} [dB(A)]	M_{2N} [Nm]	M_{2acc} [Nm]	M_{2accHT} [Nm]	M_{2NOT} [Nm]
P831KX ($M_{2acc,max}$ = 1213 Nm)																
3.000	3/1	P831_0030KX701_0010 MF	1800	1600	3000	≤38	67	42	6.5	4.5	59	76	291	364	364	680
4.000	4/1	P831_0040KX701_0010 MF	1800	1600	3000	≤38	43	42	5.5	3.5	84	76	388	485	485	907
5.000	5/1	P831_0050KX701_0010 MF	1800	1600	3000	≤38	36	42	5.0	3.0	104	76	485	606	606	1134
6.000	6/1	P831_0030KX701_0020 MF	1800	1800	3500	≤38	25	42	6.5	4.5	59	72	291	364	364	773
7.000	7/1	P831_0070KX701_0010 MF	1800	1600	3000	≤38	31	42	4.5	2.5	125	76	679	849	849	1588
8.000	8/1	P831_0040KX701_0020 MF	1800	1800	3500	≤38	19	42	5.5	3.5	84	72	388	485	485	1031
10.00	10/1	P831_0050KX701_0020 MF	1800	1800	3500	≤38	17	42	5.0	3.0	104	72	485	606	606	1289
12.00	12/1	P831_0040KX701_0030 MF	2100	2100	4000	≤38	14	42	5.5	3.5	84	70	388	485	485	1031
14.00	14/1	P831_0070KX701_0020 MF	1800	1800	3500	≤38	16	42	4.5	2.5	125	72	679	849	849	1804
15.00	15/1	P831_0050KX701_0030 MF	2100	2100	4000	≤38	14	42	5.0	3.0	104	70	485	606	606	1289
16.00	16/1	P831_0080KX701_0020 MF	1800	1800	3500	≤38	16	42	4.5	2.5	128	72	776	970	970	2062
20.00	20/1	P831_0100KX701_0020 MF	1800	1800	3500	≤38	15	42	4.0	2.0	130	72	850	1213	1213	2577
21.00	21/1	P831_0070KX701_0030 MF	2100	2100	4000	≤38	13	42	4.5	2.5	125	70	679	849	849	1804
24.00	24/1	P831_0080KX701_0030 MF	2100	2100	4000	≤38	13	42	4.5	2.5	128	70	776	970	970	2062
30.00	30/1	P831_0100KX701_0030 MF	2100	2100	4000	≤38	13	42	4.0	2.0	130	70	850	1213	1213	2577
P832KX ($M_{2acc,max}$ = 2000 Nm)																
32.00	32/1	P832_0160KX701_0020 MF	1800	1800	3500	≤38	16	47	4.5	2.5	163	72	1100	1600	1600	3200
35.00	35/1	P832_0350KX701_0010 MF	1800	1600	3000	≤38	26	47	4.5	2.5	173	76	1415	1840	2000	3230
40.00	40/1	P832_0200KX701_0020 MF	1800	1800	3500	≤38	16	47	4.5	2.5	169	72	1250	1840	2000	3230
50.00	50/1	P832_0250KX701_0020 MF	1800	1800	3500	≤38	15	47	4.5	2.5	172	72	1300	1840	2000	3230
56.00	56/1	P832_0280KX701_0020 MF	1800	1800	3500	≤38	15	47	4.5	2.5	168	72	1100	1600	1600	3200
60.00	60/1	P832_0200KX701_0030 MF	2100	2100	4000	≤38	13	47	4.5	2.5	169	70	1250	1840	2000	3230
64.00	64/1	P832_0320KX701_0020 MF	1800	1800	3500	≤38	16	47	4.5	2.5	157	72	1173	1525	1595	3049
70.00	70/1	P832_0350KX701_0020 MF	1800	1800	3500	≤38	15	47	4.5	2.5	173	72	1415	1840	2000	3230
75.00	75/1	P832_0250KX701_0030 MF	2100	2100	4000	≤38	13	47	4.5	2.5	172	70	1300	1840	2000	3230
80.00	80/1	P832_0400KX701_0020 MF	1800	1800	3500	≤38	15	47	4.5	2.5	166	72	1097	1600	1600	3200
84.00	84/1	P832_0280KX701_0030 MF	2100	2100	4000	≤38	13	47	4.5	2.5	168	70	1100	1600	1600	3200
100.0	100/1	P832_0500KX701_0020 MF	1800	1800	3500	≤38	15	47	4.0	2.0	172	72	1415	1840	2000	3230
105.0	105/1	P832_0350KX701_0030 MF	2100	2100	4000	≤38	13	47	4.5	2.5	173	70	1415	1840	2000	3230
120.0	120/1	P832_0400KX701_0030 MF	2100	2100	4000	≤38	13	47	4.5	2.5	166	70	1097	1600	1600	3200
140.0	140/1	P832_0700KX701_0020 MF	1800	1800	3500	≤38	15	47	4.0	2.0	163	72	1238	1610	1610	3220
150.0	150/1	P832_0500KX701_0030 MF	2100	2100	4000	≤38	12	47	4.0	2.0	172	70	1415	1840	2000	3230
200.0	200/1	P832_1000KX701_0020 MF	1800	1800	3500	≤38	15	47	4.0	2.0	148	72	1015	1320	1320	2640
210.0	210/1	P832_0700KX701_0030 MF	2100	2100	4000	≤38	12	47	4.0	2.0	163	70	1238	1610	1610	3220
300.0	300/1	P832_1000KX701_0030 MF	2100	2100	4000	≤38	12	47	4.0	2.0	148	70	1015	1320	1320	2640
P932KX ($M_{2acc,max}$ = 3300 Nm)																
16.00	16/1	P932_0160KX701_0010 MF	1800	1600	3000	≤38	44	72	4.5	–	348	76	1520	1900	–	3705
20.00	20/1	P932_0200KX701_0010 MF	1800	1600	3000	≤38	43	72	4.5	–	368	76	1900	2375	–	4632
25.00	25/1	P932_0250KX701_0010 MF	1800	1600	3000	≤38	36	72	4.5	–	381	76	2375	2969	–	5789
28.00	28/1	P932_0280KX701_0010 MF	1800	1600	3000	≤38	31	72	4.5	–	381	76	2280	3000	–	6000
32.00	32/1	P932_0160KX701_0020 MF	1800	1800	3500	≤38	20	72	4.5	–	348	72	1520	1900	–	4211
35.00	35/1	P932_0350KX701_0010 MF	1800	1600	3000	≤38	30	72	4.5	–	391	76	2376	3300	–	6600
40.00	40/1	P932_0200KX701_0020 MF	1800	1800	3500	≤38	19	72	4.5	–	368	72	1900	2375	–	5263
50.00	50/1	P932_0250KX701_0020 MF	1800	1800	3500	≤38	17	72	4.5	–	381	72	2375	2969	–	6579
56.00	56/1	P932_0280KX701_0020 MF	1800	1800	3500	≤38	16	72	4.5	–	381	72	2280	3000	–	6000
60.00	60/1	P932_0200KX701_0030 MF	2100	2100	4000	≤38	14	72	4.5	–	368	70	1900	2375	–	5263
70.00	70/1	P932_0350KX701_0020 MF	1800	1800	3500	≤38	16	72	4.5	–	391	72	2376	3300	–	6600
75.00	75/1	P932_0250KX701_0030 MF	2100	2100	4000	≤38	14	72	4.5	–	381	70	2375	2969	–	6579
80.00	80/1	P932_0400KX701_0020 MF	1800	1800	3500	≤38	15	72	4.5	–	384	72	2000	3000	–	6000
84.00	84/1	P932_0280KX701_0030 MF	2100	2100	4000	≤38	13	72	4.5	–	381	70	2280	3000	–	6000
100.0	100/1	P932_0500KX701_0020 MF	1800	1800	3500	≤38	15	72	4.0	–	393	72	2295	3200	–	6400
105.0	105/1	P932_0350KX701_0030 MF	2100	2100	4000	≤38	13	72	4.5	–	391	70	2376	3300	–	6600
120.0	120/1	P932_0400KX701_0030 MF	2100	2100	4000	≤38	13	72	4.5	–	384	70	2000	3000	–	6000
140.0	140/1	P932_0700KX701_0020 MF	1800	1800	3500	≤38	15	72	4.0	–	369	72	2387	3156	–	6312
150.0	150/1	P932_0500KX701_0030 MF	2100	2100	4000	≤38	13	72	4.0	–	393	70	2295	3200	–	6400
200.0	200/1	P932_1000KX701_0020 MF	1800	1800	3500	≤38	15	72	4.0	–	320	72	1692	2200	–	4400
210.0	210/1	P932_0700KX701_0030 MF	2100	2100	4000	≤38	13	72	4.0	–	369	70	2387	3156	–	6312
300.0	300/1	P932_1000KX701_0030 MF	2100	2100	4000	≤38	13	72	4.0	–	320	70	1692	2200	–	4400

10.3 Dimensional drawings

In this chapter, you can find the dimensions of the gear units as well as example dimensions of the mountable motor adapters.

Dimensions can exceed the specifications of ISO 2768-mK due to casting tolerances or accumulation of individual tolerances.

We reserve the right to make dimensional changes due to ongoing technical development.

You can download 3D models of our standard drives at http://configurator.stoeber.de.

Tolerances

Solid shaft	Tolerance
Fit	ISO k6
Feather keys	DIN 6885-1, high form A
Balancing	With half feather key

Centering holes in solid shafts in accordance with DIN 332-2, DR shape

Thread size	M4	M5	M6	M8	M10	M12	M16	M20	M24
Thread depth [mm]	10	12.5	16	19	22	28	36	42	50

10.3.1 G shaft design (solid shaft without feather key)

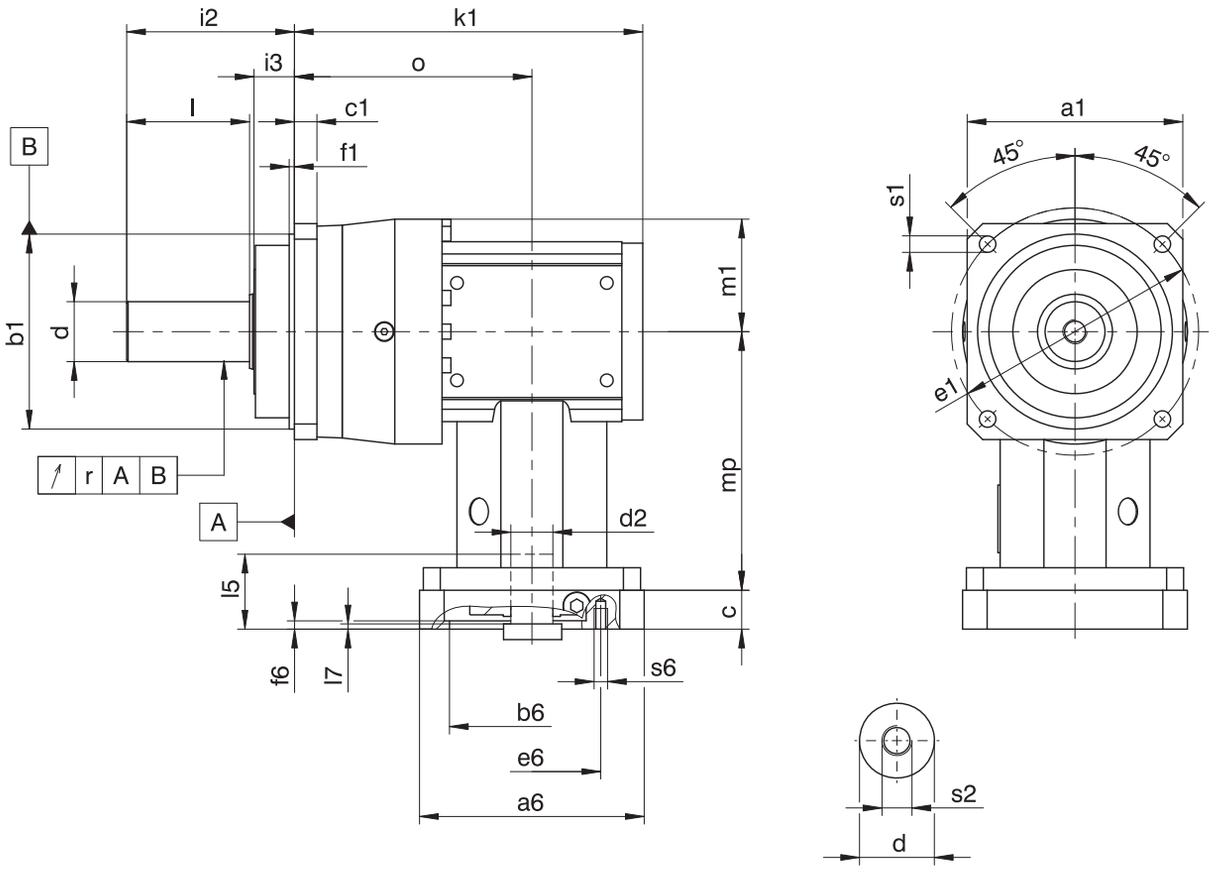

– The radial runout specification applies only to the reinforced bearing D.

Dimensions of gear units

Type	□a1	Øb1	c1	Ød	Øe1	f1	i2	i3	k1	l	m1	r	o	Øs1	s2
P231_KX301_	55	50_{h6}	6	12_{k6}	63	7.0	36	12	124.0	22	31	–	84.0	5.5	M4
P232_KX301_	55	50_{h6}	6	12_{k6}	63	7.0	36	12	156.0	22	31	–	116.0	5.5	M4
P331_KX301_	72	60_{h6}	7	16_{k6}	75	7.5	48	18	131.0	28	36	0.025	91.0	5.5	M5
P332_KX301_	72	60_{h6}	7	16_{k6}	75	7.5	48	18	165.5	28	36	0.025	125.5	5.5	M5
P431_KX401_	76	70_{h6}	9	22_{k6}	85	7.5	56	18	165.0	36	49	0.025	115.0	6.6	M8
P432_KX301_	76	70_{h6}	9	22_{k6}	85	7.5	56	18	180.0	36	49	0.025	140.0	6.6	M8
P531_KX501_	101	90_{h6}	10	32_{k6}	120	15.0	88	28	187.5	58	57	0.030	128.5	9.0	M12
P532_KX401_	101	90_{h6}	10	32_{k6}	120	15.0	88	28	207.0	58	57	0.030	157.0	9.0	M12
P731_KX701_	144	130_{h6}	15	40_{k6}	165	3.5	112	27	232.5	82	72	0.035	158.5	11.0	M16
P732_KX501_	144	130_{h6}	15	40_{k6}	165	3.5	112	27	255.5	82	72	0.035	196.5	11.0	M16
P831_KX701_	190	160_{h6}	15	55_{k6}	215	10.0	112	27	267.0	82	95	0.035	193.0	13.5	M20
P832_KX701_	190	160_{h6}	15	55_{k6}	215	10.0	112	27	324.5	82	95	0.035	250.5	13.5	M20
P932_KX701_	212	180_{h6}	17	75_{k6}	250	10.0	143	34	388.0	105	113	0.040	314.0	17.5	M20

Example dimensions for the motor connection

Type	Øb6	Øe6	Ød2max	l5	□a6	c	f6	l7	s6
P_KX301_MF	60^{H7}	75	19	40	75	18	3.5	5.5	M5
P_KX401_MF	95^{H7}	115	24	42	100	21	4.0	4.5	M8
P_KX501_MF	110^{H7}	130	32	53	120	24	4.0	5.0	M8
P_KX701_MF	130^{H7}	165	38	64	150	26	5.5	8.0	M10

In the table above, you will find example dimensions for the motor connection for the MF motor adapter. **Note that when dimension c is lengthened (depending on the motor used), dimensions c6, l5 and lg are also lengthened accordingly.**

You will find additional motor connection dimensions for the MF motor adapter in our STOBER Configurator at http://configurator.stoeber.de. Here, you can directly download a 3D model of your drive.

10.3.2 P shaft design (solid shaft with feather key)

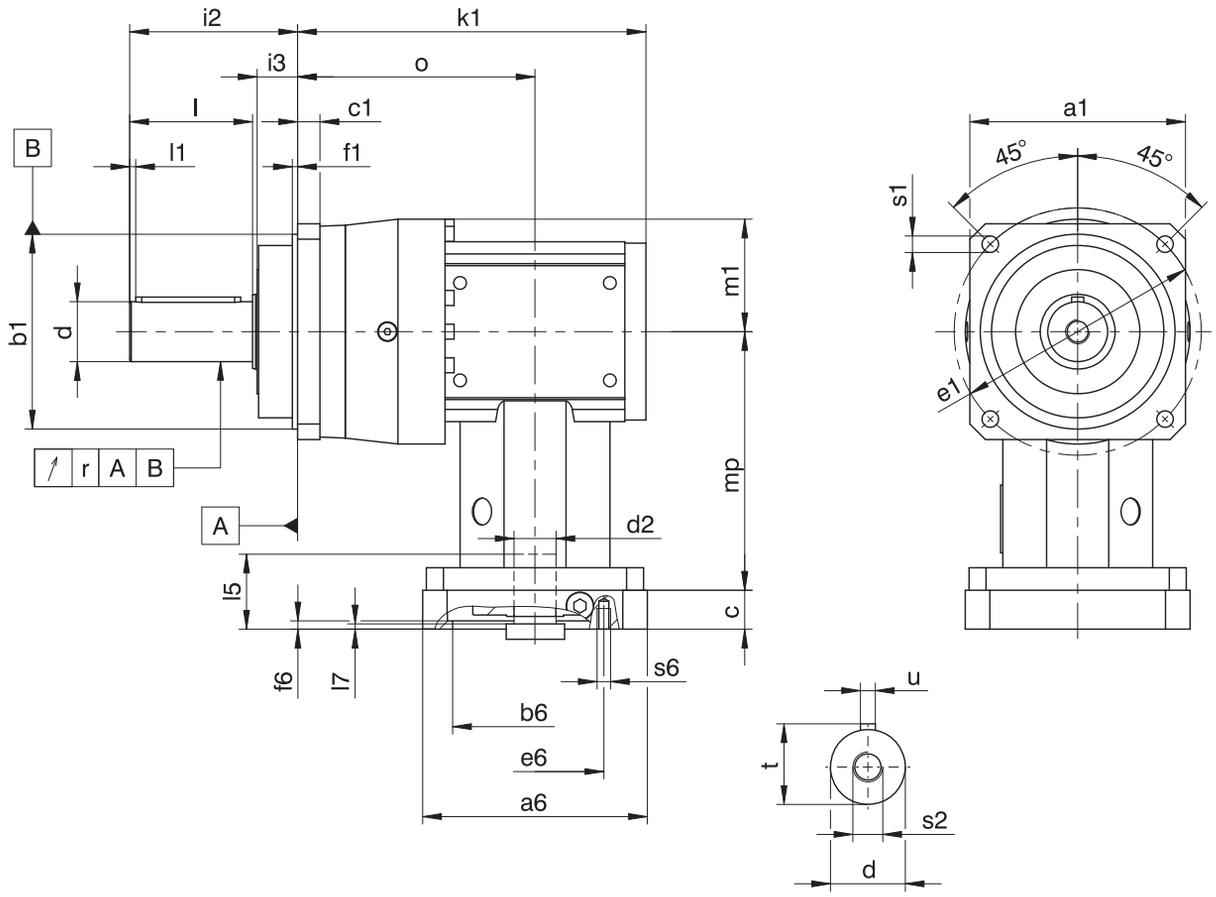

– The radial runout specification applies only to the reinforced bearing D.

Dimensions of gear units

Type	□a1	Øb1	c1	Ød	Øe1	f1	i2	i3	k1	l	l1	m1	o	r	Øs1	s2	t	u
P231_KX301_	55	50_{h6}	6	12_{k6}	63	7.0	36	12	124.0	22	2	31	84.0	–	5.5	M4	13.5	A4×4×18
P232_KX301_	55	50_{h6}	6	12_{k6}	63	7.0	36	12	156.0	22	2	31	116.0	–	5.5	M4	13.5	A4×4×18
P331_KX301_	72	60_{h6}	7	16_{k6}	75	7.5	48	18	131.0	28	2	36	91.0	0.025	5.5	M5	18.0	A5×5×22
P332_KX301_	72	60_{h6}	7	16_{k6}	75	7.5	48	18	165.5	28	2	36	125.5	0.025	5.5	M5	18.0	A5×5×22
P431_KX401_	76	70_{h6}	9	22_{k6}	85	7.5	56	18	165.0	36	3	49	115.0	0.025	6.6	M8	24.5	A6×6×28
P432_KX301_	76	70_{h6}	9	22_{k6}	85	7.5	56	18	180.0	36	3	49	140.0	0.025	6.6	M8	24.5	A6×6×28
P531_KX501_	101	90_{h6}	10	32_{k6}	120	15.0	88	28	187.5	58	3	57	128.5	0.030	9.0	M12	35.0	A10×8×50
P532_KX401_	101	90_{h6}	10	32_{k6}	120	15.0	88	28	207.0	58	3	57	157.0	0.030	9.0	M12	35.0	A10×8×50
P731_KX701_	144	130_{h6}	15	40_{k6}	165	3.5	112	27	232.5	82	4	72	158.5	0.035	11.0	M16	43.0	A12×8×70
P732_KX501_	144	130_{h6}	15	40_{k6}	165	3.5	112	27	255.5	82	4	72	196.5	0.035	11.0	M16	43.0	A12×8×70
P831_KX701_	190	160_{h6}	15	55_{k6}	215	10.0	112	27	267.0	82	6	95	193.0	0.035	13.5	M20	59.0	A16×10×70
P832_KX701_	190	160_{h6}	15	55_{k6}	215	10.0	112	27	324.5	82	6	95	250.5	0.035	13.5	M20	59.0	A16×10×70
P932_KX701_	212	180_{h6}	17	75_{k6}	250	10.0	143	34	388.0	105	7	113	314.0	0.040	17.5	M20	79.5	A20×12×90

Example dimensions for the motor connection

Type	Øb6	Øe6	Ød2max	l5	□a6	c	f6	l7	s6
P_KX301_MF	60^{H7}	75	19	40	75	18	3.5	5.5	M5
P_KX401_MF	95^{H7}	115	24	42	100	21	4.0	4.5	M8
P_KX501_MF	110^{H7}	130	32	53	120	24	4.0	5.0	M8
P_KX701_MF	130^{H7}	165	38	64	150	26	5.5	8.0	M10

In the table above, you will find example dimensions for the motor connection for the MF motor adapter. **Note that when dimension c is lengthened (depending on the motor used), dimensions c6, l5 and lg are also lengthened accordingly.**

You will find additional motor connection dimensions for the MF motor adapter in our STOBER Configurator at http://configurator.stoeber.de. Here, you can directly download a 3D model of your drive.

10.4 Type designation

In this chapter, you can find an explanation of the type designation with the associated options.

Additional ordering information not included in the type designation can be found at the end of the chapter.

Example code

P	7	3	1	S	G	S	S	0050	KX701VF	0030	MF

Explanation

Code	Designation	Design
P	Type	Planetary gear unit
7	Size	7 (example)
3	Generation	Generation 3
1 2	Stages	Single-stage Two-stage
S	Housing	Standard
G P	Shaft	Solid shaft without feather key Solid shaft with feather key
S D Z	Bearing	Standard bearing Axially reinforced bearing (P3 – P9) Radially reinforced bearing (P3 – P9)[1]
S R	Backlash	Standard Reduced
0050	Transmission ratio of output (i x 10)	i = 5 (example)
KX701 **VF**	Input	KX7 right-angle geared motor (example)
0030	Transmission ratio of input (i x 10)	i = 3 (example)
MF	Motor adapter	Motor adapter with FlexiAdapt coupling

In order to complete the type designation, also specify:

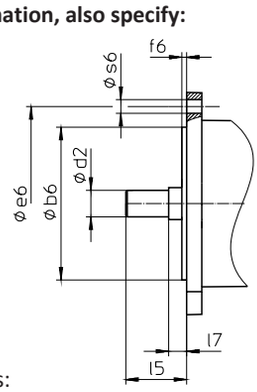

- Motor type or motor dimensions:

  To choose a suitable motor connection, use the STOBER Configurator at http://configurator.stoeber.de and choose your motor or the dimensions of the motor connection.
- Mounting position, see the chapter [▸ 10.5.4]
- Position of locking screw access, see the chapter [▸ 10.5.6]
- Radial shaft seal rings at the output made of NBR or FKM (option), see the chapter [▸ 10.6.4]
- Reverse operation of the output shaft from ±20° to ±90° and horizontal installation, note the chapter [▸ 10.6.5]
- Socket wrench insert for mounting the motor on the gear unit using the MF motor adapter (optional)

[1] Not for reduced-backlash option.

10.4.1 Nameplate

An example gear unit nameplate is explained in the figure below.

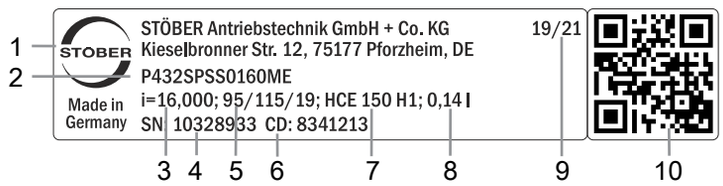

Code	Designation
1	Name of manufacturer
2	Type designation
3	Gear ratio of the gear unit
4	Serial number of the gear unit
5	Dimensions of the motor adapter (diameter of pilot/bolt circle/motor shaft)
6	Customer-specific data
7	Lubricant specification
8	Lubricant fill volume
9	Date of manufacture (year/calendar week)
10	QR code (link to product information)

10.4.1.1 Supporting documents

You can view or download supporting documents for the product by reading off the serial number on the nameplate of the product and entering it at the following address online:
https://id.stober.com

Alternatively, you can use a suitable mobile device to scan in the QR code on the nameplate of the product in order to be linked to the supporting documents.

10.5 Product description

10.5.1 Input options

MF motor adapter for attaching synchronous servo motors

http://www.stoeber.de/en/PKXMF

EZ synchronous servo motor

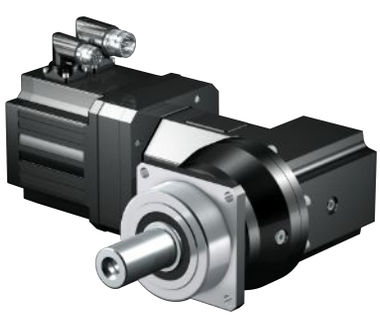

http://www.stoeber.de/en/PKXEZ

LM Lean motor

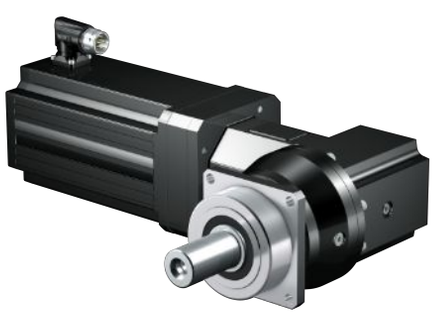

http://www.stoeber.de/en/PKXLM

10.5.2 Motor adapter with FlexiAdapt coupling (MF)

In this chapter, you will find a description of the FlexiAdapt coupling.

Properties:

- Fast and easy motor attachment
- With integrated thermal length compensation, compensates for linear expansion of the motor shaft
- Motor shaft decoupled from axial forces
- Large motor shaft diameter range
- Error-free, thanks to exact centering of the motor

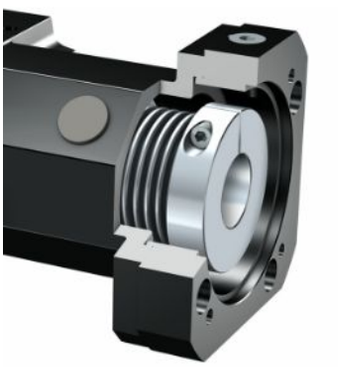

Fig. 1: FlexiAdapt coupling

10.5.3 Installation conditions

The specified torques and forces only apply when gear units are fastened on the machine side using screws of strength class 12.9. In addition, the gear housings must be adjusted at the pilot. The machine-side fit must be H7.

10.5.4 Mounting positions

The following table shows the standard mounting positions.

The numbers identify the gear unit sides. The mounting position is defined by the gear side facing downwards.

EL1	EL2	EL3
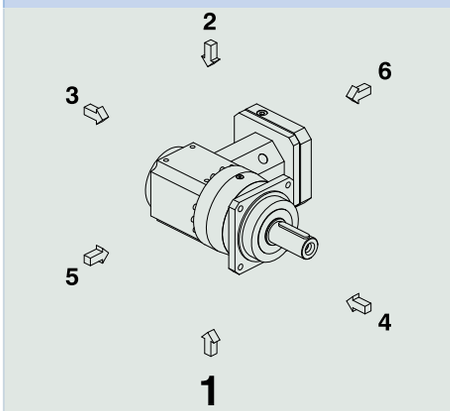	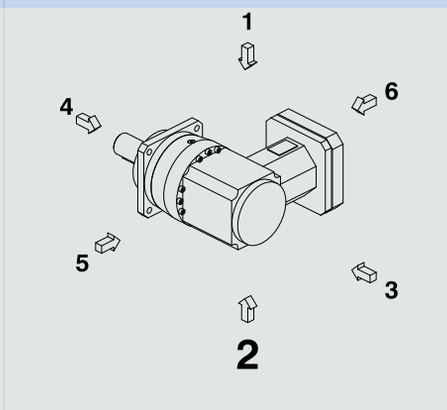	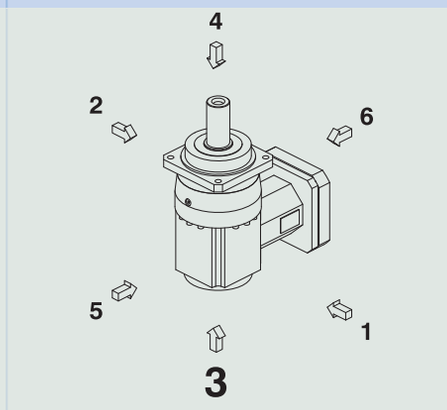
EL4	**EL5**	**EL6**
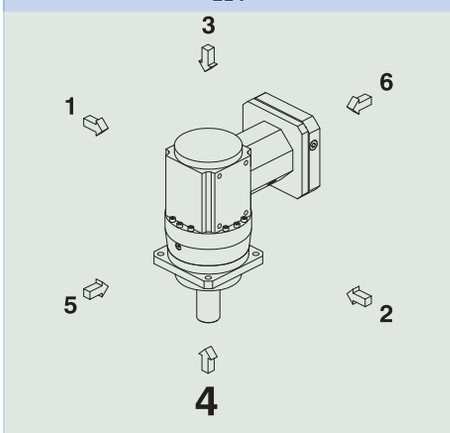	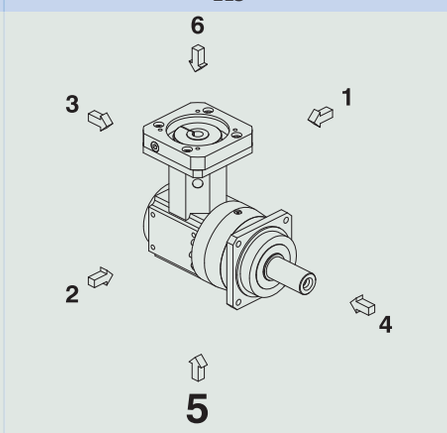	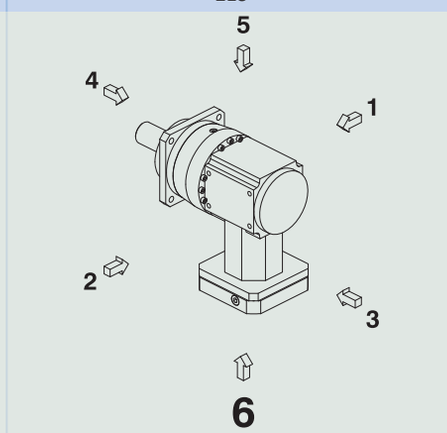

Since the lubricant filling volume of the gear unit depends on the mounting position, the mounting position must be specified when ordering.

10.5.5 Lubricants

STOBER fills the gear units with the amount and type of lubricant specified on the nameplate. The filling volume and the structure of the gear units depend on the mounting position.

Only install the gear units in the intended mounting position! Reposition the gear units only after consulting STOBER. Otherwise, STOBER assumes no liability for the gear units.

You will receive lubricants for use in the food industry upon request.

10.5.6 Position of locking screw access

Mounting position EL1	Mounting position EL4
Locking screw in 270° position (standard)	Locking screw in 270° position (standard)
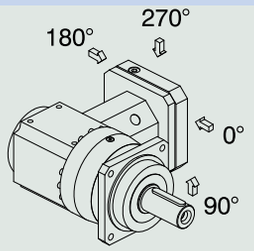	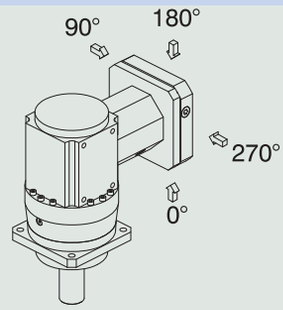

Indicate variations for your gear unit in the order.

Note that the access hole for the locking screw also rotates when the gear unit is rotated to another mounting position.

10.5.7 Other product features

Feature	Value
Max. permitted gear unit temperature (on the surface of the gear unit)	≤ 90 °C
Paint	Black RAL 9005
Explosion-proof design in accordance with (ATEX) Directive 2014/34/EU (optional)	Available, see Document ID 441677_en
Efficiency:	
η_{get} two-stage	96%
η_{get} three-stage	94%
Protection class: [2]	IP65

10.5.8 Direction of rotation

P_KX3 – P_KX5_	P_KX7
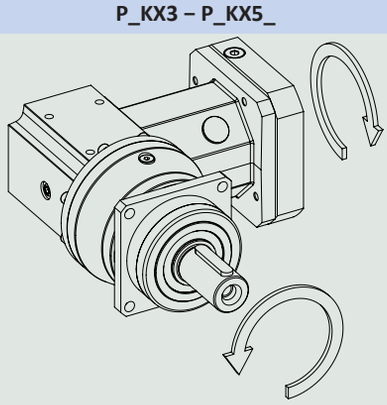	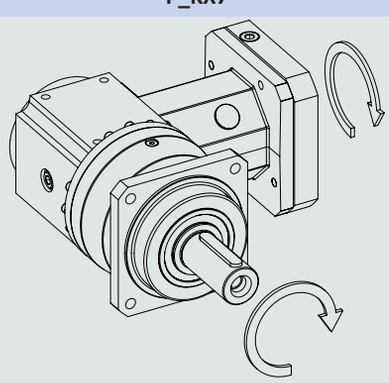

The pictures show mounting position EL1.

10.6 Project configuration

Project your drives using our SERVOsoft designing software. Download SERVOsoft for free at https://www.stoeber.de/en/ServoSoft.

Observe the limit conditions in this chapter to ensure a safe design for your drives.

An explanation of the formula symbols can be found in the chapter [▸ 18.1].

[2] Observe the protection class of all the components.

10.6.1 Drive selection

The formula symbols for values actually present in the application are marked with *.

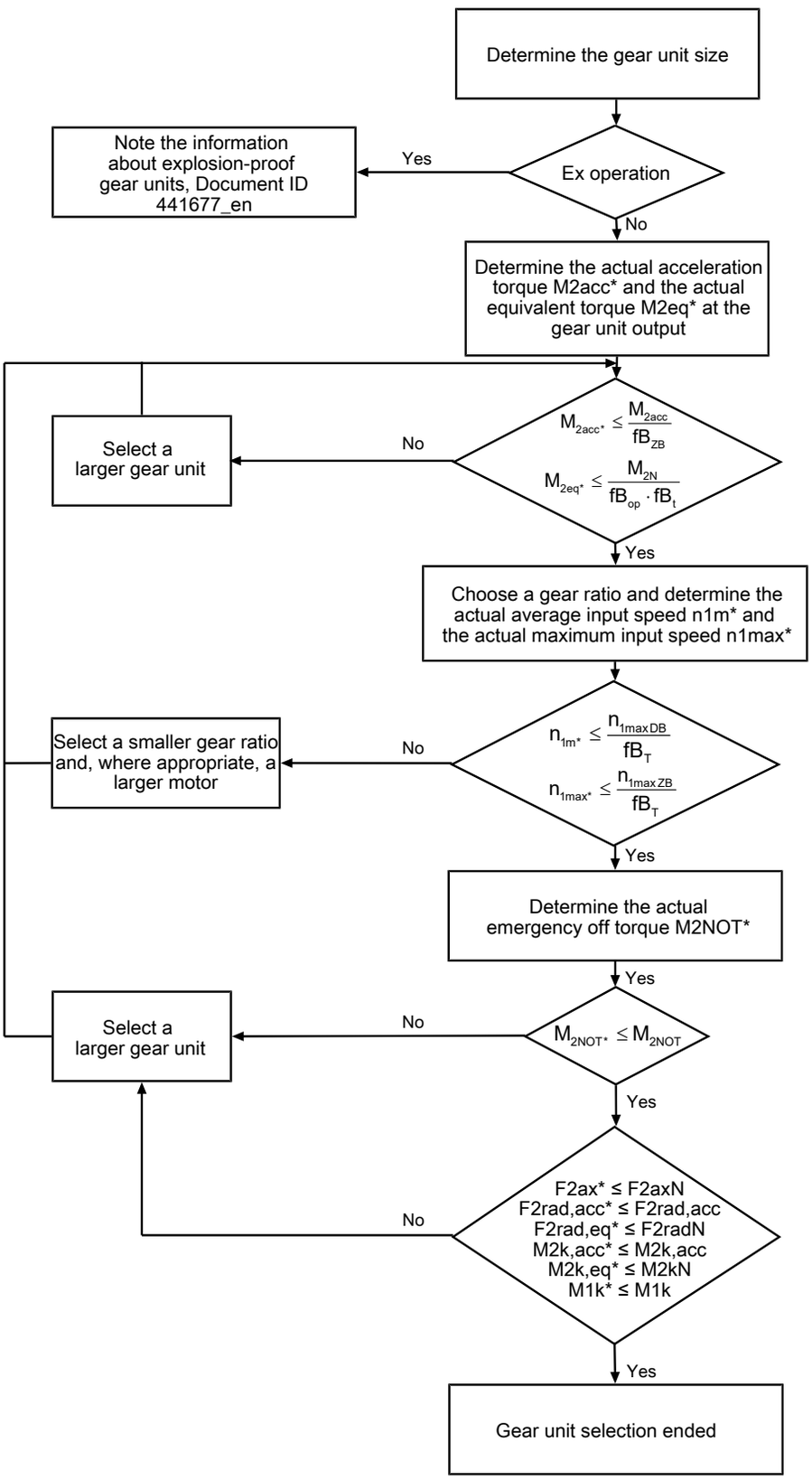

Calculate the forces and tilting torques in the chapter Permitted shaft loads.

Refer to the selection tables for the values for i, n_{1maxDB}, n_{1maxZB}, M_{2acc} (M_{2accHT} for reduced backlash), M_{2NOT} and M_{2N}.

The values for fB_T, fB_{op}, fB_t and fB_{ZB} can be found in the corresponding tables in this chapter.

Example of cyclic operation

The following calculations are based on a representation of the power taken from the output based in accordance with the following example:

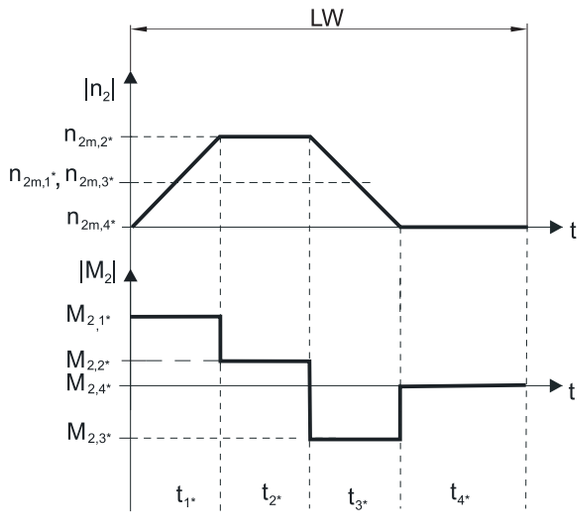

Calculation of the actual maximum acceleration torque

$$M_{2acc*} = J_{tot} \cdot \frac{\Delta n_2}{9.55 \cdot \Delta t} + M_{L*}$$

Calculation of the actual average input speed

$$n_{1m*} = n_{2m*} \cdot i$$

$$n_{2m*} = \frac{|n_{2m,1*}| \cdot t_{1*} + \ldots + |n_{2m,n*}| \cdot t_{n*}}{t_{1*} + \ldots + t_{n*}}$$

If $t_{1*} + \ldots + t_{3*} \geq 6$ min, calculate n_{2m*} without the rest phase t_{4*}.

The values for the ratio i can be found in the selection tables.

Calculation of the actual emergency-off torque

$$M_{2NOT*} = J_{tot} \cdot \frac{\Delta n_2}{9.55 \cdot \Delta t} + M_{L*}$$

Calculation of the actual equivalent torque

$$M_{2eq*} = \sqrt[3]{\frac{|n_{2m,1*}| \cdot t_{1*} \cdot |M_{2,1*}{}^3| + \ldots + |n_{2m,n*}| \cdot t_{n*} \cdot |M_{2,n*}{}^3|}{|n_{2m,1*}| \cdot t_{1*} + \ldots + |n_{2m,n*}| \cdot t_{n*}}}$$

Operating factors

Operating mode	fB_{op}
Uniform continuous operation	1.00
Cyclic operation	1.25
Reversing load cyclic operation	1.40

Run time	fB_t
Daily runtime ≤ 8 h	1.00
Daily runtime ≤ 16 h	1.15
Daily runtime ≤ 24 h	1.20

Cyclic operation	fB_{ZB}
≤ 1000 load changes/hour (LW/h)	1.00
> 1000 load changes/hour (LW/h)	1.15

Temperature		fB_T
Motor cooling	**Surrounding temperature**	
Motor with forced ventilation	≤ 20 °C	0.9
	≤ 30 °C	1.0
	≤ 40 °C	1.15
Motor with convection cooling	≤ 20 °C	1.0
	≤ 30 °C	1.1
	≤ 40 °C	1.25

Notes

- The maximum permitted gear unit temperature of ≤ 90 °C must not be exceeded. Doing so may result in damage to the gear unit.
- M_{2acc}, M_{2accHT}: Solid shaft design without feather key (we generally recommend this shaft design for cyclic operation)

10.6.2 Permitted shaft loads for the output shaft

The values specified in the tables apply to the permitted shaft loads:

- For shaft dimensions in accordance with the catalog
- For output speeds n_{2m*} ≤ 100 rpm ($F^{2axN} = F_{2ax100}$; $F_{2radN} = F_{2rad100}$; $M_{2kN} = M_{2k100}$)
- Only if radial forces on the gear unit are stabilized by its pilots (housing, flange shaft)

Permitted shaft loads for standard bearing S

Type	z_2 [mm]	F_{2ax100} [N]	$F_{2rad100}$ [N]	$F_{2rad,acc}$ [N]	M_{2k100} [Nm]	$M_{2k,acc}$ [Nm]
P2	17.0	500	1200	1300	34	36
P3	17.5	1000	2500	2500	79	79
P4	18.5	1500	4000	4500	146	164
P5	19.5	2300	6500	7000	315	340
P7	23.0	2900	8500	9000	544	576
P8	24.5	4700	13000	18000	852	1179
P9	33.0	6000	18000	27000	1539	2309

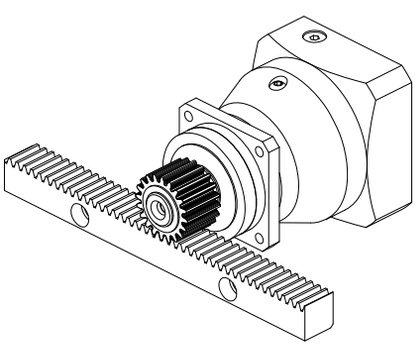

Fig. 2: Recommendation for bearing assignment S (e.g. for straight-cut gearing)

Permitted shaft loads for axially reinforced bearing D

Type	z_2 [mm]	F_{2ax100} [N]	$F_{2rad100}$ [N]	$F_{2rad,acc}$ [N]	M_{2k100} [Nm]	$M_{2k,acc}$ [Nm]
P3	20.0	2500	2750	2750	94	94
P4	22.5	4000	4500	5000	182	203
P5	25.5	6000	7000	8000	382	436
P7	29.0	10000	9500	10000	665	700
P8	32.0	15500	15000	18000	1095	1314
P9	44.0	25000	20000	30000	1930	2895

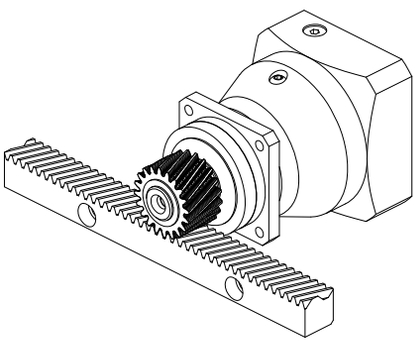

Fig. 3: Recommendation for bearing assignment D (e.g. for helical gearing)

Permitted shaft loads for radially reinforced bearing Z

Type	z_2 [mm]	F_{2ax100} [N]	$F_{2rad100}$ [N]	$F_{2rad,acc}$ [N]	M_{2k100} [Nm]	$M_{2k,acc}$ [Nm]
P3	17.5	600	3000	3000	95	95
P4	18.5	1000	5000	5000	183	183
P5	19.5	1600	8000	8000	388	388
P7	23.0	2000	10000	10000	640	640
P8	24.5	3600	18000	18000	1179	1179
P9	33.0	5000	27000	35000	2309	2993

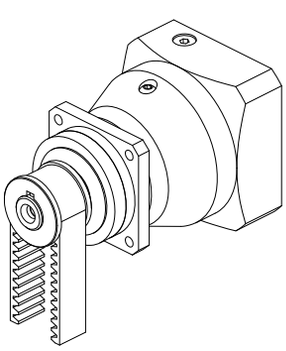

Fig. 4: Recommendation for bearing assignment Z (e.g. for belt drives)

For other output speeds, download diagrams at http://configurator.stoeber.de.

The following applies to output speeds n_{2m*} > 100 rpm:

$$F_{2axN} = \frac{F_{2ax100}}{\sqrt[3]{\frac{n_{2m*}}{100\ \text{rpm}}}} \qquad F_{2radN} = \frac{F_{2rad100}}{\sqrt[3]{\frac{n_{2m*}}{100\ \text{rpm}}}} \qquad M_{2kN} = \frac{M_{2k100}}{\sqrt[3]{\frac{n_{2m*}}{100\ \text{rpm}}}}$$

The values for F_{2ax100}, $F_{2rad100}$ and M_{2k100} can be found in the table "Permitted shaft loads" in this chapter.

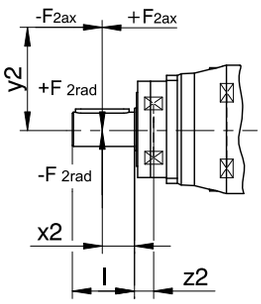

Fig. 5: Force application points

The specified values for $F_{2rad100}$ and $F_{2rad,acc}$ refer to an application of force at the center of the output shaft: $x_2 = l/2$.

Shaft dimensions can be found in the "Dimensional drawings" chapter.

The following applies to other force application points:

$$M_{2k,acc*} = \frac{2 \cdot F_{2ax*} \cdot y_2 + F_{2rad,acc*} \cdot (x_2 + z_2)}{1000} \leq M_{2k,acc}$$

$$F_{2rad,acc*} \leq F_{2rad,acc}$$

$$F_{2ax*} \leq F_{2axN}$$

The values for $F_{2rad,acc}$ and $M_{2k,acc}$ can be found in the table "Permitted shaft loads" in this chapter.

For applications with multiple axial and/or radial forces, you must add the forces as vectors.

In the event of EMERGENCY OFF operation (max. 1000 load changes), you can multiply the permitted forces and torques for F_{2ax100}, $F_{2rad100}$ and M_{2k100} by a factor of two.

Also note the calculation for equivalent values:

$$M_{2k,eq*} = \sqrt[3]{\frac{|n_{2m,1*}| \cdot t_{1*} \cdot |M_{2k,acc,1*}{}^3| + \ldots + |n_{2m,n*}| \cdot t_{n*} \cdot |M_{2k,acc,n*}{}^3|}{|n_{2m,1*}| \cdot t_{1*} + \ldots + |n_{2m,n*}| \cdot t_{n*}}} \leq M_{2kN}$$

$$F_{2rad,eq*} = \sqrt[3]{\frac{|n_{2m,1*}| \cdot t_{1*} \cdot |F_{2rad,acc,1*}{}^3| + \ldots + |n_{2m,n*}| \cdot t_{n*} \cdot |F_{2rad,acc,n*}{}^3|}{|n_{2m,1*}| \cdot t_{1*} + \ldots + |n_{2m,n*}| \cdot t_{n*}}} \leq F_{2radN}$$

The following apply to the bearing service life L_{10h} ($ED_{10} \leq 40\%$):

$L_{10h} > 10000$ h with $1 < M_{2kN}/M_{2k*} < 1.25$

$L_{10h} > 20000$ h with $1.25 < M_{2kN}/M_{2k*} < 1.5$

$L_{10h} > 30000$ h with $1.5 < M_{2kN}/M_{2k*}$

For different duty cycles:

$$L_{10h} > L_{10h(ED_{10}=40\%)} \cdot \frac{40\%}{ED_{10}}$$

10.6.3 Permitted breakdown torques at the gear unit input

For a horizontal mounting position of the motor, verify that the permitted breakdown torque at the gear unit input is not exceeded before installation on a STOBER gear unit. You can find information for how to do that in this chapter.

Calculate the actual breakdown torque as follows:

$M_{1k*} = F_{1k*} \bullet l_{sp} \leq M_{1k}$

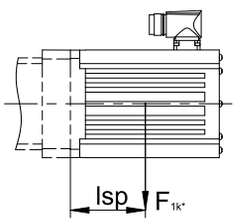

Type	M_{1k} [Nm]
KX301_MF	12
KX401_MF	24
KX501_MF	50
KX701_MF	100

10.6.4 Recommendation for radial shaft seal rings

For a duty cycle > 60% and higher surrounding temperatures, we recommend radial shaft seal rings made of FKM at the output.

Properties:

- Excellent temperature resistance
- High chemical stability
- Very good resistance to aging
- Excellent resistance in oils and greases
- For use in the food, beverage and pharmaceutical industries

Leak-proofness

Our gear units are equipped with high-quality radial shaft seal rings and checked for leaks. However, a leak cannot be fully ruled out over the length of use of a gear unit. If you use a gear unit with goods incompatible with the lubricant, you must take measures to prevent direct contact with the gear unit lubricant in case of a leak.

10.6.5 Reverse operation

To ensure lubrication for circulating gearing parts during cyclic reverse operation from ± 20° to ± 90° at the output, pay careful attention to the position of the output shaft for the horizontal mounting of the gear unit, as shown in the diagrams below. The images show the center position of reverse operation. Cyclic reverse operation ≤ ± 20° on request.

Solid shaft without feather key	Solid shaft with feather key
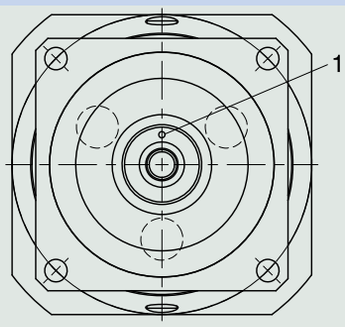	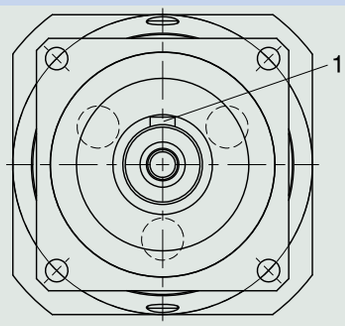
1 Position of the mark: top	1 Position of the feather key: top

Notes

- If you use the solid shaft without a feather key (G), you must note the position of the mark during assembly.
- As an alternative, you can use the solid shaft with a feather key (P). In that case, the feather key functions for position orientation. For a backlash-free connection, also use a clamp.

10.7 Additional documentation

Additional documentation related to the product can be found at
http://www.stoeber.de/en/downloads/

Enter the ID of the documentation in the Search... field.

Documentation	ID
Operating manual for KL/KS/PHK/PHKX/PHQK/PK/PKX right-angle servo gear units and right-angle servo geared motors	443150_en
Operating manual for explosion-proof KL/KS/PHK/PHKX/PHQK/PK/PKX right-angle gear units	443005_en
Information explosion-proof gear units	441677_en

11 PK right-angle planetary gear units

Table of contents

11.1 Overview ... 224

11.2 Selection tables ... 225

11.3 Dimensional drawings ... 231

11.3.1 G shaft design (solid shaft without feather key) ... 232

11.3.2 P shaft design (solid shaft with feather key) ... 233

11.4 Type designation ... 234

11.4.1 Nameplate ... 235

11.5 Product description ... 235

11.5.1 Input options ... 235

11.5.2 Motor adapter with EasyAdapt coupling (ME) ... 236

11.5.3 Square motor adapter with backlash-free plug-in coupling (MQ) ... 236

11.5.4 Installation conditions ... 236

11.5.5 Mounting positions ... 237

11.5.6 Lubricants ... 237

11.5.7 Position of locking screw access ... 238

11.5.8 Other product features ... 238

11.5.9 Direction of rotation ... 238

11.6 Project configuration ... 238

11.6.1 Drive selection ... 239

11.6.2 Permitted shaft loads for the output shaft ... 241

11.6.3 Permitted breakdown torques at the gear unit input ... 244

11.6.4 Recommendation for radial shaft seal rings ... 244

11.6.5 Reverse operation ... 245

11.7 Additional documentation ... 245

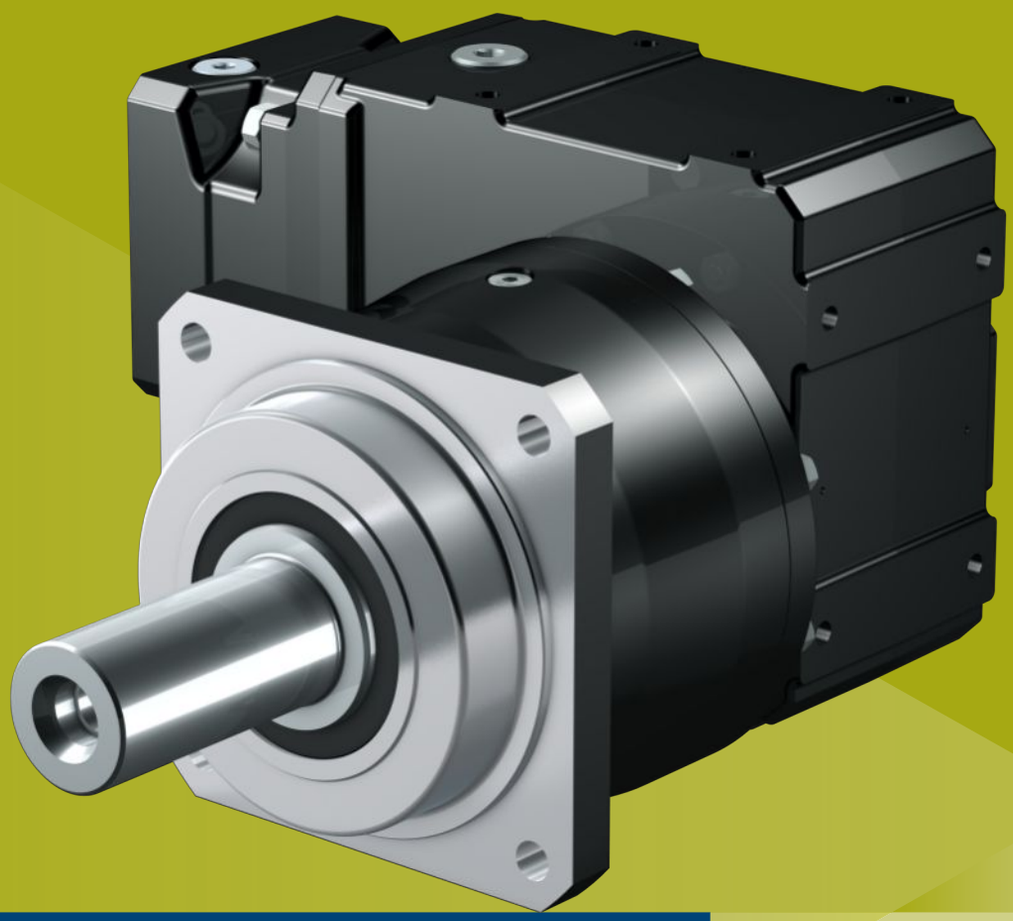

11 PK right-angle planetary gear units

11.1 Overview

Helical-geared precision right-angle planetary gear units

Features

Power density	★★★☆☆
Backlash	★★★★★
Price category	€€€
Shaft load	★★★★☆
Smooth operation	★★★☆☆
Torsional stiffness	★★★☆☆
Mass moment of inertia	★★★★☆
Helical gearing	✓
Maintenance-free	✓
Continuous operation without cooling	✓
Reinforced output bearing	✓ (optional)
Easy and reliable attachment to any synchronous servo motor	✓

Key ★☆☆☆☆ good | ★★★★★ excellent
€ Economy | €€€€€ Premium

Technical data

i	12 – 561
M_{2acc}	200 – 3105 Nm
$\Delta\phi_2$	1.5 – 5 arcmin
η_{get}	94 %

11.2 Selection tables

The technical data specified in the selection tables applies to:

- Installation altitudes up to 1000 m above sea level
- Surrounding temperatures from 0 °C to 40 °C
- Without consideration for thermal limiting performance
- M_{2acc}, M_{2accHT}: Solid shaft design without feather key (we generally recommend this shaft design for cyclic operation)

You can find the mass moment of inertia J_1 for smaller motor shaft diameters and all other technical data at http://configurator.stoeber.de.

An explanation of the formula symbols can be found in the chapter [▸ 18.1].

i	i_{exakt}	Type	n_{1MAXDB} EL1,2 [rpm]	n_{1MAXDB} EL3,4,5,6 [rpm]	n_{1MAXZB} [rpm]	d_{MW} [mm]	J_1 [kgcm²]	m [kg]	C_2 [Nm/arcmin]	$\Delta\varphi_2$ [arcmin]	$\Delta\varphi_{2red}$ [arcmin]	M_{2N} [Nm]	M_{2acc} [Nm]	M_{2accHT} [Nm]	M_{2NOT} [Nm]
P531K ($M_{2acc,max}$ = 385 Nm)															
12.00	12/1	P531_0030K102_0040 ME10	3300	2800	5000	≤19	1.7	17	22	5.0	3.0	120	200	200	360
12.00	12/1	P531_0030K102_0040 ME20	3300	2800	5000	≤24	3.6	18	22	5.0	3.0	120	200	200	360
16.00	16/1	P531_0040K102_0040 ME10	3300	2800	5000	≤19	1.6	17	26	4.5	2.5	210	300	320	480
16.00	16/1	P531_0040K102_0040 ME20	3300	2800	5000	≤24	3.5	18	26	4.5	2.5	210	300	320	480
20.00	20/1	P531_0050K102_0040 ME10	3300	2800	5000	≤19	1.5	17	29	4.0	2.0	220	350	385	600
20.00	20/1	P531_0050K102_0040 ME20	3300	2800	5000	≤24	3.4	18	29	4.0	2.0	220	350	385	600
27.84	7600/273	P531_0050K102_0056 ME10	3300	2800	5000	≤19	1.3	17	29	4.0	2.0	220	350	385	700
27.84	7600/273	P531_0050K102_0056 ME20	3300	2800	5000	≤24	3.2	18	29	4.0	2.0	220	350	385	700
30.00	30/1	P531_0050K102_0060 ME10	3300	2800	5000	≤19	1.1	17	29	4.0	2.0	220	350	385	700
30.00	30/1	P531_0050K102_0060 ME20	3300	2800	5000	≤24	3.0	18	29	4.0	2.0	220	350	385	700
33.22	299/9	P531_0050K102_0066 ME10	3600	3300	5500	≤19	1.0	17	29	4.0	2.0	220	350	385	700
33.22	299/9	P531_0050K102_0066 ME20	3600	3300	5500	≤24	2.9	18	29	4.0	2.0	220	350	385	700
41.55	1911/46	P531_0050K102_0083 ME10	3600	3300	5500	≤19	0.93	17	29	4.0	2.0	220	350	385	700
41.55	1911/46	P531_0050K102_0083 ME20	3600	3300	5500	≤24	2.8	18	29	4.0	2.0	220	350	385	700
46.25	8740/189	P531_0050K102_0092 ME10	3600	3300	5500	≤19	0.97	17	29	4.0	2.0	220	350	385	700
46.25	8740/189	P531_0050K102_0092 ME20	3600	3300	5500	≤24	2.9	18	29	4.0	2.0	220	350	385	700
57.83	1330/23	P531_0050K102_0115 ME10	3600	3300	5500	≤19	0.87	17	29	4.0	2.0	220	350	385	700
57.83	1330/23	P531_0050K102_0115 ME20	3600	3300	5500	≤24	2.8	18	29	4.0	2.0	220	350	385	700
70.57	494/7	P531_0050K102_0140 ME10	4000	3800	6000	≤19	0.82	17	29	4.0	2.0	220	350	385	700
70.57	494/7	P531_0050K102_0140 ME20	3700	3700	6000	≤24	2.7	18	29	4.0	2.0	220	350	385	700
87.82	10450/119	P531_0050K102_0175 ME10	4000	3800	6000	≤19	0.77	17	29	4.0	2.0	220	350	385	700
87.82	10450/119	P531_0050K102_0175 ME20	3700	3700	6000	≤24	2.7	18	29	4.0	2.0	220	350	385	700
116.3	5700/49	P531_0050K102_0230 ME10	4000	4000	7000	≤19	0.72	17	29	4.0	2.0	220	350	385	700
116.3	5700/49	P531_0050K102_0230 ME20	3700	3700	6000	≤24	2.6	18	29	4.0	2.0	220	350	385	700
140.2	2945/21	P531_0050K102_0280 ME10	4000	4000	7000	≤19	0.70	17	29	4.0	2.0	220	350	385	700
140.2	2945/21	P531_0050K102_0280 ME20	3700	3700	6000	≤24	2.6	18	29	4.0	2.0	220	350	385	700
175.5	3686/21	P531_0050K102_0350 ME10	4000	4000	7000	≤19	0.68	17	29	4.0	2.0	220	350	385	700
175.5	3686/21	P531_0050K102_0350 ME20	3700	3700	6000	≤24	2.6	18	29	4.0	2.0	220	350	385	700
234.6	11495/49	P531_0050K102_0470 ME10	4000	4000	7000	≤19	0.63	17	29	4.0	2.0	220	350	385	700
280.5	5890/21	P531_0050K102_0560 ME10	4000	4000	7000	≤19	0.62	17	29	4.0	2.0	220	350	385	700
P731K ($M_{2acc,max}$ = 840 Nm)															
12.00	12/1	P731_0030K202_0040 ME20	3000	2600	4500	≤32	7.0	32	39	4.5	2.5	300	500	500	900
12.00	12/1	P731_0030K202_0040 ME30	3000	2600	4500	≤38	12	34	39	4.5	2.5	300	500	500	900
16.00	16/1	P731_0040K202_0040 ME20	3000	2600	4500	≤32	6.7	32	49	4.5	2.5	440	677	677	1200
16.00	16/1	P731_0040K202_0040 ME30	3000	2600	4500	≤38	12	34	49	4.5	2.5	440	677	677	1200
20.00	20/1	P731_0050K202_0040 ME20	3000	2600	4500	≤32	6.6	32	53	4.0	2.0	440	805	840	1500
20.00	20/1	P731_0050K202_0040 ME30	3000	2600	4500	≤38	12	34	53	4.0	2.0	440	805	840	1500
25.89	10535/407	P731_0050K202_0052 ME20	3000	2600	4500	≤32	5.7	32	53	4.0	2.0	440	805	840	1610
25.89	10535/407	P731_0050K202_0052 ME30	3000	2600	4500	≤38	11	34	53	4.0	2.0	440	805	840	1610
28.00	28/1	P731_0070K102_0040 ME10	3300	2800	5000	≤19	1.6	23	51	4.0	2.0	440	633	633	841
28.00	28/1	P731_0070K102_0040 ME20	3300	2800	5000	≤24	3.5	24	52	4.0	2.0	440	633	633	841
30.00	30/1	P731_0050K202_0060 ME10	3000	2600	4500	≤19	2.4	31	53	4.0	2.0	440	677	677	900
30.00	30/1	P731_0050K202_0060 ME20	3000	2600	4500	≤32	5.8	32	53	4.0	2.0	440	805	840	1610
30.00	30/1	P731_0050K202_0060 ME30	3000	2600	4500	≤38	11	34	53	4.0	2.0	440	805	840	1610
33.42	11395/341	P731_0050K202_0067 ME10	3500	3100	5000	≤19	1.8	31	53	4.0	2.0	440	755	755	1003
33.42	11395/341	P731_0050K202_0067 ME20	3500	3100	5000	≤32	5.2	32	53	4.0	2.0	440	805	840	1610
33.42	11395/341	P731_0050K202_0067 ME30	3500	3100	5000	≤38	10	34	53	4.0	2.0	440	805	840	1610
38.98	1520/39	P731_0070K102_0056 ME10	3300	2800	5000	≤19	1.3	23	52	4.0	2.0	440	741	741	1170
38.98	1520/39	P731_0070K102_0056 ME20	3300	2800	5000	≤24	3.2	24	52	4.0	2.0	440	741	741	1170
40.00	40/1	P731_0100K102_0040 ME10	3300	2800	5000	≤19	1.5	23	50	3.5	1.5	350	575	575	1150

i	i_{exakt}	Type	n_{1MAXDB} EL1,2 [rpm]	n_{1MAXDB} EL3,4,5,6 [rpm]	n_{1MAXZB} [rpm]	d_{MW} [mm]	J_1 [kgcm²]	m [kg]	C_2 [Nm/arcmin]	$\Delta\varphi_2$ [arcmin]	$\Delta\varphi_{2red}$ [arcmin]	M_{2N} [Nm]	M_{2acc} [Nm]	M_{2accHT} [Nm]	M_{2NOT} [Nm]
P731K ($M_{2acc,max}$ = 840 Nm)															
40.00	40/1	P731_0100K102_0040 ME20	3300	2800	5000	≤24	3.4	24	50	3.5	1.5	350	575	575	1150
41.99	12470/297	P731_0050K202_0084 ME10	3500	3100	5000	≤19	1.4	31	53	4.0	2.0	440	805	840	1260
41.99	12470/297	P731_0050K202_0084 ME20	3500	3100	5000	≤32	4.8	32	53	4.0	2.0	440	805	840	1610
41.99	12470/297	P731_0050K202_0084 ME30	3500	3100	5000	≤38	10	34	53	4.0	2.0	440	805	840	1610
42.00	42/1	P731_0070K102_0060 ME10	3300	2800	5000	≤19	1.1	23	52	4.0	2.0	440	760	760	1260
42.00	42/1	P731_0070K102_0060 ME20	3300	2800	5000	≤24	3.0	24	52	4.0	2.0	440	760	760	1260
45.95	11395/248	P731_0050K202_0092 ME10	3500	3100	5000	≤19	1.6	31	53	4.0	2.0	440	805	840	1379
45.95	11395/248	P731_0050K202_0092 ME20	3500	3100	5000	≤32	5.0	32	53	4.0	2.0	440	805	840	1610
45.95	11395/248	P731_0050K202_0092 ME30	3500	3100	5000	≤38	10	34	53	4.0	2.0	440	805	840	1610
46.51	2093/45	P731_0070K102_0066 ME10	3600	3300	5500	≤19	1.1	23	52	4.0	2.0	440	786	786	1396
46.51	2093/45	P731_0070K102_0066 ME20	3600	3300	5500	≤24	3.0	24	52	4.0	2.0	440	786	786	1396
55.68	15200/273	P731_0100K102_0056 ME10	3300	2800	5000	≤19	1.3	23	50	3.5	1.5	350	575	575	1150
55.68	15200/273	P731_0100K102_0056 ME20	3300	2800	5000	≤24	3.2	24	50	3.5	1.5	350	575	575	1150
57.73	6235/108	P731_0050K202_0115 ME10	3500	3100	5000	≤19	1.3	31	53	4.0	2.0	440	805	840	1610
57.73	6235/108	P731_0050K202_0115 ME20	3500	3100	5000	≤32	4.7	32	53	4.0	2.0	440	805	840	1610
57.73	6235/108	P731_0050K202_0115 ME30	3500	3100	5000	≤38	10	34	53	4.0	2.0	440	805	840	1610
58.16	13377/230	P731_0070K102_0083 ME10	3600	3300	5500	≤19	0.94	23	52	4.0	2.0	440	805	840	1561
58.16	13377/230	P731_0070K102_0083 ME20	3600	3300	5500	≤24	2.8	24	52	4.0	2.0	440	805	840	1561
60.00	60/1	P731_0100K102_0060 ME10	3300	2800	5000	≤19	1.1	23	50	3.5	1.5	350	575	575	1150
60.00	60/1	P731_0100K102_0060 ME20	3300	2800	5000	≤24	3.0	24	50	3.5	1.5	350	575	575	1150
64.74	1748/27	P731_0070K102_0092 ME10	3600	3300	5500	≤19	0.97	23	52	4.0	2.0	440	805	840	1561
64.74	1748/27	P731_0070K102_0092 ME20	3600	3300	5500	≤24	2.9	24	52	4.0	2.0	440	805	840	1561
66.44	598/9	P731_0100K102_0066 ME10	3600	3300	5500	≤19	1.0	23	50	3.5	1.5	350	575	575	1150
66.44	598/9	P731_0100K102_0066 ME20	3600	3300	5500	≤24	2.9	24	50	3.5	1.5	350	575	575	1150
69.26	14405/208	P731_0050K202_0140 ME10	3900	3500	5500	≤19	1.1	31	53	4.0	2.0	440	805	840	1610
69.26	14405/208	P731_0050K202_0140 ME20	3700	3500	5500	≤32	4.5	32	53	4.0	2.0	440	805	840	1610
69.26	14405/208	P731_0050K202_0140 ME30	3500	3500	5000	≤38	9.9	34	53	4.0	2.0	440	805	840	1610
70.98	3549/50	P731_0070K102_0100 ME10	4000	3800	6000	≤19	0.86	23	52	4.0	2.0	440	805	840	1561
70.98	3549/50	P731_0070K102_0100 ME20	3700	3700	6000	≤24	2.8	24	52	4.0	2.0	440	805	840	1561
80.96	1862/23	P731_0070K102_0115 ME10	3600	3300	5500	≤19	0.88	23	52	4.0	2.0	440	805	840	1561
80.96	1862/23	P731_0070K102_0115 ME20	3600	3300	5500	≤24	2.8	24	52	4.0	2.0	440	805	840	1561
83.09	1911/23	P731_0100K102_0083 ME10	3600	3300	5500	≤19	0.93	23	50	3.5	1.5	350	575	575	1150
83.09	1911/23	P731_0100K102_0083 ME20	3600	3300	5500	≤24	2.8	24	50	3.5	1.5	350	575	575	1150
87.35	2795/32	P731_0050K202_0175 ME10	3900	3500	5500	≤19	1.0	31	53	4.0	2.0	440	805	840	1610
87.35	2795/32	P731_0050K202_0175 ME20	3700	3500	5500	≤32	4.4	32	53	4.0	2.0	440	805	840	1610
87.35	2795/32	P731_0050K202_0175 ME30	3500	3500	5000	≤38	9.7	34	53	4.0	2.0	440	805	840	1610
88.33	3003/34	P731_0070K102_0125 ME10	4000	3800	6000	≤19	0.79	23	52	4.0	2.0	440	805	840	1561
88.33	3003/34	P731_0070K102_0125 ME20	3700	3700	6000	≤24	2.7	24	52	4.0	2.0	440	805	840	1561
92.49	17480/189	P731_0100K102_0092 ME10	3600	3300	5500	≤19	0.96	23	50	3.5	1.5	350	575	575	1150
92.49	17480/189	P731_0100K102_0092 ME20	3600	3300	5500	≤24	2.9	24	50	3.5	1.5	350	575	575	1150
98.80	494/5	P731_0070K102_0140 ME10	4000	3800	6000	≤19	0.82	23	52	4.0	2.0	440	805	840	1561
98.80	494/5	P731_0070K102_0140 ME20	3700	3700	6000	≤24	2.7	24	52	4.0	2.0	440	805	840	1561
115.7	2660/23	P731_0100K102_0115 ME10	3600	3300	5500	≤19	0.87	23	50	3.5	1.5	350	575	575	1150
115.7	2660/23	P731_0100K102_0115 ME20	3600	3300	5500	≤24	2.8	24	50	3.5	1.5	350	575	575	1150
115.9	14835/128	P731_0050K202_0230 ME10	4000	3900	6500	≤19	0.87	31	53	4.0	2.0	440	805	840	1610
115.9	14835/128	P731_0050K202_0230 ME20	3700	3700	6000	≤32	4.3	32	53	4.0	2.0	440	805	840	1610
115.9	14835/128	P731_0050K202_0230 ME30	3500	3500	5000	≤38	9.6	34	53	4.0	2.0	440	805	840	1610
117.0	117/1	P731_0070K102_0165 ME10	4000	4000	7000	≤19	0.73	23	52	4.0	2.0	440	805	840	1561
117.0	117/1	P731_0070K102_0165 ME20	3700	3700	6000	≤24	2.6	24	52	4.0	2.0	440	805	840	1561
122.9	2090/17	P731_0070K102_0175 ME10	4000	3800	6000	≤19	0.77	23	52	4.0	2.0	440	805	840	1561
122.9	2090/17	P731_0070K102_0175 ME20	3700	3700	6000	≤24	2.7	24	52	4.0	2.0	440	805	840	1561
139.8	559/4	P731_0050K202_0280 ME10	4000	3900	6500	≤19	0.81	31	53	4.0	2.0	440	805	840	1610
139.8	559/4	P731_0050K202_0280 ME20	3700	3700	6000	≤24	2.7	32	53	4.0	2.0	440	805	840	1610
141.1	2821/20	P731_0070K102_0200 ME10	4000	4000	7000	≤19	0.71	23	52	4.0	2.0	440	805	840	1561
141.1	2821/20	P731_0070K102_0200 ME20	3700	3700	6000	≤24	2.6	24	52	4.0	2.0	440	805	840	1561
162.9	1140/7	P731_0070K102_0230 ME10	4000	4000	7000	≤19	0.72	23	52	4.0	2.0	440	805	840	1561
162.9	1140/7	P731_0070K102_0230 ME20	3700	3700	6000	≤24	2.6	24	52	4.0	2.0	440	805	840	1561
172.8	9675/56	P731_0050K202_0350 ME10	4000	3900	6500	≤19	0.76	31	53	4.0	2.0	440	805	840	1610
172.8	9675/56	P731_0050K202_0350 ME20	3700	3700	6000	≤24	2.7	32	53	4.0	2.0	440	805	840	1610
176.5	8827/50	P731_0070K102_0250 ME10	4000	4000	7000	≤19	0.68	23	52	4.0	2.0	440	783	783	1386
176.5	8827/50	P731_0070K102_0250 ME20	3700	3700	6000	≤24	2.6	24	52	4.0	2.0	440	783	783	1386
196.3	589/3	P731_0070K102_0280 ME10	4000	4000	7000	≤19	0.70	23	52	4.0	2.0	440	805	840	1561
196.3	589/3	P731_0070K102_0280 ME20	3700	3700	6000	≤24	2.6	24	52	4.0	2.0	440	805	840	1561
231.1	1849/8	P731_0050K202_0460 ME10	4000	3900	6500	≤19	0.71	31	53	4.0	2.0	440	805	840	1610

i	i_{exakt}	Type	n_{1MAXDB} EL1,2 [rpm]	n_{1MAXDB} EL3,4,5,6 [rpm]	n_{1MAXZB} [rpm]	d_{MW} [mm]	J_1 [kgcm²]	m [kg]	C_2 [Nm/arcmin]	$\Delta\varphi_2$ [arcmin]	$\Delta\varphi_{2red}$ [arcmin]	M_{2N} [Nm]	M_{2acc} [Nm]	M_{2accHT} [Nm]	M_{2NOT} [Nm]
P731K ($M_{2acc,max}$ = 840 Nm)															
231.1	1849/8	P731_0050K202_0460 ME20	3700	3700	6000	≤24	2.6	32	53	4.0	2.0	440	805	840	1610
232.7	11400/49	P731_0100K102_0230 ME10	4000	4000	7000	≤19	0.72	23	50	3.5	1.5	350	575	575	1150
232.7	11400/49	P731_0100K102_0230 ME20	3700	3700	6000	≤24	2.6	24	50	3.5	1.5	350	575	575	1150
235.9	4719/20	P731_0070K102_0340 ME10	4000	4000	7000	≤19	0.63	23	52	4.0	2.0	440	595	595	1053
245.7	3686/15	P731_0070K102_0350 ME10	4000	4000	7000	≤19	0.68	23	52	4.0	2.0	440	805	840	1561
245.7	3686/15	P731_0070K102_0350 ME20	3700	3700	6000	≤24	2.6	24	52	4.0	2.0	440	805	840	1561
277.7	6665/24	P731_0050K202_0560 ME10	4000	3900	6500	≤19	0.66	31	53	4.0	2.0	440	805	840	1401
280.5	5890/21	P731_0100K102_0280 ME10	4000	4000	7000	≤19	0.70	23	50	3.5	1.5	350	575	575	1150
280.5	5890/21	P731_0100K102_0280 ME20	3700	3700	6000	≤24	2.6	24	50	3.5	1.5	350	575	575	1150
282.1	2821/10	P731_0070K102_0400 ME10	4000	4000	7000	≤19	0.62	23	52	4.0	2.0	417	501	501	887
328.4	2299/7	P731_0070K102_0470 ME10	4000	4000	7000	≤19	0.63	23	52	4.0	2.0	440	805	828	1466
351.1	7372/21	P731_0100K102_0350 ME10	4000	4000	7000	≤19	0.68	23	50	3.5	1.5	350	575	575	1150
351.1	7372/21	P731_0100K102_0350 ME20	3700	3700	6000	≤24	2.6	24	50	3.5	1.5	350	575	575	1150
352.2	35217/100	P731_0070K102_0500 ME10	4000	4000	7000	≤19	0.62	23	52	4.0	2.0	339	407	407	721
392.7	1178/3	P731_0070K102_0560 ME10	4000	4000	7000	≤19	0.62	23	52	4.0	2.0	440	697	697	1235
469.2	22990/49	P731_0100K102_0470 ME10	4000	4000	7000	≤19	0.63	23	50	3.5	1.5	350	575	575	1150
490.2	2451/5	P731_0070K102_0700 ME10	4000	4000	7000	≤19	0.62	23	52	4.0	2.0	440	566	566	1003
561.0	11780/21	P731_0100K102_0560 ME10	4000	4000	7000	≤19	0.62	23	50	3.5	1.5	350	575	575	1150
P831K ($M_{2acc,max}$ = 1867 Nm)															
12.00	12/1	P831_0030K302_0040 ME20	2700	2300	4000	≤32	12	52	81	4.5	2.5	593	677	677	900
12.00	12/1	P831_0030K302_0040 ME30	2700	2300	4000	≤38	17	54	83	4.5	2.5	593	889	889	2165
16.00	16/1	P831_0040K302_0040 ME20	2700	2300	4000	≤32	10	52	108	4.0	2.0	790	903	903	1200
16.00	16/1	P831_0040K302_0040 ME30	2700	2300	4000	≤38	16	54	109	4.0	2.0	790	1186	1186	2887
20.00	20/1	P831_0050K302_0040 ME20	2700	2300	4000	≤32	9.7	52	126	4.0	2.0	988	1129	1129	1500
20.00	20/1	P831_0050K302_0040 ME30	2700	2300	4000	≤38	15	54	127	4.0	2.0	988	1482	1482	3230
26.88	215/8	P831_0050K302_0054 ME20	2700	2300	4000	≤32	7.6	52	127	4.0	2.0	1090	1518	1518	2016
26.88	215/8	P831_0050K302_0054 ME30	2700	2300	4000	≤38	13	54	127	4.0	2.0	1090	1518	1518	2016
28.00	28/1	P831_0070K202_0040 ME20	3000	2600	4500	≤32	6.8	47	128	3.5	1.5	790	1185	1185	2100
28.00	28/1	P831_0070K202_0040 ME30	3000	2600	4500	≤38	12	49	128	3.5	1.5	790	1185	1185	2100
30.00	30/1	P831_0050K302_0060 ME20	2700	2300	4000	≤32	7.8	52	127	4.0	2.0	1100	1694	1694	2250
30.00	30/1	P831_0050K302_0060 ME30	2700	2300	4000	≤38	13	54	128	4.0	2.0	1100	1697	1697	3230
30.55	336/11	P831_0070K202_0044 ME10	3000	2600	4500	≤19	3.0	46	125	3.5	1.5	690	690	690	916
30.55	336/11	P831_0070K202_0044 ME20	3000	2600	4500	≤32	6.4	47	128	3.5	1.5	813	1220	1220	2291
30.55	336/11	P831_0070K202_0044 ME30	3000	2600	4500	≤38	12	49	128	3.5	1.5	813	1220	1220	2291
36.24	14749/407	P831_0070K202_0052 ME20	3000	2600	4500	≤32	5.9	47	128	3.5	1.5	861	1291	1291	2718
36.24	14749/407	P831_0070K202_0052 ME30	3000	2600	4500	≤38	11	49	128	3.5	1.5	861	1291	1291	2718
36.96	2365/64	P831_0050K302_0074 ME20	2700	2300	4000	≤32	6.9	52	127	4.0	2.0	1100	1819	1819	2772
36.96	2365/64	P831_0050K302_0074 ME30	2700	2300	4000	≤38	12	54	128	4.0	2.0	1100	1819	1819	2772
40.00	40/1	P831_0100K202_0040 ME20	3000	2600	4500	≤32	6.6	47	131	3.5	1.5	850	1380	1380	2760
40.00	40/1	P831_0100K202_0040 ME30	3000	2600	4500	≤38	12	49	131	3.5	1.5	850	1380	1380	2760
42.00	42/1	P831_0070K202_0060 ME10	3000	2600	4500	≤19	2.5	46	127	3.5	1.5	904	948	948	1260
42.00	42/1	P831_0070K202_0060 ME20	3000	2600	4500	≤32	5.9	47	128	3.5	1.5	904	1356	1356	2887
42.00	42/1	P831_0070K202_0060 ME30	3000	2600	4500	≤38	11	49	128	3.5	1.5	904	1356	1356	2887
46.34	5375/116	P831_0050K302_0093 ME20	3200	2800	4500	≤32	6.1	52	128	4.0	2.0	1100	1840	1867	3230
46.34	5375/116	P831_0050K302_0093 ME30	3200	2800	4500	≤38	11	54	128	4.0	2.0	1100	1840	1867	3230
46.78	15953/341	P831_0070K202_0067 ME10	3500	3100	5000	≤19	1.8	46	127	3.5	1.5	919	1057	1057	1404
46.78	15953/341	P831_0070K202_0067 ME20	3500	3100	5000	≤32	5.2	47	128	3.5	1.5	937	1406	1406	2887
46.78	15953/341	P831_0070K202_0067 ME30	3500	3100	5000	≤38	11	49	128	3.5	1.5	937	1406	1406	2887
49.83	14749/296	P831_0070K202_0071 ME20	3000	2600	4500	≤32	5.5	47	128	3.5	1.5	957	1436	1436	2887
49.83	14749/296	P831_0070K202_0071 ME30	3000	2600	4500	≤38	11	49	128	3.5	1.5	957	1436	1436	2887
51.77	21070/407	P831_0100K202_0052 ME20	3000	2600	4500	≤32	5.8	47	131	3.5	1.5	850	1380	1380	2760
51.77	21070/407	P831_0100K202_0052 ME30	3000	2600	4500	≤38	11	49	131	3.5	1.5	850	1380	1380	2760
58.05	1161/20	P831_0050K302_0115 ME10	3200	2800	4500	≤19	2.1	51	127	4.0	2.0	1100	1311	1311	1742
58.05	1161/20	P831_0050K302_0115 ME20	3200	2800	4500	≤32	5.5	52	128	4.0	2.0	1100	1840	1867	3230
58.05	1161/20	P831_0050K302_0115 ME30	3200	2800	4500	≤38	11	54	128	4.0	2.0	1100	1840	1867	3230
58.78	17458/297	P831_0070K202_0084 ME10	3500	3100	5000	≤19	1.5	46	128	3.5	1.5	1000	1328	1328	1764
58.78	17458/297	P831_0070K202_0084 ME20	3500	3100	5000	≤32	4.9	47	128	3.5	1.5	1000	1494	1494	2887
58.78	17458/297	P831_0070K202_0084 ME30	3500	3100	5000	≤38	10	49	128	3.5	1.5	1000	1494	1494	2887
60.00	60/1	P831_0100K202_0060 ME10	3000	2600	4500	≤19	2.4	46	131	3.5	1.5	850	1355	1355	1800
60.00	60/1	P831_0100K202_0060 ME20	3000	2600	4500	≤32	5.8	47	131	3.5	1.5	850	1380	1380	2760
60.00	60/1	P831_0100K202_0060 ME30	3000	2600	4500	≤38	11	49	131	3.5	1.5	850	1380	1380	2760
64.33	15953/248	P831_0070K202_0092 ME10	3500	3100	5000	≤19	1.6	46	128	3.5	1.5	1000	1453	1453	1931
64.33	15953/248	P831_0070K202_0092 ME20	3500	3100	5000	≤32	5.0	47	128	3.5	1.5	1000	1494	1494	2887
64.33	15953/248	P831_0070K202_0092 ME30	3500	3100	5000	≤38	10	49	128	3.5	1.5	1000	1494	1494	2887

i	i_{exakt}	Type	n_{1MAXDB} EL1,2 [rpm]	n_{1MAXDB} EL3,4,5,6 [rpm]	n_{1MAXZB} [rpm]	d_{MW} [mm]	J_1 [kgcm²]	m [kg]	C_2 [Nm/arcmin]	$\Delta\varphi_2$ [arcmin]	$\Delta\varphi_{2red}$ [arcmin]	M_{2N} [Nm]	M_{2acc} [Nm]	M_{2accHT} [Nm]	M_{2NOT} [Nm]
P831K ($M_{2acc,max}$ = 1867 Nm)															
66.83	22790/341	P831_0100K202_0067 ME10	3500	3100	5000	≤19	1.8	46	131	3.5	1.5	850	1380	1380	2006
66.83	22790/341	P831_0100K202_0067 ME20	3500	3100	5000	≤32	5.2	47	131	3.5	1.5	850	1380	1380	2760
66.83	22790/341	P831_0100K202_0067 ME30	3500	3100	5000	≤38	11	49	131	3.5	1.5	850	1380	1380	2760
69.68	7525/108	P831_0050K302_0140 ME10	3500	3100	5000	≤19	1.7	51	127	4.0	2.0	1100	1574	1574	2091
69.68	7525/108	P831_0050K302_0140 ME20	3500	3100	5000	≤32	5.1	52	128	4.0	2.0	1100	1840	1867	3230
69.68	7525/108	P831_0050K302_0140 ME30	3500	3100	5000	≤38	10	54	128	4.0	2.0	1100	1840	1867	3230
70.51	20167/286	P831_0070K202_0100 ME10	3900	3500	5500	≤19	1.3	46	128	3.5	1.5	1000	1494	1494	2116
70.51	20167/286	P831_0070K202_0100 ME20	3700	3500	5500	≤32	4.7	47	128	3.5	1.5	1000	1494	1494	2887
70.51	20167/286	P831_0070K202_0100 ME30	3500	3500	5000	≤38	10	49	128	3.5	1.5	1000	1494	1494	2887
80.82	8729/108	P831_0070K202_0115 ME10	3500	3100	5000	≤19	1.3	46	128	3.5	1.5	1000	1494	1494	2425
80.82	8729/108	P831_0070K202_0115 ME20	3500	3100	5000	≤32	4.7	47	128	3.5	1.5	1000	1494	1494	2887
80.82	8729/108	P831_0070K202_0115 ME30	3500	3100	5000	≤38	10	49	128	3.5	1.5	1000	1494	1494	2887
83.97	24940/297	P831_0100K202_0084 ME10	3500	3100	5000	≤19	1.4	46	131	3.5	1.5	850	1380	1380	2520
83.97	24940/297	P831_0100K202_0084 ME20	3500	3100	5000	≤32	4.8	47	131	3.5	1.5	850	1380	1380	2760
83.97	24940/297	P831_0100K202_0084 ME30	3500	3100	5000	≤38	10	49	131	3.5	1.5	850	1380	1380	2760
86.47	7955/92	P831_0050K302_0175 ME10	3500	3100	5000	≤19	1.4	51	128	4.0	2.0	1100	1840	1867	2594
86.47	7955/92	P831_0050K302_0175 ME20	3500	3100	5000	≤32	4.8	52	128	4.0	2.0	1100	1840	1867	3230
86.47	7955/92	P831_0050K302_0175 ME30	3500	3100	5000	≤38	10	54	128	4.0	2.0	1100	1840	1867	3230
88.94	3913/44	P831_0070K202_0125 ME10	3900	3500	5500	≤19	1.1	46	128	3.5	1.5	1000	1494	1494	2669
88.94	3913/44	P831_0070K202_0125 ME20	3700	3500	5500	≤32	4.5	47	128	3.5	1.5	1000	1494	1494	2887
88.94	3913/44	P831_0070K202_0125 ME30	3500	3500	5000	≤38	9.8	49	128	3.5	1.5	1000	1494	1494	2887
91.90	11395/124	P831_0100K202_0092 ME10	3500	3100	5000	≤19	1.6	46	131	3.5	1.5	850	1380	1380	2758
91.90	11395/124	P831_0100K202_0092 ME20	3500	3100	5000	≤32	5.0	47	131	3.5	1.5	850	1380	1380	2760
91.90	11395/124	P831_0100K202_0092 ME30	3500	3100	5000	≤38	10	49	131	3.5	1.5	850	1380	1380	2760
96.96	20167/208	P831_0070K202_0140 ME10	3900	3500	5500	≤19	1.2	46	128	3.5	1.5	1000	1494	1494	2887
96.96	20167/208	P831_0070K202_0140 ME20	3700	3500	5500	≤32	4.6	47	128	3.5	1.5	1000	1494	1494	2887
96.96	20167/208	P831_0070K202_0140 ME30	3500	3500	5000	≤38	9.9	49	128	3.5	1.5	1000	1494	1494	2887
115.5	6235/54	P831_0100K202_0115 ME10	3500	3100	5000	≤19	1.3	46	131	3.5	1.5	850	1380	1380	2760
115.5	6235/54	P831_0100K202_0115 ME20	3500	3100	5000	≤32	4.7	47	131	3.5	1.5	850	1380	1380	2760
115.5	6235/54	P831_0100K202_0115 ME30	3500	3100	5000	≤38	10	49	131	3.5	1.5	850	1380	1380	2760
116.5	2795/24	P831_0050K302_0230 ME10	3800	3500	6000	≤19	1.1	51	128	4.0	2.0	1100	1840	1867	3230
116.5	2795/24	P831_0050K302_0230 ME20	3700	3500	6000	≤32	4.5	52	128	4.0	2.0	1100	1840	1867	3230
116.5	2795/24	P831_0050K302_0230 ME30	3500	3500	5000	≤38	9.9	54	128	4.0	2.0	1100	1840	1867	3230
118.0	20769/176	P831_0070K202_0170 ME10	4000	3900	6500	≤19	0.91	46	128	3.5	1.5	1000	1494	1494	2887
118.0	20769/176	P831_0070K202_0170 ME20	3700	3700	6000	≤32	4.3	47	128	3.5	1.5	1000	1494	1494	2887
118.0	20769/176	P831_0070K202_0170 ME30	3500	3500	5000	≤38	9.6	49	128	3.5	1.5	1000	1494	1494	2887
122.3	3913/32	P831_0070K202_0175 ME10	3900	3500	5500	≤19	1.0	46	128	3.5	1.5	1000	1494	1494	2887
122.3	3913/32	P831_0070K202_0175 ME20	3700	3500	5500	≤32	4.4	47	128	3.5	1.5	1000	1494	1494	2887
122.3	3913/32	P831_0070K202_0175 ME30	3500	3500	5000	≤38	9.7	49	128	3.5	1.5	1000	1494	1494	2887
138.5	14405/104	P831_0100K202_0140 ME10	3900	3500	5500	≤19	1.1	46	131	3.5	1.5	850	1380	1380	2760
138.5	14405/104	P831_0100K202_0140 ME20	3700	3500	5500	≤32	4.6	47	131	3.5	1.5	850	1380	1380	2760
138.5	14405/104	P831_0100K202_0140 ME30	3500	3500	5000	≤38	9.9	49	131	3.5	1.5	850	1380	1380	2760
139.4	17845/128	P831_0050K302_0280 ME10	3800	3500	6000	≤19	1.0	51	128	4.0	2.0	1100	1840	1867	3230
139.4	17845/128	P831_0050K302_0280 ME20	3700	3500	6000	≤32	4.4	52	128	4.0	2.0	1100	1840	1867	3230
139.4	17845/128	P831_0050K302_0280 ME30	3500	3500	5000	≤38	9.7	54	128	4.0	2.0	1100	1840	1867	3230
142.3	7826/55	P831_0070K202_0200 ME10	4000	3900	6500	≤19	0.84	46	128	3.5	1.5	1000	1494	1494	2887
142.3	7826/55	P831_0070K202_0200 ME20	3700	3700	6000	≤24	2.7	47	128	3.5	1.5	1000	1494	1494	2887
162.3	20769/128	P831_0070K202_0230 ME10	4000	3900	6500	≤19	0.88	46	128	3.5	1.5	1000	1494	1494	2887
162.3	20769/128	P831_0070K202_0230 ME20	3700	3700	6000	≤32	4.3	47	128	3.5	1.5	1000	1494	1494	2887
162.3	20769/128	P831_0070K202_0230 ME30	3500	3500	5000	≤38	9.6	49	128	3.5	1.5	1000	1494	1494	2887
173.7	4515/26	P831_0050K302_0350 ME10	3800	3500	6000	≤19	0.90	51	128	4.0	2.0	1100	1840	1867	3230
173.7	4515/26	P831_0050K302_0350 ME20	3700	3500	6000	≤24	2.8	52	128	4.0	2.0	1100	1840	1867	3230
174.7	2795/16	P831_0100K202_0175 ME10	3900	3500	5500	≤19	1.0	46	131	3.5	1.5	850	1380	1380	2760
174.7	2795/16	P831_0100K202_0175 ME20	3700	3500	5500	≤32	4.4	47	131	3.5	1.5	850	1380	1380	2760
174.7	2795/16	P831_0100K202_0175 ME30	3500	3500	5000	≤38	9.7	49	131	3.5	1.5	850	1380	1380	2760
175.9	1935/11	P831_0070K202_0250 ME10	4000	3900	6500	≤19	0.77	46	128	3.5	1.5	1000	1494	1494	2887
175.9	1935/11	P831_0070K202_0250 ME20	3700	3700	6000	≤24	2.7	47	128	3.5	1.5	1000	1494	1494	2887
195.7	3913/20	P831_0070K202_0280 ME10	4000	3900	6500	≤19	0.81	46	128	3.5	1.5	1000	1494	1494	2887
195.7	3913/20	P831_0070K202_0280 ME20	3700	3700	6000	≤24	2.7	47	128	3.5	1.5	1000	1494	1494	2887
231.1	1849/8	P831_0050K302_0460 ME10	3800	3500	6000	≤19	0.79	51	128	4.0	2.0	1100	1840	1867	3230
231.1	1849/8	P831_0050K302_0460 ME20	3700	3500	6000	≤24	2.7	52	128	4.0	2.0	1100	1840	1867	3230
231.8	14835/64	P831_0100K202_0230 ME10	4000	3900	6500	≤19	0.87	46	131	3.5	1.5	850	1380	1380	2760
231.8	14835/64	P831_0100K202_0230 ME20	3700	3700	6000	≤32	4.3	47	131	3.5	1.5	850	1380	1380	2760
231.8	14835/64	P831_0100K202_0230 ME30	3500	3500	5000	≤38	9.6	49	131	3.5	1.5	850	1380	1380	2760

i	i_{exakt}	Type	n_{1MAXDB} EL1,2 [rpm]	n_{1MAXDB} EL3,4,5,6 [rpm]	n_{1MAXZB} [rpm]	d_{MW} [mm]	J_1 [kgcm²]	m [kg]	C_2 [Nm/arcmin]	$\Delta\varphi_2$ [arcmin]	$\Delta\varphi_{2red}$ [arcmin]	M_{2N} [Nm]	M_{2acc} [Nm]	M_{2accHT} [Nm]	M_{2NOT} [Nm]
P831K ($M_{2acc,max}$ = 1867 Nm)															
235.3	12943/55	P831_0070K202_0340 ME10	4000	3900	6500	≤19	0.72	46	128	3.5	1.5	1000	1255	1255	2223
235.3	12943/55	P831_0070K202_0340 ME20	3700	3700	6000	≤24	2.6	47	128	3.5	1.5	1000	1255	1255	2223
241.9	1935/8	P831_0070K202_0350 ME10	4000	3900	6500	≤19	0.76	46	128	3.5	1.5	1000	1494	1494	2887
241.9	1935/8	P831_0070K202_0350 ME20	3700	3700	6000	≤24	2.7	47	128	3.5	1.5	1000	1494	1494	2887
278.5	12255/44	P831_0050K302_0560 ME10	3800	3500	6000	≤19	0.75	51	128	4.0	2.0	1100	1541	1541	2729
278.5	12255/44	P831_0050K302_0560 ME20	3700	3500	6000	≤24	2.6	52	128	4.0	2.0	1100	1541	1541	2729
279.5	559/2	P831_0100K202_0280 ME10	4000	3900	6500	≤19	0.81	46	131	3.5	1.5	850	1380	1380	2760
279.5	559/2	P831_0100K202_0280 ME20	3700	3700	6000	≤24	2.7	47	131	3.5	1.5	850	1380	1380	2760
282.8	9331/33	P831_0070K202_0400 ME10	4000	3900	6500	≤19	0.66	46	128	3.5	1.5	784	941	941	1426
323.6	12943/40	P831_0070K202_0460 ME10	4000	3900	6500	≤19	0.71	46	128	3.5	1.5	1000	1494	1494	2887
323.6	12943/40	P831_0070K202_0460 ME20	3700	3700	6000	≤24	2.6	47	128	3.5	1.5	1000	1494	1494	2887
345.5	9675/28	P831_0100K202_0350 ME10	4000	3900	6500	≤19	0.76	46	131	3.5	1.5	850	1380	1380	2760
345.5	9675/28	P831_0100K202_0350 ME20	3700	3700	6000	≤24	2.7	47	131	3.5	1.5	850	1380	1380	2760
353.4	46655/132	P831_0070K202_0500 ME10	4000	3900	6500	≤19	0.64	46	128	3.5	1.5	654	784	784	1338
388.8	9331/24	P831_0070K202_0560 ME10	4000	3900	6500	≤19	0.66	46	128	3.5	1.5	1000	1294	1294	1961
462.3	1849/4	P831_0100K202_0460 ME10	4000	3900	6500	≤19	0.71	46	131	3.5	1.5	850	1380	1380	2760
462.3	1849/4	P831_0100K202_0460 ME20	3700	3700	6000	≤24	2.6	47	132	3.5	1.5	850	1380	1380	2760
486.0	46655/96	P831_0070K202_0690 ME10	4000	3900	6500	≤19	0.64	46	128	3.5	1.5	899	1078	1078	1840
555.4	6665/12	P831_0100K202_0560 ME10	4000	3900	6500	≤19	0.66	46	131	3.5	1.5	850	1380	1380	2760
P931K ($M_{2acc,max}$ = 3105 Nm)															
28.00	28/1	P931_0070K402_0040 ME30	2600	2200	3800	≤38	20	80	303	3.5	–	2076	3105	–	5600
28.00	28/1	P931_0070K402_0040 ME40	2600	2200	3800	≤48	42	84	303	3.5	–	2076	3105	–	5600
30.55	336/11	P931_0070K402_0044 ME30	2600	2200	3800	≤38	19	80	304	3.5	–	2100	3105	–	6109
30.55	336/11	P931_0070K402_0044 ME40	2600	2200	3800	≤48	41	84	303	3.5	–	2100	3105	–	6109
37.95	12943/341	P931_0070K402_0054 ME30	2600	2200	3800	≤38	16	80	304	3.5	–	2100	3105	–	6210
37.95	12943/341	P931_0070K402_0054 ME40	2600	2200	3800	≤48	38	84	304	3.5	–	2100	3105	–	6210
42.00	42/1	P931_0070K402_0060 ME30	2600	2200	3800	≤38	17	80	304	3.5	–	2100	3105	–	6210
42.00	42/1	P931_0070K402_0060 ME40	2600	2200	3800	≤48	39	84	304	3.5	–	2100	3105	–	6210
47.03	1505/32	P931_0070K402_0067 ME20	3000	2600	4500	≤32	8.6	78	303	3.5	–	2100	2656	–	3529
47.03	1505/32	P931_0070K402_0067 ME30	3000	2600	4500	≤38	14	80	304	3.5	–	2100	3105	–	6210
47.03	1505/32	P931_0070K402_0067 ME40	3000	2600	4500	≤48	36	84	304	3.5	–	2100	3105	–	6210
52.19	12943/248	P931_0070K402_0075 ME30	2600	2200	3800	≤38	15	80	305	3.5	–	2100	3105	–	6210
52.19	12943/248	P931_0070K402_0075 ME40	2600	2200	3800	≤48	37	84	305	3.5	–	2100	3105	–	6210
58.64	645/11	P931_0070K402_0084 ME20	3000	2600	4500	≤32	7.2	78	304	3.5	–	2100	3105	–	4399
58.64	645/11	P931_0070K402_0084 ME30	3000	2600	4500	≤38	13	80	305	3.5	–	2100	3105	–	6210
58.64	645/11	P931_0070K402_0084 ME40	3000	2600	4500	≤48	35	84	305	3.5	–	2100	3105	–	6210
64.67	16555/256	P931_0070K402_0092 ME20	3000	2600	4500	≤32	7.8	78	304	3.5	–	2100	3105	–	4852
64.67	16555/256	P931_0070K402_0092 ME30	3000	2600	4500	≤38	13	80	305	3.5	–	2100	3105	–	6210
64.67	16555/256	P931_0070K402_0092 ME40	3000	2600	4500	≤48	35	84	305	3.5	–	2100	3105	–	6210
70.69	9331/132	P931_0070K402_0100 ME20	3400	3000	5000	≤32	6.4	78	304	3.5	–	2100	3105	–	5302
70.69	9331/132	P931_0070K402_0100 ME30	3400	3000	5000	≤38	12	80	305	3.5	–	2100	3105	–	6210
70.69	9331/132	P931_0070K402_0100 ME40	3000	3000	4500	≤48	34	84	305	3.5	–	2100	3105	–	6210
80.63	645/8	P931_0070K402_0115 ME20	3000	2600	4500	≤32	6.7	78	305	3.5	–	2100	3105	–	6049
80.63	645/8	P931_0070K402_0115 ME30	3000	2600	4500	≤38	12	80	305	3.5	–	2100	3105	–	6210
80.63	645/8	P931_0070K402_0115 ME40	3000	2600	4500	≤48	34	84	305	3.5	–	2100	3105	–	6210
88.61	2924/33	P931_0070K402_0125 ME20	3400	3000	5000	≤32	5.7	78	305	3.5	–	2100	3105	–	6210
88.61	2924/33	P931_0070K402_0125 ME30	3400	3000	5000	≤38	11	80	305	3.5	–	2100	3105	–	6210
88.61	2924/33	P931_0070K402_0125 ME40	3000	3000	4500	≤48	33	84	305	3.5	–	2100	3105	–	6210
97.20	9331/96	P931_0070K402_0140 ME20	3400	3000	5000	≤32	6.1	78	305	3.5	–	2100	3105	–	6210
97.20	9331/96	P931_0070K402_0140 ME30	3400	3000	5000	≤38	12	80	305	3.5	–	2100	3105	–	6210
97.20	9331/96	P931_0070K402_0140 ME40	3000	3000	4500	≤48	33	84	305	3.5	–	2100	3105	–	6210
118.6	3913/33	P931_0070K402_0170 ME20	3600	3300	5500	≤32	5.1	78	305	3.5	–	2100	3105	–	6210
118.6	3913/33	P931_0070K402_0170 ME30	3500	3300	5000	≤38	11	80	305	3.5	–	2100	3105	–	6210
118.6	3913/33	P931_0070K402_0170 ME40	3000	3000	4500	≤48	32	84	305	3.5	–	2100	3105	–	6210
121.8	731/6	P931_0070K402_0175 ME20	3400	3000	5000	≤32	5.5	78	305	3.5	–	2100	3105	–	6210
121.8	731/6	P931_0070K402_0175 ME30	3400	3000	5000	≤38	11	80	305	3.5	–	2100	3105	–	6210
121.8	731/6	P931_0070K402_0175 ME40	3000	3000	4500	≤48	33	84	305	3.5	–	2100	3105	–	6210
141.4	9331/66	P931_0070K402_0200 ME20	3600	3300	5500	≤32	4.8	78	305	3.5	–	2100	3105	–	6210
141.4	9331/66	P931_0070K402_0200 ME30	3500	3300	5000	≤38	10	80	305	3.5	–	2100	3105	–	6210
163.0	3913/24	P931_0070K402_0230 ME20	3600	3300	5500	≤32	4.9	78	305	3.5	–	2100	3105	–	6210
163.0	3913/24	P931_0070K402_0230 ME30	3500	3300	5000	≤38	10	80	305	3.5	–	2100	3105	–	6210
163.0	3913/24	P931_0070K402_0230 ME40	3000	3000	4500	≤48	32	84	305	3.5	–	2100	3105	–	6210
177.0	29197/165	P931_0070K402_0250 ME20	3600	3300	5500	≤32	4.6	78	305	3.5	–	2100	3105	–	6210
177.0	29197/165	P931_0070K402_0250 ME30	3500	3300	5000	≤38	9.9	80	305	3.5	–	2100	3105	–	6210

i	i_{exakt}	Type	n_{1MAXDB} EL1,2 [rpm]	n_{1MAXDB} EL3,4,5,6 [rpm]	n_{1MAXZB} [rpm]	d_{MW} [mm]	J_1 [kgcm²]	m [kg]	C_2 [Nm/arcmin]	$\Delta\varphi_2$ [arcmin]	$\Delta\varphi_{2red}$ [arcmin]	M_{2N} [Nm]	M_{2acc} [Nm]	M_{2accHT} [Nm]	M_{2NOT} [Nm]
P931K ($M_{2acc,max}$ = 3105 Nm)															
194.4	9331/48	P931_0070K402_0280 ME20	3600	3300	5500	≤32	4.7	78	305	3.5	–	2100	3105	–	6210
194.4	9331/48	P931_0070K402_0280 ME30	3500	3300	5000	≤38	10	80	305	3.5	–	2100	3105	–	6210
235.7	33712/143	P931_0070K402_0340 ME20	3600	3300	5500	≤24	2.8	78	305	3.5	–	2100	3105	–	5159
243.3	29197/120	P931_0070K402_0350 ME20	3600	3300	5500	≤32	4.5	78	305	3.5	–	2100	3105	–	6210
243.3	29197/120	P931_0070K402_0350 ME30	3500	3300	5000	≤38	9.8	80	305	3.5	–	2100	3105	–	6210
283.6	34314/121	P931_0070K402_0410 ME20	3600	3300	5500	≤24	2.8	78	305	3.5	–	2092	2510	–	4446
324.2	4214/13	P931_0070K402_0460 ME20	3600	3300	5500	≤24	2.8	78	305	3.5	–	2100	3105	–	6210
353.0	38829/110	P931_0070K402_0500 ME20	3600	3300	5500	≤24	2.7	78	305	3.5	–	1830	2196	–	3890
389.9	17157/44	P931_0070K402_0560 ME20	3600	3300	5500	≤24	2.7	78	305	3.5	–	2100	3105	–	6113
485.4	38829/80	P931_0070K402_0690 ME20	3600	3300	5500	≤24	2.7	78	305	3.5	–	2100	3020	–	5349

11.3 Dimensional drawings

In this chapter, you can find the dimensions of the gear units as well as example dimensions of the mountable motor adapters.

Dimensions can exceed the specifications of ISO 2768-mK due to casting tolerances or accumulation of individual tolerances.

We reserve the right to make dimensional changes due to ongoing technical development.

You can download 3D models of our standard drives at http://configurator.stoeber.de.

Tolerances

Solid shaft	Tolerance
Fit	ISO k6
Feather keys	DIN 6885-1, high form A
Balancing	With half feather key

Centering holes in solid shafts in accordance with DIN 332-2, DR shape

Thread size	M4	M5	M6	M8	M10	M12	M16	M20	M24
Thread depth [mm]	10	12.5	16	19	22	28	36	42	50

11.3.1 G shaft design (solid shaft without feather key)

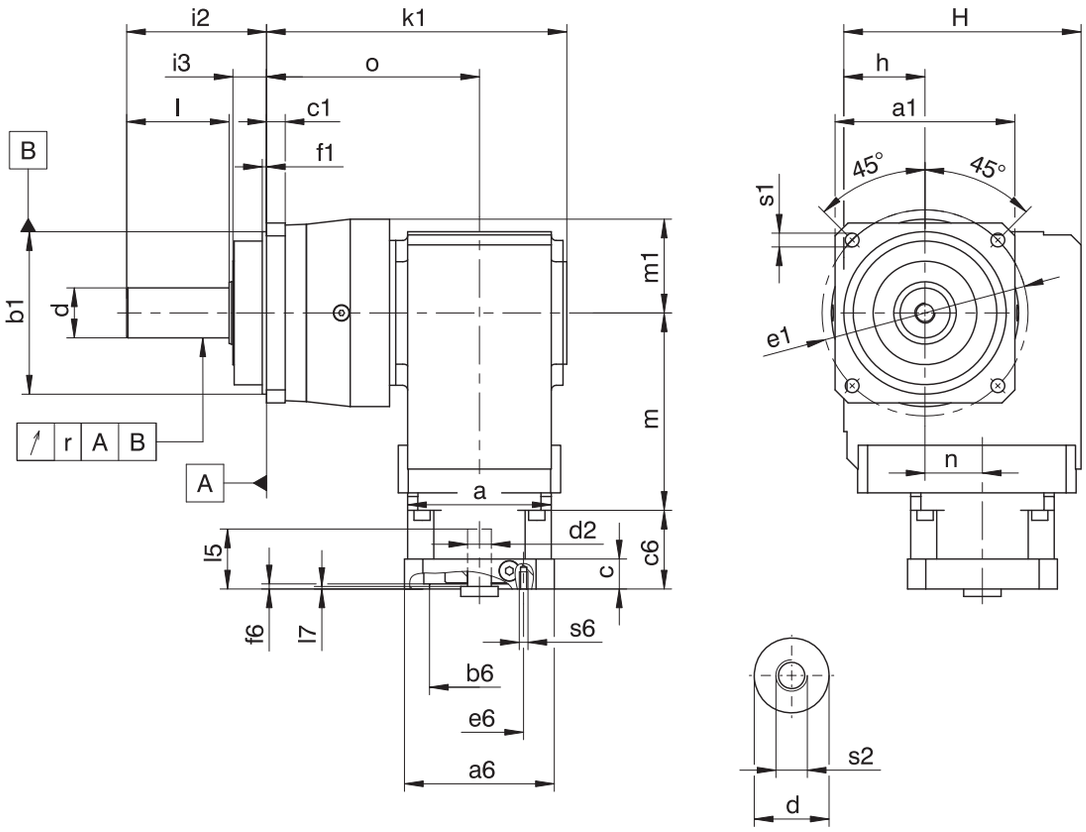

– The radial runout specification applies only to the reinforced bearing D.

Dimensions of gear units

Type	□a1	Øb1	c1	Ød	Øe1	f1	h	H	i2	i3	k1	l	m1	o	r	Øs1	s2
P531_K102_	101	90_{h6}	10	32_{k6}	120	15.0	60	160	88	28	199.5	58	60.0	143.5	0.030	9.0	M12
P731_K102_	144	130_{h6}	15	40_{k6}	165	3.5	60	160	112	27	212.5	82	72.0	156.5	0.035	11.0	M16
P731_K202_	144	130_{h6}	15	40_{k6}	165	3.5	65	190	112	27	240.5	82	72.0	170.5	0.035	11.0	M16
P831_K202_	190	160_{h6}	15	55_{k6}	215	10.0	65	190	112	27	277.5	82	95.0	207.5	0.035	13.5	M20
P831_K302_	190	160_{h6}	15	55_{k6}	215	10.0	75	213	112	27	291.0	82	95.0	215.0	0.035	13.5	M20
P931_K402_	212	180_{h6}	17	75_{k6}	250	10.0	90	240	143	34	350.5	105	112.5	260.5	0.040	17.5	M20

Type	ME10			ME20			ME30			ME40		
	a	m	n	a	m	n	a	m	n	a	m	n
P531_K102_	□98	124	36	□115	128	36	–	–	–	–	–	–
P731_K102_	□98	124	36	□115	128	36	–	–	–	–	–	–
P731_K202_	□98	143	46	□115	147	46	□145	149	46	–	–	–
P831_K202_	□98	143	46	□115	147	46	□145	149	46	–	–	–
P831_K302_	∅140	163	53	□115	167	53	□145	169	53	–	–	–
P931_K402_	–	–	–	∅160	187	60	□145	189	60	□190	192	60

Example dimensions for the motor connection

Type	Øb6	Øe6	Ød2max	l5	□a6	c	c6	f6	l7	s6
P_K_ME10	95^{H7}	115	19	41	100	21	61	4.0	3.0	M8
P_K_ME20	110^{H7}	130	32	53	120	24	74	4.0	3.5	M8
P_K_ME30	130^{H7}	165	38	62	150	26	86	5.5	4.5	M10
P_K_ME40	180^{H7}	215	48	82	204	35	123	5.5	5.5	M12

In the table above, you will find example dimensions for the motor connection for the ME motor adapter. **Note that when dimension c is lengthened (depending on the motor used), dimensions c6, l5 and lg are also lengthened accordingly.**

You will find additional motor connection dimensions for the ME motor adapter in our STOBER Configurator at http://configurator.stoeber.de. Here, you can directly download a 3D model of your drive.

11.3.2 P shaft design (solid shaft with feather key)

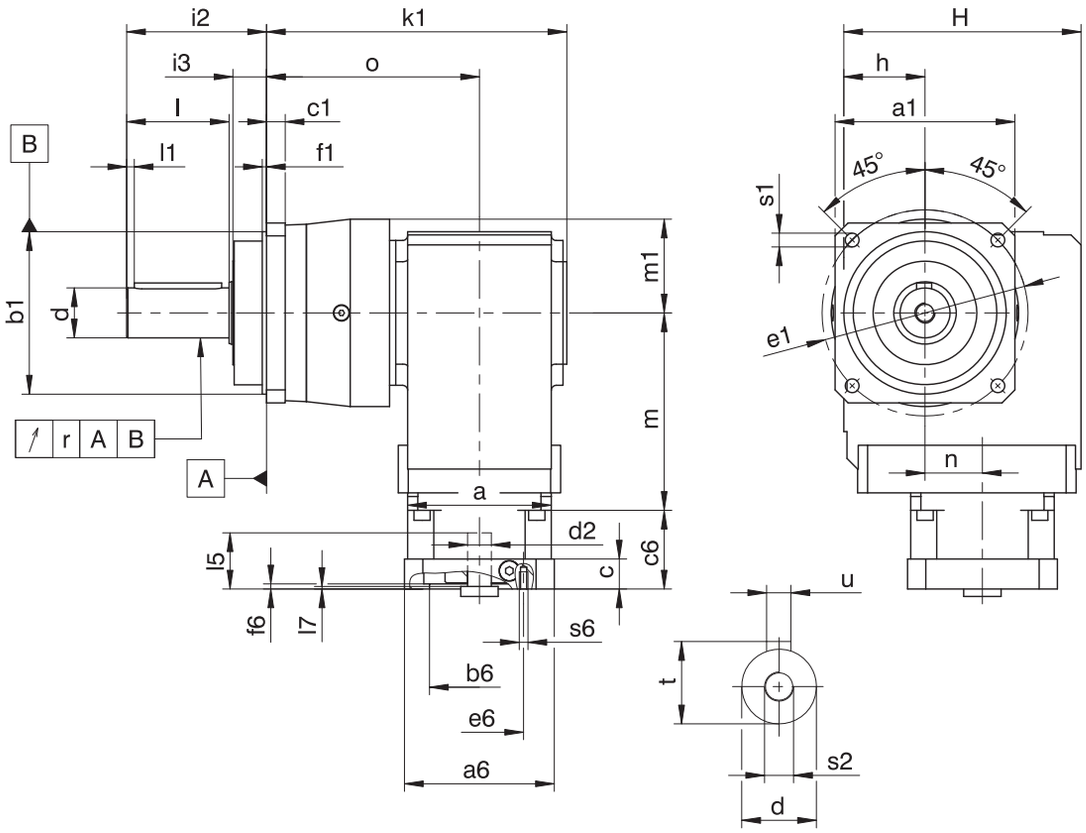

– The radial runout specification applies only to the reinforced bearing D.

Dimensions of gear units

Type	□a1	Øb1	c1	Ød	Øe1	f1	h	H	i2	i3	k1	l	l1	m1	o	r	Øs1	s2	t	u
P531_K102_	101	90_{h6}	10	32_{k6}	120	15.0	60	160	88	28	199.5	58	3	60.0	143.5	0.030	9.0	M12	35.0	A10×8×50
P731_K102_	144	130_{h6}	15	40_{k6}	165	3.5	60	160	112	27	212.5	82	4	72.0	156.5	0.035	11.0	M16	43.0	A12×8×70
P731_K202_	144	130_{h6}	15	40_{k6}	165	3.5	65	190	112	27	240.5	82	4	72.0	170.5	0.035	11.0	M16	43.0	A12×8×70
P831_K202_	190	160_{h6}	15	55_{k6}	215	10.0	65	190	112	27	277.5	82	6	95.0	207.5	0.035	13.5	M20	59.0	A16×10×70
P831_K302_	190	160_{h6}	15	55_{k6}	215	10.0	75	213	112	27	291.0	82	6	95.0	215.0	0.035	13.5	M20	59.0	A16×10×70
P931_K402_	212	180_{h6}	17	75_{k6}	250	10.0	90	240	143	34	350.5	105	7	112.5	260.5	0.040	17.5	M20	79.5	A20×12×90

Type	ME10			ME20			ME30			ME40		
	a	m	n	a	m	n	a	m	n	a	m	n
P531_K102_	□98	124	36	□115	128	36	–	–	–	–	–	–
P731_K102_	□98	124	36	□115	128	36	–	–	–	–	–	–
P731_K202_	□98	143	46	□115	147	46	□145	149	46	–	–	–
P831_K202_	□98	143	46	□115	147	46	□145	149	46	–	–	–
P831_K302_	∅140	163	53	□115	167	53	□145	169	53	–	–	–
P931_K402_	–	–	–	∅160	187	60	□145	189	60	□190	192	60

Example dimensions for the motor connection

Type	Øb6	Øe6	Ød2max	l5	□a6	c	c6	f6	l7	s6
P_K_ME10	95^{H7}	115	19	41	100	21	61	4.0	3.0	M8
P_K_ME20	110^{H7}	130	32	53	120	24	74	4.0	3.5	M8
P_K_ME30	130^{H7}	165	38	62	150	26	86	5.5	4.5	M10
P_K_ME40	180^{H7}	215	48	82	204	35	123	5.5	5.5	M12

In the table above, you will find example dimensions for the motor connection for the ME motor adapter. **Note that when dimension c is lengthened (depending on the motor used), dimensions c6, l5 and lg are also lengthened accordingly.**

You will find additional motor connection dimensions for the ME motor adapter in our STOBER Configurator at http://configurator.stoeber.de. Here, you can directly download a 3D model of your drive.

11.4 Type designation

In this chapter, you can find an explanation of the type designation with the associated options.

Additional ordering information not included in the type designation can be found at the end of the chapter.

Example code

P	5	3	1	S	G	S	S	0050	K102VF	0060	ME20

Explanation

Code	Designation	Design
P	Type	Planetary gear unit
5	Size	5 (example)
3	Generation	Generation 3
1	Stages	Single-stage
S	Housing	Standard
G P	Shaft	Solid shaft without feather key Solid shaft with feather key
S D Z	Bearing	Standard bearing Axially reinforced bearing (P3 – P9) Radially reinforced bearing (P3 – P9)[1]
S R	Backlash	Standard Reduced
0050	Transmission ratio of output (i x 10)	i = 5 (example)
K102VF	Input	K1 right-angle geared motor (example)
0060	Transmission ratio of input (i x 10)	i = 6 (example)
ME20 MQ MB[2]	Motor adapter	ME20 motor adapter (example) with EasyAdapt coupling Square motor adapter with backlash-free plug-in coupling ServoStop motor adapter with brake

In order to complete the type designation, also specify:

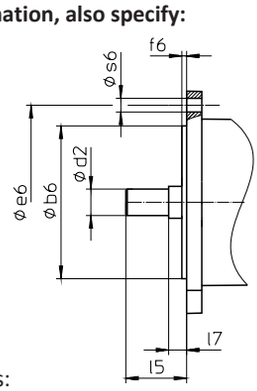

- Motor type or motor dimensions:

  To choose a suitable motor connection, use the STOBER Configurator at http://configurator.stoeber.de and choose your motor or the dimensions of the motor connection.
- Mounting position, see the chapter [▸ 11.5.5]
- The position of locking screw access, see the chapter [▸ 11.5.7]
- Output gear unit side 3 or 4, see the chapter [▸ 11.5.5]
- Radial shaft seal rings at the output made of NBR or FKM (option), see the chapter [▸ 11.6.4]
- Reverse operation of the output shaft from ±20° to ±90° and horizontal installation, note the chapter [▸ 11.6.5]
- Pinion lock for motor adapter (optional)
- Double seal for ME motor adapter (optional)

[1] Not for reduced-backlash option.

[2] You can find more details in the catalog for ServoStop servo gear unit with brake ID 443234.

11.4.1 Nameplate

An example gear unit nameplate is explained in the figure below.

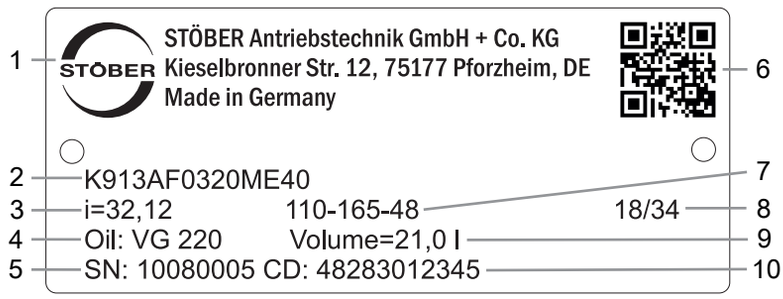

Code	Designation
1	Name of manufacturer
2	Type designation
3	Gear ratio of the gear unit
4	Lubricant specification
5	Serial number of the gear unit
6	QR code (link to product information)
7	Dimensions of the motor adapter (pilot/bolt circle/motor shaft diameter)
8	Date of manufacture (year/calendar week)
9	Lubricant fill volume
10	Customer-specific data

11.5 Product description

11.5.1 Input options

ME motor adapter for attaching synchronous servo motors

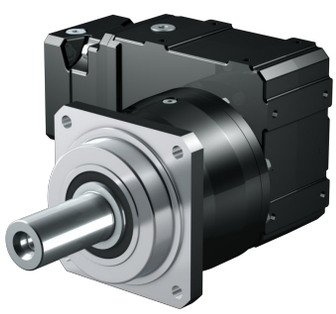

http://www.stoeber.de/en/PKME

MB motor adapter with brake for attaching synchronous servo motors

http://www.stoeber.de/en/PKMB

EZ synchronous servo motor

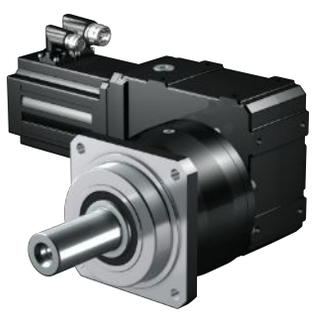

http://www.stoeber.de/en/PKEZ

11.5.2 Motor adapter with EasyAdapt coupling (ME)

In this chapter, you will find a description of the EasyAdapt coupling.

Properties:

- Fast and easy motor attachment
- Rugged clamp coupling with expanding function
- Lowest mass moments of inertia for the highest dynamics
- Balanced for smooth running without vibration, even at high speeds
- Large motor shaft diameter range
- Error-free, thanks to exact centering of the motor

Fig. 1: EasyAdapt coupling

11.5.3 Square motor adapter with backlash-free plug-in coupling (MQ)

In this chapter, you will find a description of the backlash-free plug-in coupling (jaw coupling).

Properties:

- Fast and easy motor attachment
- Removal of the motor possible in any position
- With integrated thermal length compensation, compensates for linear expansion of the motor shaft
- Motor shaft decoupled from axial forces
- Balanced for smooth running without vibration, even at high speeds
- Large motor shaft diameter range
- Error-free, thanks to exact centering of the motor

Fig. 2: Backlash-free plug-in coupling

For all technical data and combinations with our gear units, refer to http://configurator.stoeber.de.

11.5.4 Installation conditions

The specified torques and forces only apply when gear units are fastened on the machine side using screws of strength class 12.9. In addition, the gear housings must be adjusted at the pilot. The machine-side fit must be H7.

11.5.5 Mounting positions

The following table shows the standard mounting positions.

The numbers identify the gear unit sides. The mounting position is defined by the gear side facing downwards.

EL1	EL2	EL3
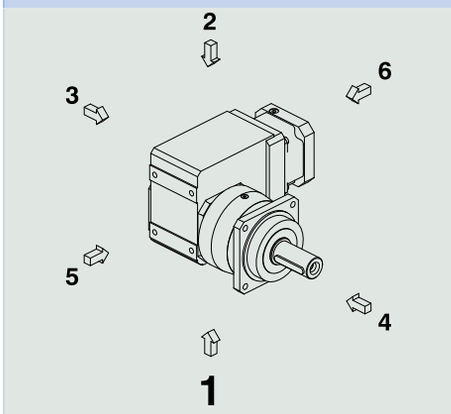	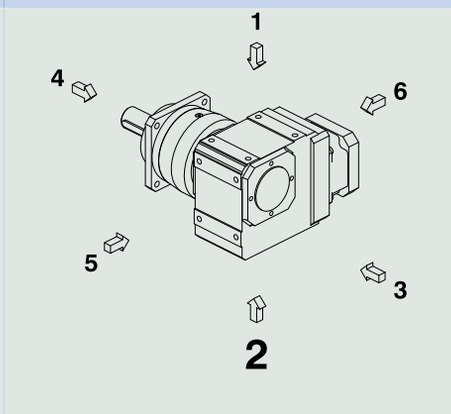	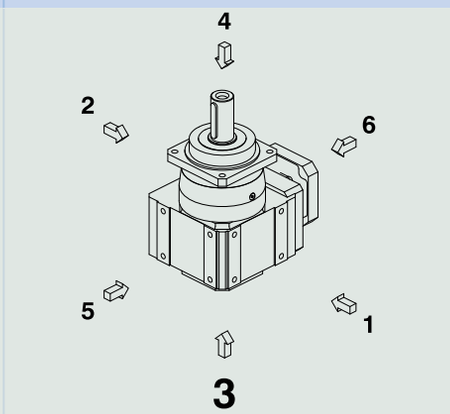
EL4	**EL5**	**EL6**
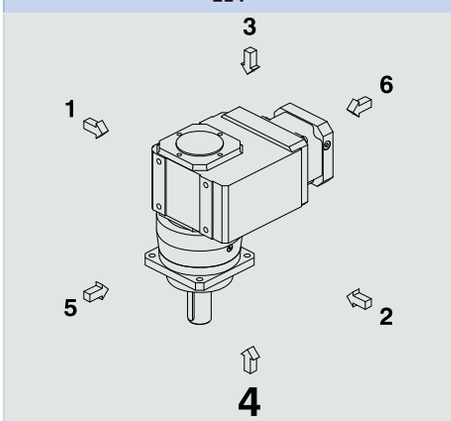	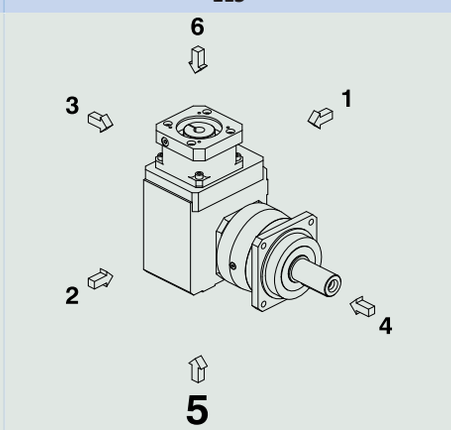	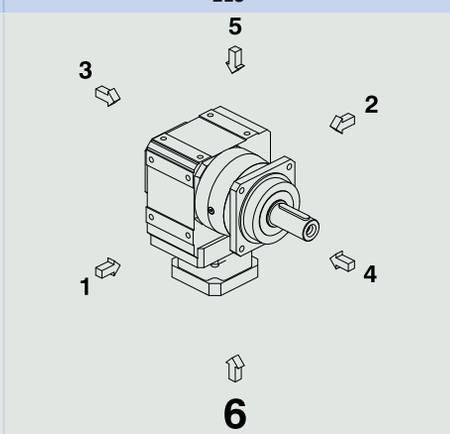

Since the lubricant filling volume of the gear unit depends on the mounting position, the mounting position must be specified when ordering.

11.5.6 Lubricants

STOBER fills the gear units with the amount and type of lubricant specified on the nameplate. The filling volume and the structure of the gear units depend on the mounting position.

Only install the gear units in the intended mounting position! Reposition the gear units only after consulting STOBER. Otherwise, STOBER assumes no liability for the gear units.

You will receive lubricants for use in the food industry upon request.

11.5.7 Position of locking screw access

Mounting position EL1	Mounting position EL4
Locking screw in 270° position (standard)	Locking screw in 270° position (standard)
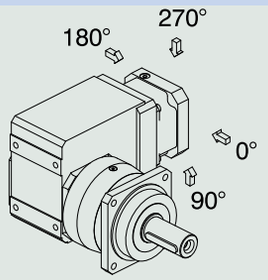	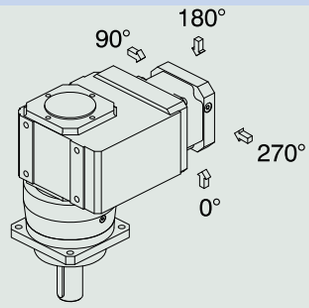

Indicate variations for your gear unit in the order.

Note that the access hole for the locking screw also rotates when the gear unit is rotated to another mounting position.

11.5.8 Other product features

Feature	Value
Max. permitted gear unit temperature (on the surface of the gear unit)	≤ 90 °C
Paint	Black RAL 9005
Explosion-proof design in accordance with (ATEX) Directive 2014/34/EU (optional)	Available, see Document ID 441677_en
Efficiency:	
η_{get} three-stage	94%
Protection class: [3]	IP65

11.5.9 Direction of rotation

Output side 4	Output side 3
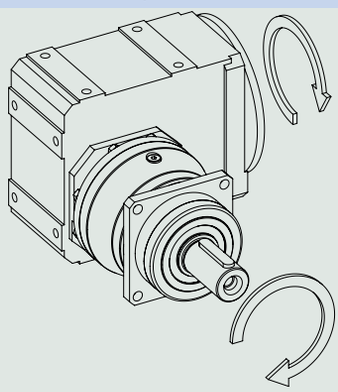	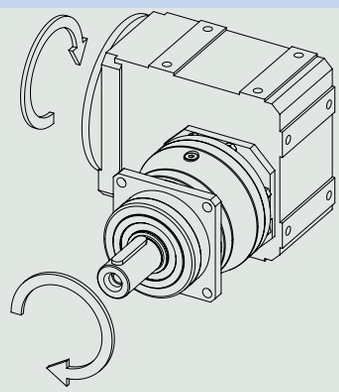

The pictures show mounting position EL1.

11.6 Project configuration

Project your drives using our SERVOsoft designing software. Download SERVOsoft for free at https://www.stoeber.de/en/ServoSoft.

Observe the limit conditions in this chapter to ensure a safe design for your drives.

An explanation of the formula symbols can be found in the chapter [▸ 18.1].

[3] Observe the protection class of all the components.

11.6.1 Drive selection

The formula symbols for values actually present in the application are marked with *.

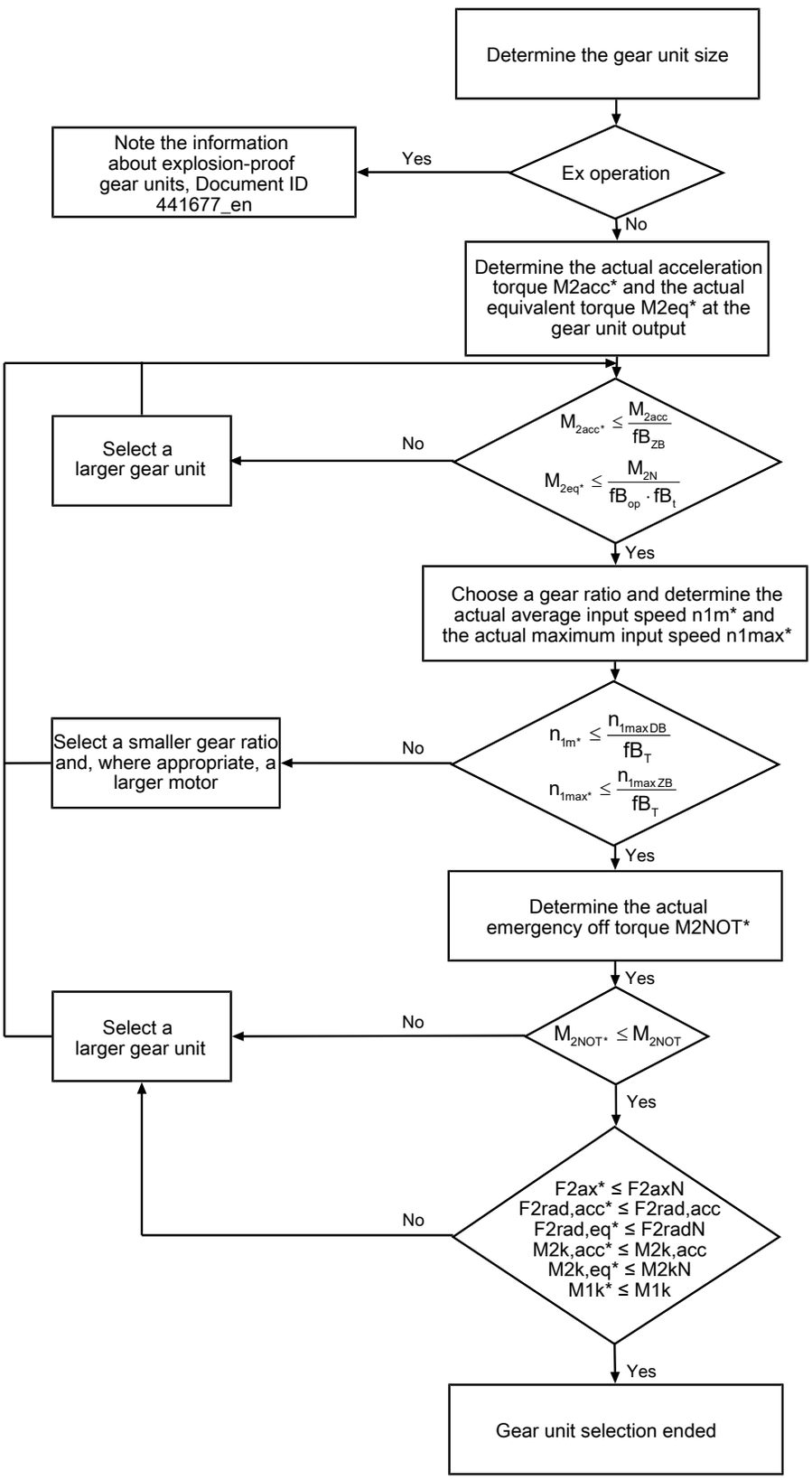

Calculate the forces and tilting torques in the chapter Permitted shaft loads.

Refer to the selection tables for the values for i, n_{1maxDB}, n_{1maxZB}, M_{2acc} (M_{2accHT} for reduced backlash), M_{2NOT} and M_{2N}.

The values for fB_T, fB_{op}, fB_t and fB_{ZB} can be found in the corresponding tables in this chapter.

Example of cyclic operation

The following calculations are based on a representation of the power taken from the output based in accordance with the following example:

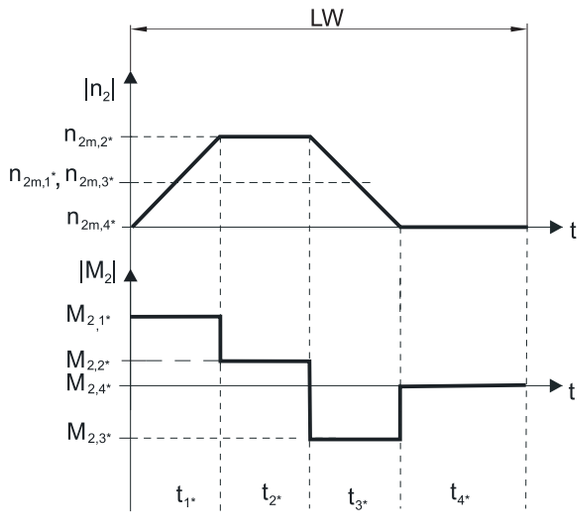

Calculation of the actual maximum acceleration torque

$$M_{2acc*} = J_{tot} \cdot \frac{\Delta n_2}{9.55 \cdot \Delta t} + M_{L*}$$

Calculation of the actual average input speed

$$n_{1m*} = n_{2m*} \cdot i$$

$$n_{2m*} = \frac{|n_{2m,1*}| \cdot t_{1*} + \ldots + |n_{2m,n*}| \cdot t_{n*}}{t_{1*} + \ldots + t_{n*}}$$

If $t_{1*} + \ldots + t_{3*} \geq 6$ min, calculate n_{2m*} without the rest phase t_{4*}.

The values for the ratio i can be found in the selection tables.

Calculation of the actual emergency-off torque

$$M_{2NOT*} = J_{tot} \cdot \frac{\Delta n_2}{9.55 \cdot \Delta t} + M_{L*}$$

Calculation of the actual equivalent torque

$$M_{2eq*} = \sqrt[3]{\frac{|n_{2m,1*}| \cdot t_{1*} \cdot |M_{2,1*}{}^3| + \ldots + |n_{2m,n*}| \cdot t_{n*} \cdot |M_{2,n*}{}^3|}{|n_{2m,1*}| \cdot t_{1*} + \ldots + |n_{2m,n*}| \cdot t_{n*}}}$$

Operating factors

Operating mode	fB_{op}
Uniform continuous operation	1.00
Cyclic operation	1.25
Reversing load cyclic operation	1.40

Run time	fB_t
Daily runtime ≤ 8 h	1.00
Daily runtime ≤ 16 h	1.15
Daily runtime ≤ 24 h	1.20

Cyclic operation	fB_{ZB}
≤ 1000 load changes/hour (LW/h)	1.00
> 1000 load changes/hour (LW/h)	1.15

Temperature		fB_T
Motor cooling	**Surrounding temperature**	
Motor with forced ventilation	≤ 20 °C	0.9
	≤ 30 °C	1.0
	≤ 40 °C	1.15
Motor with convection cooling	≤ 20 °C	1.0
	≤ 30 °C	1.1
	≤ 40 °C	1.25

Notes

- The maximum permitted gear unit temperature of ≤ 90 °C must not be exceeded. Doing so may result in damage to the gear unit.
- M_{2acc}, M_{2accHT}: Solid shaft design without feather key (we generally recommend this shaft design for cyclic operation)

11.6.2 Permitted shaft loads for the output shaft

The values specified in the tables apply to the permitted shaft loads:

- For shaft dimensions in accordance with the catalog
- For output speeds n_{2m*} ≤ 100 rpm ($F^{2axN} = F_{2ax100}$; $F_{2radN} = F_{2rad100}$; $M_{2kN} = M_{2k100}$)
- Only if radial forces on the gear unit are stabilized by its pilots (housing, flange shaft)

Permitted shaft loads for standard bearing S

Type	z_2 [mm]	F_{2ax100} [N]	$F_{2rad100}$ [N]	$F_{2rad,acc}$ [N]	M_{2k100} [Nm]	$M_{2k,acc}$ [Nm]
P2	17.0	500	1200	1300	34	36
P3	17.5	1000	2500	2500	79	79
P4	18.5	1500	4000	4500	146	164
P5	19.5	2300	6500	7000	315	340
P7	23.0	2900	8500	9000	544	576
P8	24.5	4700	13000	18000	852	1179
P9	33.0	6000	18000	27000	1539	2309

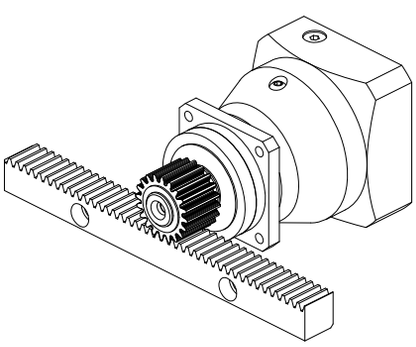

Fig. 3: Recommendation for bearing assignment S (e.g. for straight-cut gearing)

Permitted shaft loads for axially reinforced bearing D

Type	z_2 [mm]	F_{2ax100} [N]	$F_{2rad100}$ [N]	$F_{2rad,acc}$ [N]	M_{2k100} [Nm]	$M_{2k,acc}$ [Nm]
P3	20.0	2500	2750	2750	94	94
P4	22.5	4000	4500	5000	182	203
P5	25.5	6000	7000	8000	382	436
P7	29.0	10000	9500	10000	665	700
P8	32.0	15500	15000	18000	1095	1314
P9	44.0	25000	20000	30000	1930	2895

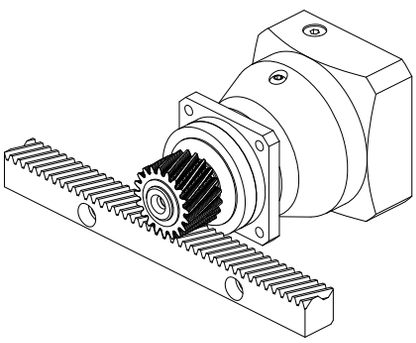

Fig. 4: Recommendation for bearing assignment D (e.g. for helical gearing)

Permitted shaft loads for radially reinforced bearing Z

Type	z_2 [mm]	F_{2ax100} [N]	$F_{2rad100}$ [N]	$F_{2rad,acc}$ [N]	M_{2k100} [Nm]	$M_{2k,acc}$ [Nm]
P3	17.5	600	3000	3000	95	95
P4	18.5	1000	5000	5000	183	183
P5	19.5	1600	8000	8000	388	388
P7	23.0	2000	10000	10000	640	640
P8	24.5	3600	18000	18000	1179	1179
P9	33.0	5000	27000	35000	2309	2993

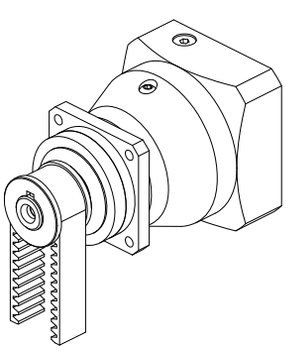

Fig. 5: Recommendation for bearing assignment Z (e.g. for belt drives)

For other output speeds, download diagrams at http://configurator.stoeber.de.

The following applies to output speeds n_{2m*} > 100 rpm:

$$F_{2axN} = \frac{F_{2ax100}}{\sqrt[3]{\frac{n_{2m*}}{100\ \text{rpm}}}} \qquad F_{2radN} = \frac{F_{2rad100}}{\sqrt[3]{\frac{n_{2m*}}{100\ \text{rpm}}}} \qquad M_{2kN} = \frac{M_{2k100}}{\sqrt[3]{\frac{n_{2m*}}{100\ \text{rpm}}}}$$

The values for F_{2ax100}, $F_{2rad100}$ and M_{2k100} can be found in the table "Permitted shaft loads" in this chapter.

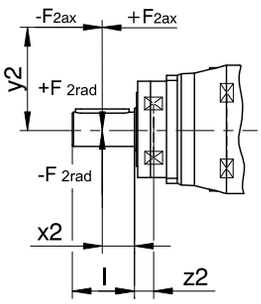

Fig. 6: Force application points

The specified values for $F_{2rad100}$ and $F_{2rad,acc}$ refer to an application of force at the center of the output shaft: $x_2 = l/2$.

Shaft dimensions can be found in the "Dimensional drawings" chapter.

The following applies to other force application points:

$$M_{2k,acc*} = \frac{2 \cdot F_{2ax*} \cdot y_2 + F_{2rad,acc*} \cdot (x_2 + z_2)}{1000} \leq M_{2k,acc}$$

$$F_{2rad,acc*} \leq F_{2rad,acc}$$

$$F_{2ax*} \leq F_{2axN}$$

The values for $F_{2rad,acc}$ and $M_{2k,acc}$ can be found in the table "Permitted shaft loads" in this chapter.

For applications with multiple axial and/or radial forces, you must add the forces as vectors.

In the event of EMERGENCY OFF operation (max. 1000 load changes), you can multiply the permitted forces and torques for F_{2ax100}, $F_{2rad100}$ and M_{2k100} by a factor of two.

Also note the calculation for equivalent values:

$$M_{2k,eq*} = \sqrt[3]{\frac{|n_{2m,1*}| \cdot t_{1*} \cdot |M_{2k,acc,1*}{}^3| + \ldots + |n_{2m,n*}| \cdot t_{n*} \cdot |M_{2k,acc,n*}{}^3|}{|n_{2m,1*}| \cdot t_{1*} + \ldots + |n_{2m,n*}| \cdot t_{n*}}} \leq M_{2kN}$$

$$F_{2rad,eq*} = \sqrt[3]{\frac{|n_{2m,1*}| \cdot t_{1*} \cdot |F_{2rad,acc,1*}{}^3| + \ldots + |n_{2m,n*}| \cdot t_{n*} \cdot |F_{2rad,acc,n*}{}^3|}{|n_{2m,1*}| \cdot t_{1*} + \ldots + |n_{2m,n*}| \cdot t_{n*}}} \leq F_{2radN}$$

The following apply to the bearing service life L_{10h} ($ED_{10} \leq 40\%$):

$L_{10h} > 10000$ h with $1 < M_{2kN}/M_{2k*} < 1.25$

$L_{10h} > 20000$ h with $1.25 < M_{2kN}/M_{2k*} < 1.5$

$L_{10h} > 30000$ h with $1.5 < M_{2kN}/M_{2k*}$

For different duty cycles:

$$L_{10h} > L_{10h(ED_{10}=40\%)} \cdot \frac{40\%}{ED_{10}}$$

11.6.3 Permitted breakdown torques at the gear unit input

For a horizontal mounting position of the motor, verify that the permitted breakdown torque at the gear unit input is not exceeded before installation on a STOBER gear unit. You can find information for how to do that in this chapter.

Calculate the actual breakdown torque as follows:

$M_{1k*} = F_{1k*} \bullet l_{sp} \leq M_{1k}$

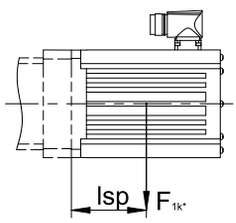

Type	M_{1k} [Nm]
ME10	25
ME20	60
ME30	125
ME40	250
ME50	600

11.6.4 Recommendation for radial shaft seal rings

For a duty cycle > 60% and higher surrounding temperatures, we recommend radial shaft seal rings made of FKM at the output.

Properties:

- Excellent temperature resistance
- High chemical stability
- Very good resistance to aging
- Excellent resistance in oils and greases
- For use in the food, beverage and pharmaceutical industries

Leak-proofness

Our gear units are equipped with high-quality radial shaft seal rings and checked for leaks. However, a leak cannot be fully ruled out over the length of use of a gear unit. If you use a gear unit with goods incompatible with the lubricant, you must take measures to prevent direct contact with the gear unit lubricant in case of a leak.

11.6.5 Reverse operation

To ensure lubrication for circulating gearing parts during cyclic reverse operation from ± 20° to ± 90° at the output, pay careful attention to the position of the output shaft for the horizontal mounting of the gear unit, as shown in the diagrams below. The images show the center position of reverse operation. Cyclic reverse operation ≤ ± 20° on request.

Solid shaft without feather key	Solid shaft with feather key
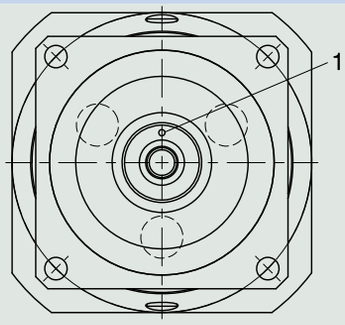	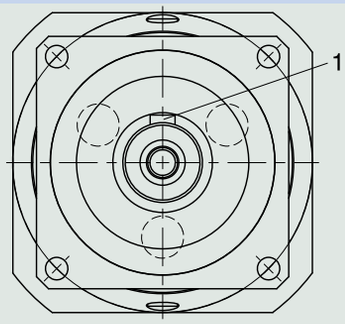
1 Position of the mark: top	1 Position of the feather key: top

Notes

- If you use the solid shaft without a feather key (G), you must note the position of the mark during assembly.
- As an alternative, you can use the solid shaft with a feather key (P). In that case, the feather key functions for position orientation. For a backlash-free connection, also use a clamp.

11.7 Additional documentation

Additional documentation related to the product can be found at
http://www.stoeber.de/en/downloads/

Enter the ID of the documentation in the Search... field.

Documentation	ID
Operating manual for KL/KS/PHK/PHKX/PHQK/PK/PKX right-angle servo gear units and right-angle servo geared motors	443150_en
Operating manual for explosion-proof KL/KS/PHK/PHKX/PHQK/PK/PKX right-angle gear units	443005_en
Information explosion-proof gear units	441677_en

12 PHKX right-angle planetary gear units

Table of contents

12.1 Overview 248

12.2 Selection tables 249

12.3 Dimensional drawings 252

12.4 Type designation 254

12.4.1 Type designation PH3KX_ – PH8KX_ 254

12.4.2 Nameplate 255

12.5 Product description 255

12.5.1 Input options 255

12.5.2 Motor adapter with FlexiAdapt coupling (MF) 256

12.5.3 Installation conditions 256

12.5.4 Mounting positions 257

12.5.5 Lubricants 257

12.5.6 Position of locking screw access 258

12.5.7 Other product features 258

12.5.8 Direction of rotation 258

12.6 Project configuration 258

12.6.1 Drive selection 259

12.6.2 Permitted shaft loads for the output shaft 261

12.6.3 Permitted breakdown torques at the gear unit input 263

12.6.4 Recommendation for radial shaft seal rings 263

12.6.5 Reverse operation 264

12.7 Additional documentation 264

12 PHKX right-angle planetary gear units

12.1 Overview

High-performance precision right-angle planetary gear units

Features

Power density	★★★★★
Backlash	★★★★★
Price category	€€€€
Shaft load	★★★★★
Smooth operation	★★☆☆☆
Torsional stiffness	★★★★☆
Mass moment of inertia	★★☆☆☆
Helical gearing	✓
Maintenance-free	✓
Small installation space	✓
Continuous operation without cooling	✓
Stiff output bearings due to pretension	✓
Reinforced output bearing (PH3 – PH5)	✓ (optional)
Easy and reliable attachment to any synchronous servo motor	✓

Key ★☆☆☆☆ good | ★★★★★ excellent
€ Economy | €€€€€ Premium

Technical data

i	4 – 300
M_{2acc}	60 – 2300 Nm
$\Delta\phi_2$	1 – 6 arcmin
η_{get}	92 – 95 %

12.2 Selection tables

The technical data specified in the selection tables applies to:

- Installation altitudes up to 1000 m above sea level
- Surrounding temperatures from 0 °C to 40 °C
- Without consideration for thermal limiting performance

You can find the mass moment of inertia J_1 for smaller motor shaft diameters and all other technical data at http://configurator.stoeber.de.

In the case of the version with a reinforced bearing and gear ratios ≤ 5, the maximum permitted input speed n_{1maxZB} is reduced. You can find values at http://configurator.stoeber.de

An explanation of the formula symbols can be found in the chapter [▸ 18.1].

i	i_{exakt}	Type	n_{1MAXDB} EL1,2,5,6 [rpm]	n_{1MAXDB} EL3,4 [rpm]	n_{1MAXZB} [rpm]	d_{MW} [mm]	J_1 [kgcm²]	m [kg]	$\Delta\varphi_2$ [arcmin]	$\Delta\varphi_{2red}$ [arcmin]	C_2 [Nm/arcmin]	L_{pA} [dB(A)]	M_{2N} [Nm]	M_{2acc} [Nm]	M_{2accHT} [Nm]	M_{2NOT} [Nm]
PH331KX ($M_{2acc,max}$ = 77 Nm)																
5.000	5/1	PH331_0050KX301_0010 MF	3000	2500	4500	≤19	1.1	3.5	6.0	4.0	6.9	70	45	62	62	115
7.000	7/1	PH331_0070KX301_0010 MF	3000	2500	4500	≤19	1.0	3.5	5.5	3.5	8.4	70	45	75	77	150
10.00	10/1	PH331_0050KX301_0020 MF	3500	3000	5500	≤19	0.82	3.5	6.0	4.0	6.9	66	45	62	62	130
14.00	14/1	PH331_0070KX301_0020 MF	3500	3000	5500	≤19	0.81	3.5	5.5	3.5	8.4	66	45	75	77	150
15.00	15/1	PH331_0050KX301_0030 MF	3500	3500	6000	≤19	0.75	3.5	6.0	4.0	6.9	64	45	62	62	130
20.00	20/1	PH331_0100KX301_0020 MF	3500	3000	5500	≤19	0.81	3.5	5.0	3.0	7.8	66	36	60	60	120
21.00	21/1	PH331_0070KX301_0030 MF	3500	3500	6000	≤19	0.75	3.5	5.5	3.5	8.4	64	45	75	77	150
30.00	30/1	PH331_0100KX301_0030 MF	3500	3500	6000	≤19	0.75	3.5	5.0	3.0	7.8	64	36	60	60	120
PH332KX ($M_{2acc,max}$ = 85 Nm)																
35.00	35/1	PH332_0350KX301_0010 MF	3000	2500	4500	≤19	1.0	3.9	4.5	2.5	13	70	50	80	85	160
40.00	40/1	PH332_0200KX301_0020 MF	3500	3000	5500	≤19	0.81	3.9	4.5	2.5	13	66	45	80	85	160
50.00	50/1	PH332_0250KX301_0020 MF	3500	3000	5500	≤19	0.81	3.9	4.5	2.5	13	66	50	80	85	160
56.00	56/1	PH332_0280KX301_0020 MF	3500	3000	5500	≤19	0.81	3.9	4.5	2.5	12	66	50	75	75	150
60.00	60/1	PH332_0200KX301_0030 MF	3500	3500	6000	≤19	0.75	3.9	4.5	2.5	13	64	45	80	85	160
70.00	70/1	PH332_0350KX301_0020 MF	3500	3000	5500	≤19	0.81	3.9	4.5	2.5	13	66	50	80	85	160
75.00	75/1	PH332_0250KX301_0030 MF	3500	3500	6000	≤19	0.75	3.9	4.5	2.5	13	64	50	80	85	160
80.00	80/1	PH332_0400KX301_0020 MF	3500	3000	5500	≤19	0.81	3.9	4.5	2.5	8.9	66	50	67	67	134
84.00	84/1	PH332_0280KX301_0030 MF	3500	3500	6000	≤19	0.75	3.9	4.5	2.5	12	64	50	75	75	150
100.0	100/1	PH332_0500KX301_0020 MF	3500	3000	5500	≤19	0.81	3.9	4.0	2.0	12	66	50	75	75	150
105.0	105/1	PH332_0350KX301_0030 MF	3500	3500	6000	≤19	0.75	3.9	4.5	2.5	13	64	50	80	85	160
120.0	120/1	PH332_0400KX301_0030 MF	3500	3500	6000	≤19	0.75	3.9	4.5	2.5	8.9	64	50	67	67	134
140.0	140/1	PH332_0700KX301_0020 MF	3500	3000	5500	≤19	0.80	3.9	4.0	2.0	11	66	53	69	69	138
150.0	150/1	PH332_0500KX301_0030 MF	3500	3500	6000	≤19	0.75	3.9	4.0	2.0	12	64	50	75	75	150
200.0	200/1	PH332_1000KX301_0020 MF	3500	3000	5500	≤19	0.80	3.9	4.0	2.0	8.8	66	46	60	60	120
210.0	210/1	PH332_0700KX301_0030 MF	3500	3500	6000	≤19	0.75	3.9	4.0	2.0	11	64	53	69	69	138
300.0	300/1	PH332_1000KX301_0030 MF	3500	3500	6000	≤19	0.75	3.9	4.0	2.0	8.8	64	46	60	60	120
PH431KX ($M_{2acc,max}$ = 168 Nm)																
4.000	4/1	PH431_0040KX401_0010 MF	2500	2000	4000	≤24	2.9	7.9	5.5	3.5	11	72	77	96	96	208
5.000	5/1	PH431_0050KX401_0010 MF	2500	2000	4000	≤24	2.7	7.9	5.0	3.0	15	72	85	120	120	260
7.000	7/1	PH431_0070KX401_0010 MF	2500	2000	4000	≤24	2.5	7.9	4.5	2.5	19	72	85	160	168	320
8.000	8/1	PH431_0040KX401_0020 MF	2500	2500	5000	≤24	1.7	7.9	5.5	3.5	11	68	77	96	96	208
10.00	10/1	PH431_0050KX401_0020 MF	2500	2500	5000	≤24	1.7	7.9	5.0	3.0	15	68	90	120	120	260
12.00	12/1	PH431_0040KX401_0030 MF	3000	3000	5500	≤24	1.5	7.9	5.5	3.5	11	66	77	96	96	208
14.00	14/1	PH431_0070KX401_0020 MF	2500	2500	5000	≤24	1.7	7.9	4.5	2.5	19	68	90	160	168	320
15.00	15/1	PH431_0050KX401_0030 MF	3000	3000	5500	≤24	1.5	7.9	5.0	3.0	15	66	90	120	120	260
20.00	20/1	PH431_0100KX401_0020 MF	2500	2500	5000	≤24	1.6	7.9	4.0	2.0	18	68	75	115	115	230
21.00	21/1	PH431_0070KX401_0030 MF	3000	3000	5500	≤24	1.5	7.9	4.5	2.5	19	66	90	160	168	320
30.00	30/1	PH431_0100KX401_0030 MF	3000	3000	5500	≤24	1.4	7.9	4.0	2.0	18	66	75	115	115	230
PH432KX ($M_{2acc,max}$ = 174 Nm)																
32.00	32/1	PH432_0160KX301_0020 MF	3500	3000	5500	≤19	0.84	6.5	3.5	1.5	25	66	90	160	173	312
35.00	35/1	PH432_0350KX301_0010 MF	3000	2500	4500	≤19	1.1	6.5	3.5	1.5	30	70	110	160	174	320
40.00	40/1	PH432_0200KX301_0020 MF	3500	3000	5500	≤19	0.82	6.5	3.5	1.5	27	66	95	150	150	299
48.00	48/1	PH432_0160KX301_0030 MF	3500	3500	6000	≤19	0.76	6.5	3.5	1.5	25	64	90	160	173	312
50.00	50/1	PH432_0250KX301_0020 MF	3500	3000	5500	≤19	0.82	6.5	3.5	1.5	29	66	100	161	174	322
56.00	56/1	PH432_0280KX301_0020 MF	3500	3000	5500	≤19	0.83	6.5	3.5	1.5	29	66	95	160	173	312
60.00	60/1	PH432_0200KX301_0030 MF	3500	3500	6000	≤19	0.76	6.5	3.5	1.5	27	64	95	150	150	299
70.00	70/1	PH432_0350KX301_0020 MF	3500	3000	5500	≤19	0.82	6.5	3.5	1.5	30	66	110	160	174	320
75.00	75/1	PH432_0250KX301_0030 MF	3500	3500	6000	≤19	0.75	6.5	3.5	1.5	29	64	100	161	174	322
80.00	80/1	PH432_0400KX301_0020 MF	3500	3000	5500	≤19	0.83	6.5	3.5	1.5	29	66	110	155	169	310

i	i_{exakt}	Type	n_{1MAXDB} EL1,2,5,6 [rpm]	n_{1MAXDB} EL3,4 [rpm]	n_{1MAXZB} [rpm]	d_{MW} [mm]	J_1 [kgcm²]	m [kg]	$\Delta\varphi_2$ [arcmin]	$\Delta\varphi_{2red}$ [arcmin]	C_2 [Nm/ arcmin]	L_{pA} [dB(A)]	M_{2N} [Nm]	M_{2acc} [Nm]	M_{2accHT} [Nm]	M_{2NOT} [Nm]
PH432KX ($M_{2acc,max}$ = 174 Nm)																
84.00	84/1	PH432_0280KX301_0030 MF	3500	3500	6000	≤19	0.76	6.5	3.5	1.5	29	64	95	160	173	312
100.0	100/1	PH432_0500KX301_0020 MF	3500	3000	5500	≤19	0.82	6.5	3.0	1.0	30	66	120	159	174	318
105.0	105/1	PH432_0350KX301_0030 MF	3500	3500	6000	≤19	0.75	6.5	3.5	1.5	30	64	110	160	174	320
120.0	120/1	PH432_0400KX301_0030 MF	3500	3500	6000	≤19	0.76	6.5	3.5	1.5	29	64	110	155	169	310
140.0	140/1	PH432_0700KX301_0020 MF	3500	3000	5500	≤19	0.81	6.5	3.0	1.0	27	66	120	158	164	316
150.0	150/1	PH432_0500KX301_0030 MF	3500	3500	6000	≤19	0.75	6.5	3.0	1.0	30	64	120	159	174	318
200.0	200/1	PH432_1000KX301_0020 MF	3500	3000	5500	≤19	0.81	6.5	3.0	1.0	20	66	85	110	110	220
210.0	210/1	PH432_0700KX301_0030 MF	3500	3500	6000	≤19	0.75	6.5	3.0	1.0	27	64	120	158	164	316
300.0	300/1	PH432_1000KX301_0030 MF	3500	3500	6000	≤19	0.75	6.5	3.0	1.0	20	64	85	110	110	220
PH531KX ($M_{2acc,max}$ = 387 Nm)																
4.000	4/1	PH531_0040KX501_0010 MF	2500	2000	3500	≤32	9.1	14	5.5	3.5	28	74	192	242	242	521
5.000	5/1	PH531_0050KX501_0010 MF	2500	2000	3500	≤32	8.5	14	5.0	3.0	37	74	210	302	302	651
7.000	7/1	PH531_0070KX501_0010 MF	2500	2000	3500	≤32	8.0	14	4.5	2.5	46	74	210	370	387	705
8.000	8/1	PH531_0040KX501_0020 MF	2500	2500	4500	≤32	5.7	14	5.5	3.5	28	70	192	242	242	521
10.00	10/1	PH531_0050KX501_0020 MF	2500	2500	4500	≤32	5.5	14	5.0	3.0	37	70	220	302	302	651
12.00	12/1	PH531_0040KX501_0030 MF	3000	3000	5000	≤32	5.0	14	5.5	3.5	28	68	192	242	242	521
14.00	14/1	PH531_0070KX501_0020 MF	2500	2500	4500	≤32	5.4	14	4.5	2.5	46	70	210	370	387	705
15.00	15/1	PH531_0050KX501_0030 MF	3000	3000	5000	≤32	4.9	14	5.0	3.0	37	68	220	302	302	651
20.00	20/1	PH531_0100KX501_0020 MF	2500	2500	4500	≤32	5.3	14	4.0	2.0	44	70	180	288	288	575
21.00	21/1	PH531_0070KX501_0030 MF	3000	3000	5000	≤32	4.8	14	4.5	2.5	46	68	210	370	387	705
30.00	30/1	PH531_0100KX501_0030 MF	3000	3000	5000	≤32	4.8	14	4.0	2.0	44	68	180	288	288	575
PH532KX ($M_{2acc,max}$ = 400 Nm)																
32.00	32/1	PH532_0160KX401_0020 MF	2500	2500	5000	≤24	1.7	12	3.5	1.5	63	68	230	355	355	696
35.00	35/1	PH532_0350KX401_0010 MF	2500	2000	4000	≤24	2.6	12	3.5	1.5	78	72	290	385	400	705
40.00	40/1	PH532_0200KX401_0020 MF	2500	2500	5000	≤24	1.7	12	3.5	1.5	71	68	250	370	387	705
48.00	48/1	PH532_0160KX401_0030 MF	3000	3000	5500	≤24	1.5	12	3.5	1.5	63	66	230	355	355	696
50.00	50/1	PH532_0250KX401_0020 MF	2500	2500	5000	≤24	1.7	12	3.5	1.5	75	68	260	385	400	705
56.00	56/1	PH532_0280KX401_0020 MF	2500	2500	5000	≤24	1.7	12	3.5	1.5	72	68	240	355	387	696
60.00	60/1	PH532_0200KX401_0030 MF	3000	3000	5500	≤24	1.5	12	3.5	1.5	71	66	250	370	387	705
70.00	70/1	PH532_0350KX401_0020 MF	2500	2500	5000	≤24	1.7	12	3.5	1.5	78	68	290	385	400	705
75.00	75/1	PH532_0250KX401_0030 MF	3000	3000	5500	≤24	1.5	12	3.5	1.5	75	66	260	385	400	705
80.00	80/1	PH532_0400KX401_0020 MF	2500	2500	5000	≤24	1.7	12	3.5	1.5	71	68	260	355	356	696
84.00	84/1	PH532_0280KX401_0030 MF	3000	3000	5500	≤24	1.5	12	3.5	1.5	72	66	240	355	387	696
100.0	100/1	PH532_0500KX401_0020 MF	2500	2500	5000	≤24	1.7	12	3.0	1.0	77	68	296	385	400	705
105.0	105/1	PH532_0350KX401_0030 MF	3000	3000	5500	≤24	1.5	12	3.5	1.5	78	66	290	385	400	705
120.0	120/1	PH532_0400KX401_0030 MF	3000	3000	5500	≤24	1.5	12	3.5	1.5	71	66	260	355	356	696
140.0	140/1	PH532_0700KX401_0020 MF	2500	2500	5000	≤24	1.6	12	3.0	1.0	69	68	284	370	387	705
150.0	150/1	PH532_0500KX401_0030 MF	3000	3000	5500	≤24	1.5	12	3.0	1.0	77	66	296	385	400	705
200.0	200/1	PH532_1000KX401_0020 MF	2500	2500	5000	≤24	1.6	12	3.0	1.0	52	68	221	288	288	575
210.0	210/1	PH532_0700KX401_0030 MF	3000	3000	5500	≤24	1.4	12	3.0	1.0	69	66	284	370	387	705
300.0	300/1	PH532_1000KX401_0030 MF	3000	3000	5500	≤24	1.4	12	3.0	1.0	52	66	221	288	288	575
PH731KX ($M_{2acc,max}$ = 840 Nm)																
4.000	4/1	PH731_0040KX701_0010 MF	1800	1600	3000	≤38	30	26	5.5	3.5	94	76	384	480	480	917
5.000	5/1	PH731_0050KX701_0010 MF	1800	1600	3000	≤38	28	26	5.0	3.0	111	76	440	600	600	1146
7.000	7/1	PH731_0070KX701_0010 MF	1800	1600	3000	≤38	26	26	4.5	2.5	122	76	440	840	840	1604
8.000	8/1	PH731_0040KX701_0020 MF	1800	1800	3500	≤38	16	26	5.5	3.5	94	72	384	480	480	1042
10.00	10/1	PH731_0050KX701_0020 MF	1800	1800	3500	≤38	15	26	5.0	3.0	111	72	440	600	600	1302
12.00	12/1	PH731_0040KX701_0030 MF	2100	2100	4000	≤38	13	26	5.5	3.5	94	70	384	480	480	1042
14.00	14/1	PH731_0070KX701_0020 MF	1800	1800	3500	≤38	15	26	4.5	2.5	122	72	440	840	840	1720
15.00	15/1	PH731_0050KX701_0030 MF	2100	2100	4000	≤38	13	26	5.0	3.0	111	70	440	600	600	1302
20.00	20/1	PH731_0100KX701_0020 MF	1800	1800	3500	≤38	15	26	4.0	2.0	110	72	350	575	575	1150
21.00	21/1	PH731_0070KX701_0030 MF	2100	2100	4000	≤38	13	26	4.5	2.5	122	70	440	840	840	1720
30.00	30/1	PH731_0100KX701_0030 MF	2100	2100	4000	≤38	13	26	4.0	2.0	110	70	350	575	575	1150
PH732KX ($M_{2acc,max}$ = 908 Nm)																
32.00	32/1	PH732_0160KX501_0020 MF	2500	2500	4500	≤32	5.6	22	3.5	1.5	152	70	450	740	740	1480
35.00	35/1	PH732_0350KX501_0010 MF	2500	2000	3500	≤32	8.2	22	3.5	1.5	172	74	540	866	908	1720
40.00	40/1	PH732_0200KX501_0020 MF	2500	2500	4500	≤32	5.5	22	3.5	1.5	157	70	460	805	845	1610
48.00	48/1	PH732_0160KX501_0030 MF	3000	3000	5000	≤32	4.9	22	3.5	1.5	152	68	450	740	740	1480
50.00	50/1	PH732_0250KX501_0020 MF	2500	2500	4500	≤32	5.5	22	3.5	1.5	166	70	500	866	908	1720
56.00	56/1	PH732_0280KX501_0020 MF	2500	2500	4500	≤32	5.5	22	3.5	1.5	176	70	540	770	880	1540
60.00	60/1	PH732_0200KX501_0030 MF	3000	3000	5000	≤32	4.9	22	3.5	1.5	157	68	460	805	845	1610
70.00	70/1	PH732_0350KX501_0020 MF	2500	2500	4500	≤32	5.4	22	3.5	1.5	172	70	540	866	908	1720
75.00	75/1	PH732_0250KX501_0030 MF	3000	3000	5000	≤32	4.9	22	3.5	1.5	166	68	500	866	908	1720

i	i_{exakt}	Type	n_{1MAXDB} EL1,2,5,6 [rpm]	n_{1MAXDB} EL3,4 [rpm]	n_{1MAXZB} [rpm]	d_{MW} [mm]	J_1 [kgcm²]	m [kg]	$\Delta\varphi_2$ [arcmin]	$\Delta\varphi_{2red}$ [arcmin]	C_2 [Nm/ arcmin]	L_{pA} [dB(A)]	M_{2N} [Nm]	M_{2acc} [Nm]	M_{2accHT} [Nm]	M_{2NOT} [Nm]
PH732KX ($M_{2acc,max}$ = 908 Nm)																
80.00	80/1	PH732_0400KX501_0020 MF	2500	2500	4500	≤32	5.5	22	3.5	1.5	174	70	540	770	770	1540
84.00	84/1	PH732_0280KX501_0030 MF	3000	3000	5000	≤32	4.9	22	3.5	1.5	176	68	540	770	880	1540
100.0	100/1	PH732_0500KX501_0020 MF	2500	2500	4500	≤32	5.4	22	3.0	1.0	171	70	600	830	834	1660
105.0	105/1	PH732_0350KX501_0030 MF	3000	3000	5000	≤32	4.9	22	3.5	1.5	172	68	540	866	908	1720
120.0	120/1	PH732_0400KX501_0030 MF	3000	3000	5000	≤32	4.9	22	3.5	1.5	174	68	540	770	770	1540
140.0	140/1	PH732_0700KX501_0020 MF	2500	2500	4500	≤32	5.4	22	3.0	1.0	152	70	600	809	847	1617
150.0	150/1	PH732_0500KX501_0030 MF	3000	3000	5000	≤32	4.9	22	3.0	1.0	171	68	600	830	834	1660
200.0	200/1	PH732_1000KX501_0020 MF	2500	2500	4500	≤32	5.3	22	3.0	1.0	121	70	423	550	550	1100
210.0	210/1	PH732_0700KX501_0030 MF	3000	3000	5000	≤32	4.8	22	3.0	1.0	152	68	600	809	847	1617
300.0	300/1	PH732_1000KX501_0030 MF	3000	3000	5000	≤32	4.8	22	3.0	1.0	121	68	423	550	550	1100
PH831KX ($M_{2acc,max}$ = 1200 Nm)																
4.000	4/1	PH831_0040KX701_0010 MF	1800	1600	3000	≤38	52	44	5.5	3.5	122	76	384	480	480	917
5.000	5/1	PH831_0050KX701_0010 MF	1800	1600	3000	≤38	41	44	5.0	3.0	170	76	480	600	600	1146
7.000	7/1	PH831_0070KX701_0010 MF	1800	1600	3000	≤38	34	44	4.5	2.5	232	76	672	840	840	1604
8.000	8/1	PH831_0040KX701_0020 MF	1800	1800	3500	≤38	21	44	5.5	3.5	122	72	384	480	480	1042
10.00	10/1	PH831_0050KX701_0020 MF	1800	1800	3500	≤38	19	44	5.0	3.0	170	72	480	600	600	1302
12.00	12/1	PH831_0040KX701_0030 MF	2100	2100	4000	≤38	15	44	5.5	3.5	122	70	384	480	480	1042
14.00	14/1	PH831_0070KX701_0020 MF	1800	1800	3500	≤38	17	44	4.5	2.5	232	72	672	840	840	1823
15.00	15/1	PH831_0050KX701_0030 MF	2100	2100	4000	≤38	14	44	5.0	3.0	170	70	480	600	600	1302
20.00	20/1	PH831_0100KX701_0020 MF	1800	1800	3500	≤38	16	44	4.0	2.0	253	72	850	1200	1200	2604
21.00	21/1	PH831_0070KX701_0030 MF	2100	2100	4000	≤38	13	44	4.5	2.5	232	70	672	840	840	1823
30.00	30/1	PH831_0100KX701_0030 MF	2100	2100	4000	≤38	13	44	4.0	2.0	253	70	850	1200	1200	2604
PH832KX ($M_{2acc,max}$ = 2300 Nm)																
32.00	32/1	PH832_0160KX701_0020 MF	1800	1800	3500	≤38	16	49	3.5	1.5	415	72	1100	1860	1860	4000
40.00	40/1	PH832_0200KX701_0020 MF	1800	1800	3500	≤38	15	49	3.5	1.5	462	72	1250	2100	2300	4200
48.00	48/1	PH832_0160KX701_0030 MF	2100	2100	4000	≤38	13	49	3.5	1.5	415	70	1100	1860	1860	4000
50.00	50/1	PH832_0250KX701_0020 MF	1800	1800	3500	≤38	15	49	3.5	1.5	479	72	1300	2100	2300	4200
56.00	56/1	PH832_0280KX701_0020 MF	1800	1800	3500	≤38	16	49	3.5	1.5	451	72	1100	2000	2000	4000
60.00	60/1	PH832_0200KX701_0030 MF	2100	2100	4000	≤38	13	49	3.5	1.5	462	70	1250	2100	2300	4200
70.00	70/1	PH832_0350KX701_0020 MF	1800	1800	3500	≤38	15	49	3.5	1.5	489	72	1450	2100	2300	4200
75.00	75/1	PH832_0250KX701_0030 MF	2100	2100	4000	≤38	13	49	3.5	1.5	479	70	1300	2100	2300	4200
80.00	80/1	PH832_0400KX701_0020 MF	1800	1800	3500	≤38	16	49	3.5	1.5	440	72	1100	1920	1936	3840
84.00	84/1	PH832_0280KX701_0030 MF	2100	2100	4000	≤38	13	49	3.5	1.5	451	70	1100	2000	2000	4000
100.0	100/1	PH832_0500KX701_0020 MF	1800	1800	3500	≤38	15	49	3.0	1.0	481	72	1557	2100	2300	4200
105.0	105/1	PH832_0350KX701_0030 MF	2100	2100	4000	≤38	13	49	3.5	1.5	489	70	1450	2100	2300	4200
120.0	120/1	PH832_0400KX701_0030 MF	2100	2100	4000	≤38	13	49	3.5	1.5	440	70	1100	1920	1936	3840
140.0	140/1	PH832_0700KX701_0020 MF	1800	1800	3500	≤38	15	49	3.0	1.0	421	72	1422	1848	1936	3696
150.0	150/1	PH832_0500KX701_0030 MF	2100	2100	4000	≤38	13	49	3.0	1.0	481	70	1557	2100	2300	4200
200.0	200/1	PH832_1000KX701_0020 MF	1800	1800	3500	≤38	15	49	3.0	1.0	332	72	1062	1380	1380	2760
210.0	210/1	PH832_0700KX701_0030 MF	2100	2100	4000	≤38	13	49	3.0	1.0	421	70	1422	1848	1936	3696
300.0	300/1	PH832_1000KX701_0030 MF	2100	2100	4000	≤38	12	49	3.0	1.0	332	70	1062	1380	1380	2760

12.3 Dimensional drawings

In this chapter, you can find the dimensions of the gear units as well as example dimensions of the mountable motor adapters.

Dimensions can exceed the specifications of ISO 2768-mK due to casting tolerances or accumulation of individual tolerances.

We reserve the right to make dimensional changes due to ongoing technical development.

You can download 3D models of our standard drives at http://configurator.stoeber.de.

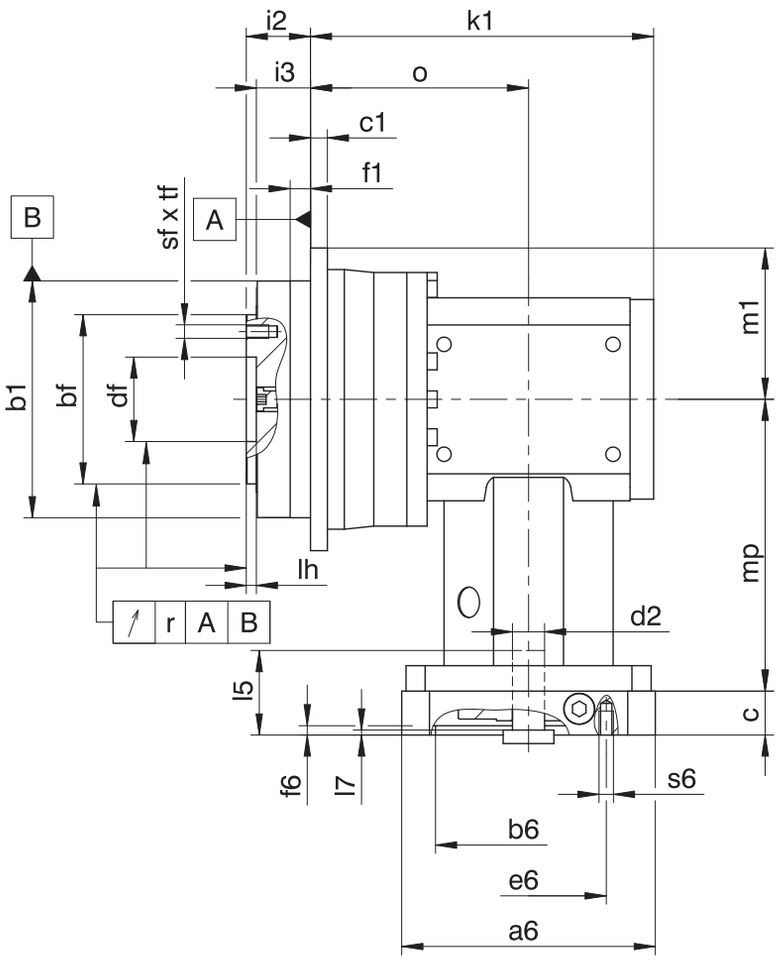

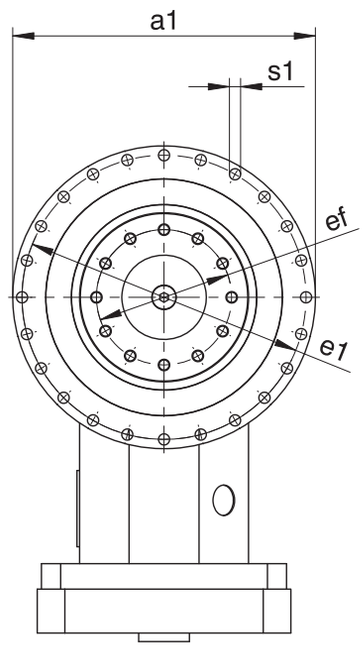

PH3 | PH4

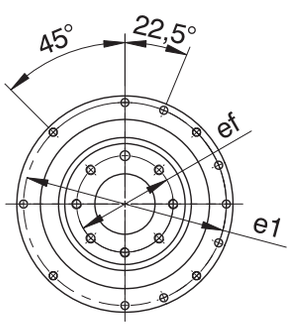

PH5

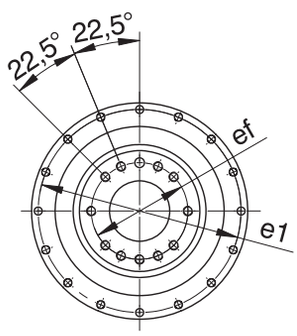

PH7/PH8

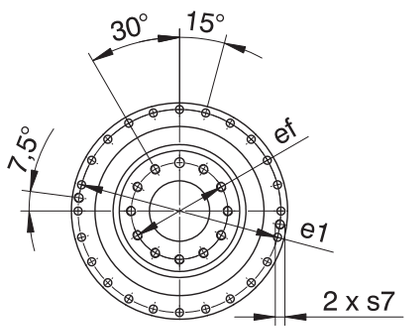

Dimensions of gear units

Type	Øa1	Øb1	Øbf	c1	Ødf	Øe1	Øef	f1	i2	i3	k1	lh	m1	o	p	r	Øs1	s7	sf	Øsf1	tf	tf1
PH331_KX301_	86_{h7}	64_{h7}	40_{h7}	4	20.0^{H6}	79	32	7	19.5	16.5	113.5	4	43.0	73.5	0.02	0.020	4.5	–	M5	5^{H7}	7	3
PH332_KX301_	86_{h7}	64_{h7}	40_{h7}	4	20.0^{H6}	79	32	7	19.5	16.5	147.0	4	43.0	107.0	0.02	0.020	4.5	–	M5	5^{H7}	7	3
PH431_KX401_	118_{h7}	90_{h7}	63_{h7}	7	31.5^{H6}	109	50	10	30.0	24.0	139.0	6	59.0	89.0	0.02	0.020	5.5	–	M6	6^{H7}	11	7
PH432_KX301_	118_{h7}	90_{h7}	63_{h7}	7	31.5^{H6}	109	50	10	30.0	24.0	161.5	6	59.0	121.5	0.02	0.020	5.5	–	M6	6^{H7}	11	7
PH531_KX501_	145_{h7}	110_{h7}	80_{h7}	8	40.0^{H6}	135	63	12	29.0	23.0	168.0	6	72.5	109.0	0.02	0.020	5.5	–	M6	6^{H7}	11	7
PH532_KX401_	145_{h7}	110_{h7}	80_{h7}	8	40.0^{H6}	135	63	12	29.0	23.0	187.5	6	72.5	137.5	0.02	0.020	5.5	–	M6	6^{H7}	11	7
PH731_KX701_	179_{h7}	140_{h7}	100_{h7}	10	50.0^{H6}	168	80	12	38.0	32.0	203.0	6	89.5	129.0	0.02	0.025	6.6	–	M8	8^{H7}	14	7
PH732_KX501_	179_{h7}	140_{h7}	100_{h7}	10	50.0^{H6}	168	80	12	38.0	32.0	226.0	6	89.5	167.0	0.02	0.025	6.6	–	M8	8^{H7}	14	7
PH831_KX701_	247_{h7}	200_{h7}	160_{h7}	12	80.0^{H6}	233	125	15	50.0	42.0	235.5	8	123.5	161.5	0.02	0.030	9.0	M10	M10	10^{H7}	18	10
PH832_KX701_	247_{h7}	200_{h7}	160_{h7}	12	80.0^{H6}	233	125	15	50.0	42.0	293.0	8	123.5	219.0	0.02	0.030	9.0	M10	M10	10^{H7}	18	10

Example dimensions for the motor connection

Type	Øb6	Øe6	Ød2max	l5	□a6	c	f6	l7	s6
PH_KX301_MF	60^{H7}	75	19	40	75	18	3.5	5.5	M5
PH_KX401_MF	95^{H7}	115	24	42	100	21	4.0	4.5	M8
PH_KX501_MF	110^{H7}	130	32	53	120	24	4.0	5.0	M8
PH_KX701_MF	130^{H7}	165	38	64	150	26	5.5	8.0	M10

In the table above, you will find example dimensions for the motor connection for the MF motor adapter. **Note that when dimension c is lengthened (depending on the motor used), dimensions c6, l5 and lg are also lengthened accordingly.**

You will find additional motor connection dimensions for the MF motor adapter in our STOBER Configurator at http://configurator.stoeber.de. Here, you can directly download a 3D model of your drive.

12.4 Type designation

12.4.1 Type designation PH3KX_ – PH8KX_

In this chapter, you can find an explanation of the type designation with the associated options.

Additional ordering information not included in the type designation can be found at the end of the chapter.

Example code

PH	**7**	**3**	**1**	**S**	**F**	**S**	**S**	**0050**	**KX701VF**	**0010**	**MF**

Explanation

Code	Designation	Design
PH	Type	Planetary gear unit
7	Size	7 (example)
3	Generation	Generation 3
1 2	Stages	Single-stage Two-stage
S	Housing	Standard
F	Shaft	Flange shaft
S V	Bearing	Standard bearing Reinforced bearing (PH3 – PH5)
S R	Backlash	Standard Reduced
0050	Transmission ratio of output (i x 10)	i = 5 (example)
KX701 **VF**	Input	KX7 right-angle geared motor (example)
0010	Transmission ratio of input (i x 10)	i = 1 (example)
MF	Motor adapter	Motor adapter with FlexiAdapt coupling

In order to complete the type designation, also specify:

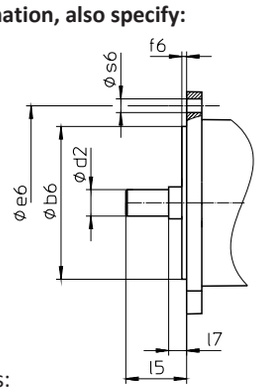

- Motor type or motor dimensions:

  To choose a suitable motor connection, use the STOBER Configurator at http://configurator.stoeber.de and choose your motor or the dimensions of the motor connection.
- Mounting position, see the chapter [▸ 12.5.4]
- Position of locking screw access, see the chapter [▸ 12.5.6]
- Radial shaft seal rings at the output made of NBR or FKM (option), see the chapter [▸ 12.6.4]
- Reverse operation of the output shaft from ±20° to ±90° and horizontal installation, note the chapter [▸ 12.6.5]
- Socket wrench insert for mounting the motor on the gear unit using the MF motor adapter (optional)

12.4.2 Nameplate

An example gear unit nameplate is explained in the figure below.

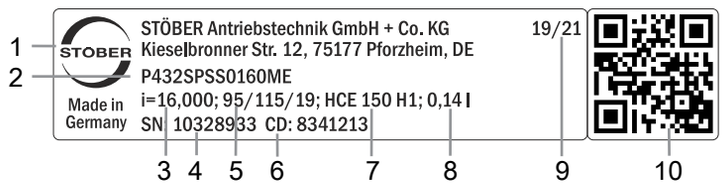

Code	Designation
1	Name of manufacturer
2	Type designation
3	Gear ratio of the gear unit
4	Serial number of the gear unit
5	Dimensions of the motor adapter (diameter of pilot/bolt circle/motor shaft)
6	Customer-specific data
7	Lubricant specification
8	Lubricant fill volume
9	Date of manufacture (year/calendar week)
10	QR code (link to product information)

12.4.2.1 Supporting documents

You can view or download supporting documents for the product by reading off the serial number on the nameplate of the product and entering it at the following address online:
https://id.stober.com

Alternatively, you can use a suitable mobile device to scan in the QR code on the nameplate of the product in order to be linked to the supporting documents.

12.5 Product description

12.5.1 Input options

MF motor adapter for attaching synchronous servo motors

http://www.stoeber.de/en/PHKXMF

EZ synchronous servo motor

http://www.stoeber.de/en/PHKXEZ

12.5.2 Motor adapter with FlexiAdapt coupling (MF)

In this chapter, you will find a description of the FlexiAdapt coupling.

Properties:

- Fast and easy motor attachment
- With integrated thermal length compensation, compensates for linear expansion of the motor shaft
- Motor shaft decoupled from axial forces
- Large motor shaft diameter range
- Error-free, thanks to exact centering of the motor

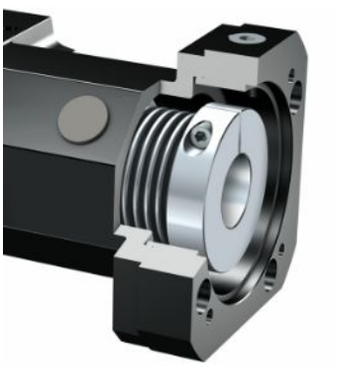

Fig. 1: FlexiAdapt coupling

12.5.3 Installation conditions

The torque and force values listed in this catalog are valid under the following conditions:

- When the flange shaft and gear housing are fastened on the machine side using screws of strength class 12.9
- When the gear housings are adjusted at pilot øb1. The machine-side fit must be H7.
- When the flange shaft is adjusted using the connecting element at pilot øbf or ødf

12.5.4 Mounting positions

The following table shows the standard mounting positions.

The numbers identify the gear unit sides. The mounting position is defined by the gear side facing downwards.

EL1	EL2	EL3
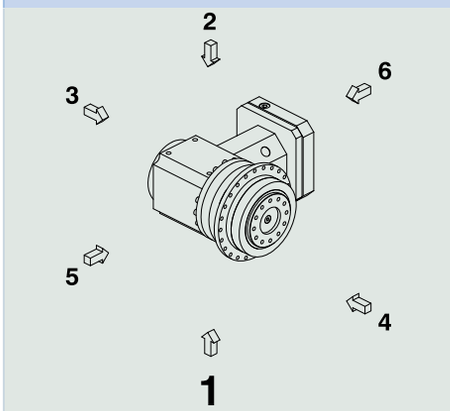	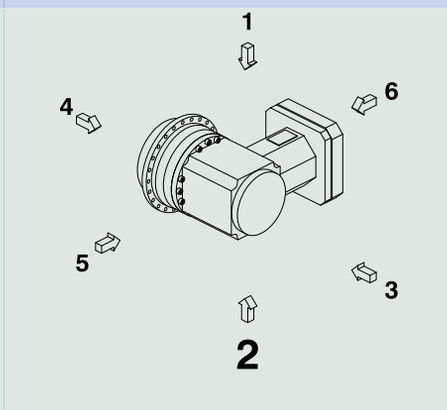	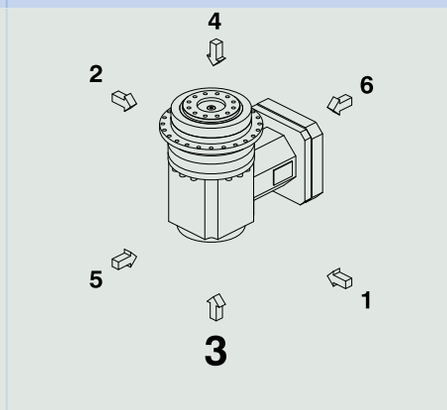
EL4	**EL5**	**EL6**
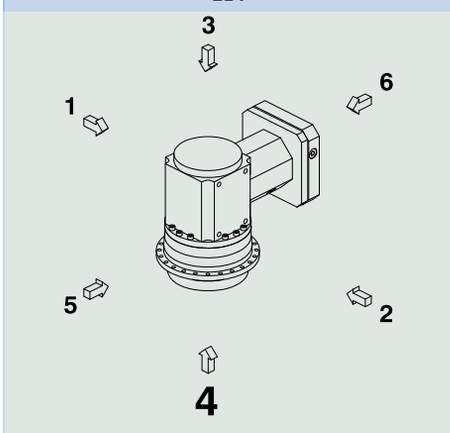	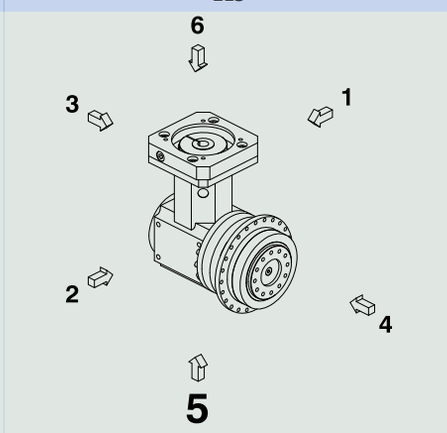	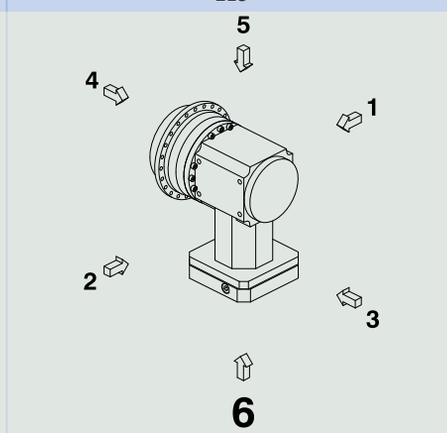

Since the lubricant filling volume of the gear unit depends on the mounting position, the mounting position must be specified when ordering.

12.5.5 Lubricants

STOBER fills the gear units with the amount and type of lubricant specified on the nameplate. The filling volume and the structure of the gear units depend on the mounting position.

Only install the gear units in the intended mounting position! Reposition the gear units only after consulting STOBER. Otherwise, STOBER assumes no liability for the gear units.

You will receive lubricants for use in the food industry upon request.

12.5.6 Position of locking screw access

Mounting position EL1 Locking screw in 270° position (standard)	Mounting position EL4 Locking screw in 270° position (standard)
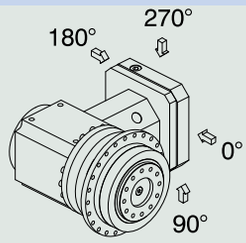	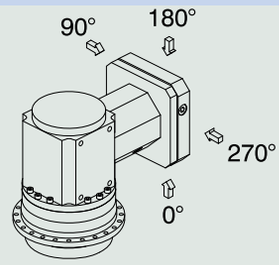

Indicate variations for your gear unit in the order.

Note that the access hole for the locking screw also rotates when the gear unit is rotated to another mounting position.

12.5.7 Other product features

Feature	Value
Max. permitted gear unit temperature (on the surface of the gear unit)	≤ 90 °C
Paint	Black RAL 9005
Explosion-proof design in accordance with (ATEX) Directive 2014/34/EU (optional)	Available, see Document ID 441677_en
Efficiency: η_{get} two-stage η_{get} three-stage	 95% 92%
Protection class: [1]	IP65

12.5.8 Direction of rotation

PH3KX_ – PH5KX_	PH7KX_ – PH8KX_
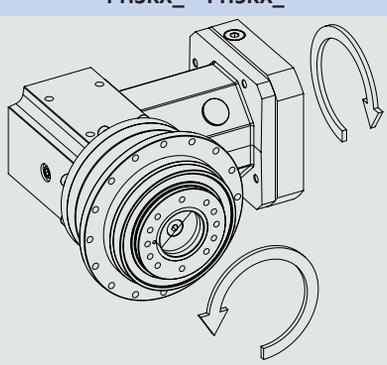	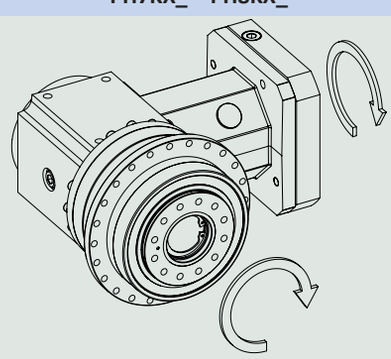

The pictures show mounting position EL1.

12.6 Project configuration

Project your drives using our SERVOsoft designing software. Download SERVOsoft for free at https://www.stoeber.de/en/ServoSoft.

Observe the limit conditions in this chapter to ensure a safe design for your drives.

An explanation of the formula symbols can be found in the chapter [▶ 18.1].

[1] Observe the protection class of all the components.

12.6.1 Drive selection

The formula symbols for values actually present in the application are marked with *.

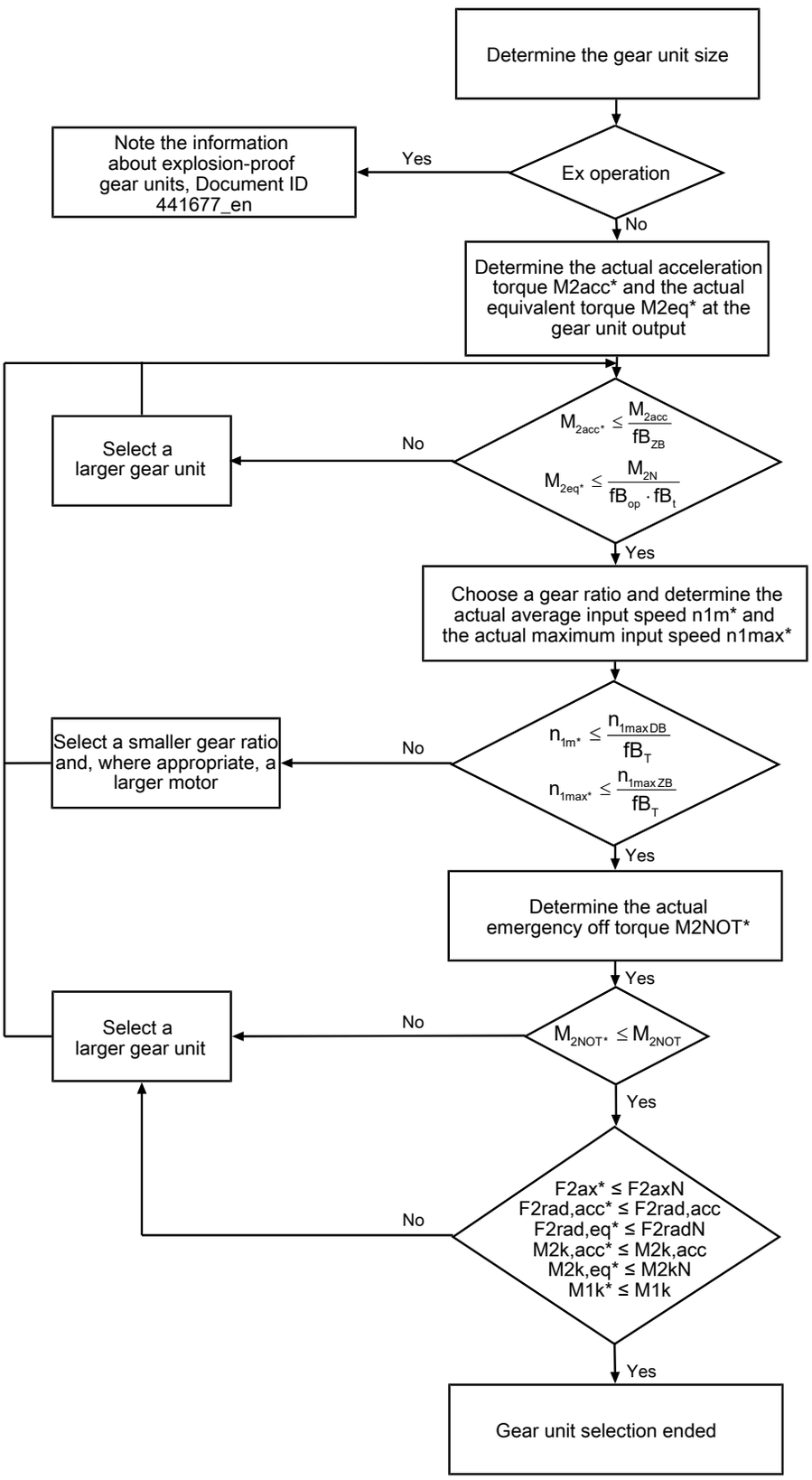

Calculate the forces and tilting torques in the chapter Permitted shaft loads.

Refer to the selection tables for the values for i, n_{1maxDB}, n_{1maxZB}, M_{2acc} (M_{2accHT} for reduced backlash), M_{2NOT} and M_{2N}.

The values for fB_T, fB_{op}, fB_t and fB_{ZB} can be found in the corresponding tables in this chapter.

Example of cyclic operation

The following calculations are based on a representation of the power taken from the output based in accordance with the following example:

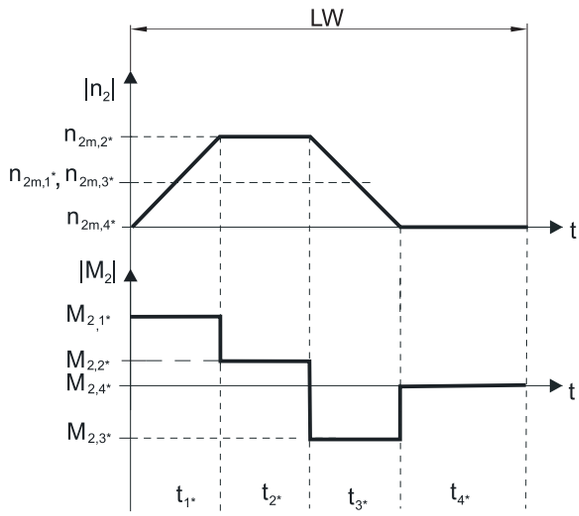

Calculation of the actual maximum acceleration torque

$$M_{2acc*} = J_{tot} \cdot \frac{\Delta n_2}{9.55 \cdot \Delta t} + M_{L*}$$

Calculation of the actual average input speed

$$n_{1m*} = n_{2m*} \cdot i$$

$$n_{2m*} = \frac{|n_{2m,1*}| \cdot t_{1*} + \ldots + |n_{2m,n*}| \cdot t_{n*}}{t_{1*} + \ldots + t_{n*}}$$

If $t_{1*} + \ldots + t_{3*} \geq 6$ min, calculate n_{2m*} without the rest phase t_{4*}.

The values for the ratio i can be found in the selection tables.

Calculation of the actual emergency-off torque

$$M_{2NOT*} = J_{tot} \cdot \frac{\Delta n_2}{9.55 \cdot \Delta t} + M_{L*}$$

Calculation of the actual equivalent torque

$$M_{2eq*} = \sqrt[3]{\frac{|n_{2m,1*}| \cdot t_{1*} \cdot |M_{2,1*}{}^3| + \ldots + |n_{2m,n*}| \cdot t_{n*} \cdot |M_{2,n*}{}^3|}{|n_{2m,1*}| \cdot t_{1*} + \ldots + |n_{2m,n*}| \cdot t_{n*}}}$$

Operating factors

Operating mode	fB_{op}
Uniform continuous operation	1.00
Cyclic operation	1.25
Reversing load cyclic operation	1.40

Run time	fB_t
Daily runtime ≤ 8 h	1.00
Daily runtime ≤ 16 h	1.15
Daily runtime ≤ 24 h	1.20

Cyclic operation	fB_{ZB}
≤ 1000 load changes/hour (LW/h)	1.00
> 1000 load changes/hour (LW/h)	1.15

Temperature		fB_T
Motor cooling	**Surrounding temperature**	
Motor with forced ventilation	≤ 20 °C	0.9
	≤ 30 °C	1.0
	≤ 40 °C	1.15
Motor with convection cooling	≤ 20 °C	1.0
	≤ 30 °C	1.1
	≤ 40 °C	1.25

Notes

- The maximum permitted gear unit temperature of ≤ 90 °C must not be exceeded. Doing so may result in damage to the gear unit.

12.6.2 Permitted shaft loads for the output shaft

The values specified in the tables apply to the permitted shaft loads:

- For shaft dimensions in accordance with the catalog
- For output speeds n_{2m*} ≤ 100 rpm ($F^{2axN} = F_{2ax100}$; $F_{2radN} = F_{2rad100}$; $M_{2kN} = M_{2k100}$)
- Only if radial forces on the gear unit are stabilized by its pilots (housing, flange shaft)

Permitted shaft loads for standard bearing S

Type	z_2 [mm]	F_{2ax100} [N]	$F_{2rad100}$ [N]	$F_{2rad,acc}$ [N]	M_{2k100} [Nm]	$M_{2k,acc}$ [Nm]	C_{2k} [Nm/arcmin]
PH3	62.5	1650	1613	1613	101	101	75
PH4	83.0	2150	3095	3571	257	296	192
PH5	97.0	4150	4536	4897	440	475	429
PH7	86.0	6150	17045	17045	1466	1466	500
PH8	125.5	10050	27778	27778	3486	3486	1550
PH9	155.0	33000	48387	70968	7500	11000	7500
PH10	171.0	50000	51462	73099	8800	12500	9500

Permitted shaft loads for reinforced bearing V

Type	z_2 [mm]	F_{2ax100} [N]	$F_{2rad100}$ [N]	$F_{2rad,acc}$ [N]	M_{2k100} [Nm]	$M_{2k,acc}$ [Nm]	C_{2k} [Nm/arcmin]
PH3	66.5	2200	2250	2250	150	150	80
PH4	88.5	2900	4000	4000	354	354	217
PH5	104.0	5000	5500	5500	572	572	478

For other output speeds, download diagrams at http://configurator.stoeber.de.

The following applies to output speeds n_{2m*} > 100 rpm:

$$F_{2axN} = \frac{F_{2ax100}}{\sqrt[3]{\frac{n_{2m*}}{100\ \text{rpm}}}} \qquad F_{2radN} = \frac{F_{2rad100}}{\sqrt[3]{\frac{n_{2m*}}{100\ \text{rpm}}}} \qquad M_{2kN} = \frac{M_{2k100}}{\sqrt[3]{\frac{n_{2m*}}{100\ \text{rpm}}}}$$

The values for F_{2ax100}, $F_{2rad100}$ and M_{2k100} can be found in the table "Permitted shaft loads" in this chapter.

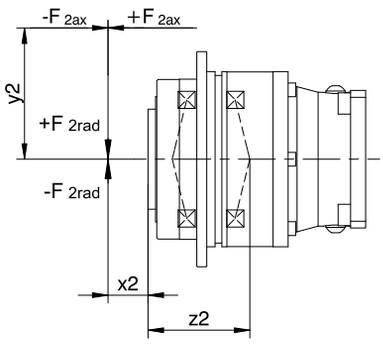

Fig. 2: Force application points

You can determine the permitted radial forces from the permitted breakdown torque M_{2kN} and $M_{2k,acc}$. The actual radial forces may not exceed the permitted radial forces. The permitted radial forces pertain to the shaft end (x2 = 0).

$$M_{2k,acc*} = \frac{2 \cdot F_{2ax*} \cdot y_2 + F_{2rad,acc*} \cdot (x_2 + z_2)}{1000} \leq M_{2k,acc}$$

For applications with multiple axial and/or radial forces, you must add the forces as vectors.

In the event of EMERGENCY OFF operation (max. 1000 load changes), you can multiply the permitted forces and torques for F_{2ax100}, $F_{2rad100}$ and M_{2k100} by a factor of two.

Also note the calculation for equivalent values:

$$M_{2k,eq*} = \sqrt[3]{\frac{|n_{2m,1*}| \cdot t_{1*} \cdot |M_{2k,acc,1*}{}^3| + \ldots + |n_{2m,n*}| \cdot t_{n*} \cdot |M_{2k,acc,n*}{}^3|}{|n_{2m,1*}| \cdot t_{1*} + \ldots + |n_{2m,n*}| \cdot t_{n*}}} \leq M_{2kN}$$

$$F_{2rad,eq*} = \sqrt[3]{\frac{|n_{2m,1*}| \cdot t_{1*} \cdot |F_{2rad,acc,1*}{}^3| + \ldots + |n_{2m,n*}| \cdot t_{n*} \cdot |F_{2rad,acc,n*}{}^3|}{|n_{2m,1*}| \cdot t_{1*} + \ldots + |n_{2m,n*}| \cdot t_{n*}}} \leq F_{2radN}$$

$$F_{2ax,eq*} \leq F_{2axN}$$

The following apply to the bearing service life L_{10h} ($ED_{10} \leq 40\%$):

$L_{10h} > 10000$ h with $1 < M_{2kN}/M_{2k*} < 1.25$

$L_{10h} > 20000$ h with $1.25 < M_{2kN}/M_{2k*} < 1.5$

$L_{10h} > 30000$ h with $1.5 < M_{2kN}/M_{2k*}$

For different duty cycles:

$$L_{10h} > L_{10h(ED_{10}=40\%)} \cdot \frac{40\%}{ED_{10}}$$

12.6.3 Permitted breakdown torques at the gear unit input

For a horizontal mounting position of the motor, verify that the permitted breakdown torque at the gear unit input is not exceeded before installation on a STOBER gear unit. You can find information for how to do that in this chapter.

Calculate the actual breakdown torque as follows:

$M_{1k*} = F_{1k*} \bullet l_{sp} \leq M_{1k}$

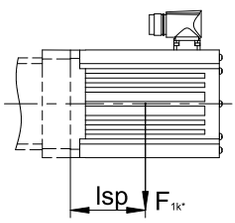

Type	M_{1k} [Nm]
KX301_MF	12
KX401_MF	24
KX501_MF	50
KX701_MF	100

12.6.4 Recommendation for radial shaft seal rings

For a duty cycle > 60% and higher surrounding temperatures, we recommend radial shaft seal rings made of FKM at the output.

Properties:

- Excellent temperature resistance
- High chemical stability
- Very good resistance to aging
- Excellent resistance in oils and greases
- For use in the food, beverage and pharmaceutical industries

Leak-proofness

Our gear units are equipped with high-quality radial shaft seal rings and checked for leaks. However, a leak cannot be fully ruled out over the length of use of a gear unit. If you use a gear unit with goods incompatible with the lubricant, you must take measures to prevent direct contact with the gear unit lubricant in case of a leak.

12.6.5 Reverse operation

To ensure lubrication for circulating gearing parts during cyclic reverse operation from ± 20° to ± 90° at the output, pay careful attention to the position of the output shaft for the horizontal mounting of the gear unit, as shown in the diagrams below.

The images show the center position of reverse operation.

Cyclic reverse operation ≤ ± 20° on request.

Size 3 – 10

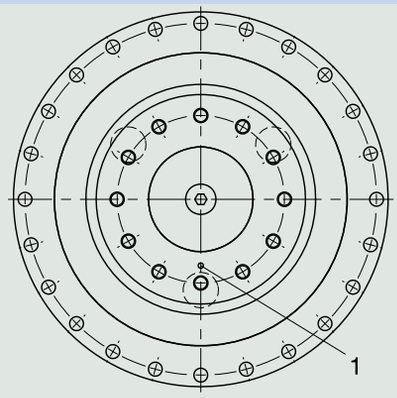

1 Position of the mark: bottom

Please note that the hole pattern may be different, depending on the size of the planetary gear unit.

12.7 Additional documentation

Additional documentation related to the product can be found at
http://www.stoeber.de/en/downloads/

Enter the ID of the documentation in the Search... field.

Documentation	ID
Operating manual for KL/KS/PHK/PHKX/PHQK/PK/PKX right-angle servo gear units and right-angle servo geared motors	443150_en
Operating manual for explosion-proof KL/KS/PHK/PHKX/PHQK/PK/PKX right-angle gear units	443005_en
Information explosion-proof gear units	441677_en

13 PHK right-angle planetary gear units

Table of contents

13.1 Overview ... 266

13.2 Selection tables ... 267

13.3 Dimensional drawings ... 274

13.4 Type designation ... 276

- 13.4.1 Type designation PH5K_ – PH8K_ ... 276
- 13.4.2 Type designation PH9K_ – PH10K_ ... 277
- 13.4.3 Nameplate ... 278

13.5 Product description ... 278

- 13.5.1 Input options ... 278
- 13.5.2 Motor adapter with EasyAdapt coupling (ME) ... 279
- 13.5.3 Square motor adapter with backlash-free plug-in coupling (MQ) ... 279
- 13.5.4 Installation conditions ... 279
- 13.5.5 Mounting positions ... 280
- 13.5.6 Lubricants ... 281
- 13.5.7 Position of locking screw access ... 281
- 13.5.8 Other product features ... 282
- 13.5.9 Direction of rotation ... 282

13.6 Project configuration ... 282

- 13.6.1 Drive selection ... 283
- 13.6.2 Permitted shaft loads for the output shaft ... 285
- 13.6.3 Permitted breakdown torques at the gear unit input ... 287
- 13.6.4 Recommendation for radial shaft seal rings ... 287
- 13.6.5 Reverse operation ... 288

13.7 Additional documentation ... 288

13

PHK right-angle planetary gear units

13.1 Overview

High-performance precision right-angle planetary gear units

Features

Power density	★★★★☆
Backlash	★★★★★
Price category	€€€€
Shaft load	★★★★★
Smooth operation	★★★☆☆
Torsional stiffness	★★★★☆
Mass moment of inertia	★★★★☆
Helical gearing	✓
Maintenance-free	✓
Continuous operation without cooling	✓
Stiff output bearings due to pretension	✓
Reinforced output bearing (PH3 – PH5)	✓ (optional)
Easy and reliable attachment to any synchronous servo motor	✓

Key ★☆☆☆☆ good | ★★★★★ excellent
€ Economy | €€€€€ Premium

Technical data

i	16 – 561
M_{2acc}	355 – 7500 Nm
$\Delta\phi_2$	1.5 – 4.5 arcmin
η_{get}	92 – 93 %

13.2 Selection tables

The technical data specified in the selection tables applies to:

- Installation altitudes up to 1000 m above sea level
- Surrounding temperatures from 0 °C to 40 °C
- Without consideration for thermal limiting performance

You can find the mass moment of inertia J_1 for smaller motor shaft diameters and all other technical data at http://configurator.stoeber.de.

An explanation of the formula symbols can be found in the chapter [▸ 18.1].

i	i_{exakt}	Type	n_{1MAXDB} EL1,2 [rpm]	n_{1MAXDB} EL3,4,5,6 [rpm]	n_{1MAXZB} [rpm]	d_{MW} [mm]	J_1 [kgcm²]	m [kg]	C_2 [Nm/arcmin]	$\Delta\varphi_2$ [arcmin]	$\Delta\varphi_{2red}$ [arcmin]	M_{2N} [Nm]	M_{2acc} [Nm]	M_{2accHT} [Nm]	M_{2NOT} [Nm]
PH531K ($M_{2acc,max}$ = 400 Nm)															
16.00	16/1	PH531_0040K102_0040 ME10	3300	2800	5000	≤19	1.6	17	50	4.5	2.5	210	355	358	485
16.00	16/1	PH531_0040K102_0040 ME20	3300	2800	5000	≤24	3.5	18	51	4.5	2.5	210	355	358	485
20.00	20/1	PH531_0050K102_0040 ME10	3300	2800	5000	≤19	1.6	17	60	4.0	2.0	220	385	400	607
20.00	20/1	PH531_0050K102_0040 ME20	3300	2800	5000	≤24	3.5	18	61	4.0	2.0	220	385	400	607
27.84	7600/273	PH531_0050K102_0056 ME10	3300	2800	5000	≤19	1.3	17	61	4.0	2.0	220	385	400	705
27.84	7600/273	PH531_0050K102_0056 ME20	3300	2800	5000	≤24	3.2	18	61	4.0	2.0	220	385	400	705
30.00	30/1	PH531_0050K102_0060 ME10	3300	2800	5000	≤19	1.1	17	61	4.0	2.0	220	385	400	705
30.00	30/1	PH531_0050K102_0060 ME20	3300	2800	5000	≤24	3.0	18	61	4.0	2.0	220	385	400	705
33.22	299/9	PH531_0050K102_0066 ME10	3600	3300	5500	≤19	1.1	17	61	4.0	2.0	220	385	400	705
33.22	299/9	PH531_0050K102_0066 ME20	3600	3300	5500	≤24	3.0	18	61	4.0	2.0	220	385	400	705
41.55	1911/46	PH531_0050K102_0083 ME10	3600	3300	5500	≤19	0.93	17	61	4.0	2.0	220	385	400	705
41.55	1911/46	PH531_0050K102_0083 ME20	3600	3300	5500	≤24	2.8	18	62	4.0	2.0	220	385	400	705
46.25	8740/189	PH531_0050K102_0092 ME10	3600	3300	5500	≤19	0.97	17	61	4.0	2.0	220	385	400	705
46.25	8740/189	PH531_0050K102_0092 ME20	3600	3300	5500	≤24	2.9	18	62	4.0	2.0	220	385	400	705
57.83	1330/23	PH531_0050K102_0115 ME10	3600	3300	5500	≤19	0.88	17	62	4.0	2.0	220	385	400	705
57.83	1330/23	PH531_0050K102_0115 ME20	3600	3300	5500	≤24	2.8	18	62	4.0	2.0	220	385	400	705
70.57	494/7	PH531_0050K102_0140 ME10	4000	3800	6000	≤19	0.82	17	62	4.0	2.0	220	385	400	705
70.57	494/7	PH531_0050K102_0140 ME20	3700	3700	6000	≤24	2.7	18	62	4.0	2.0	220	385	400	705
87.82	10450/119	PH531_0050K102_0175 ME10	4000	3800	6000	≤19	0.77	17	62	4.0	2.0	220	385	400	705
87.82	10450/119	PH531_0050K102_0175 ME20	3700	3700	6000	≤24	2.7	18	62	4.0	2.0	220	385	400	705
116.3	5700/49	PH531_0050K102_0230 ME10	4000	4000	7000	≤19	0.72	17	62	4.0	2.0	220	385	400	705
116.3	5700/49	PH531_0050K102_0230 ME20	3700	3700	6000	≤24	2.6	18	62	4.0	2.0	220	385	400	705
140.2	2945/21	PH531_0050K102_0280 ME10	4000	4000	7000	≤19	0.70	17	62	4.0	2.0	220	385	400	705
140.2	2945/21	PH531_0050K102_0280 ME20	3700	3700	6000	≤24	2.6	18	62	4.0	2.0	220	385	400	705
175.5	3686/21	PH531_0050K102_0350 ME10	4000	4000	7000	≤19	0.68	17	62	4.0	2.0	220	385	400	705
175.5	3686/21	PH531_0050K102_0350 ME20	3700	3700	6000	≤24	2.6	18	62	4.0	2.0	220	385	400	705
234.6	11495/49	PH531_0050K102_0470 ME10	4000	4000	7000	≤19	0.63	17	62	4.0	2.0	220	385	400	705
280.5	5890/21	PH531_0050K102_0560 ME10	4000	4000	7000	≤19	0.62	17	62	4.0	2.0	220	385	400	705
PH731K ($M_{2acc,max}$ = 924 Nm)															
16.00	16/1	PH731_0040K202_0040 ME20	3000	2600	4500	≤32	6.8	31	99	4.5	2.5	440	670	670	1212
16.00	16/1	PH731_0040K202_0040 ME30	3000	2600	4500	≤38	12	33	99	4.5	2.5	440	670	670	1212
20.00	20/1	PH731_0050K202_0040 ME20	3000	2600	4500	≤32	6.6	31	116	4.0	2.0	440	838	838	1516
20.00	20/1	PH731_0050K202_0040 ME30	3000	2600	4500	≤38	12	33	116	4.0	2.0	440	838	838	1516
25.89	10535/407	PH731_0050K202_0052 ME20	3000	2600	4500	≤32	5.8	31	116	4.0	2.0	440	882	913	1720
25.89	10535/407	PH731_0050K202_0052 ME30	3000	2600	4500	≤38	11	33	116	4.0	2.0	440	882	913	1720
28.00	28/1	PH731_0070K102_0040 ME10	3300	2800	5000	≤19	1.6	22	108	4.0	2.0	438	626	626	849
28.00	28/1	PH731_0070K102_0040 ME20	3300	2800	5000	≤24	3.5	23	109	4.0	2.0	438	626	626	849
30.00	30/1	PH731_0050K202_0060 ME10	3000	2600	4500	≤19	2.4	30	114	4.0	2.0	440	670	670	909
30.00	30/1	PH731_0050K202_0060 ME20	3000	2600	4500	≤32	5.8	31	116	4.0	2.0	440	882	924	1720
30.00	30/1	PH731_0050K202_0060 ME30	3000	2600	4500	≤38	11	33	116	4.0	2.0	440	882	924	1720
33.42	11395/341	PH731_0050K202_0067 ME10	3500	3100	5000	≤19	1.8	30	115	4.0	2.0	440	747	747	1013
33.42	11395/341	PH731_0050K202_0067 ME20	3500	3100	5000	≤32	5.2	31	116	4.0	2.0	440	882	924	1720
33.42	11395/341	PH731_0050K202_0067 ME30	3500	3100	5000	≤38	11	33	117	4.0	2.0	440	882	924	1720
38.98	1520/39	PH731_0070K102_0056 ME10	3300	2800	5000	≤19	1.3	22	109	4.0	2.0	440	733	733	1182
38.98	1520/39	PH731_0070K102_0056 ME20	3300	2800	5000	≤24	3.2	23	110	4.0	2.0	440	733	733	1182
40.00	40/1	PH731_0100K102_0040 ME10	3300	2800	5000	≤19	1.5	22	104	3.5	1.5	350	575	575	1150
40.00	40/1	PH731_0100K102_0040 ME20	3300	2800	5000	≤24	3.4	23	105	3.5	1.5	350	575	575	1150
41.99	12470/297	PH731_0050K202_0084 ME10	3500	3100	5000	≤19	1.4	30	116	4.0	2.0	440	882	924	1273
41.99	12470/297	PH731_0050K202_0084 ME20	3500	3100	5000	≤32	4.8	31	117	4.0	2.0	440	882	924	1720
41.99	12470/297	PH731_0050K202_0084 ME30	3500	3100	5000	≤38	10	33	117	4.0	2.0	440	882	924	1720
42.00	42/1	PH731_0070K102_0060 ME10	3300	2800	5000	≤19	1.1	22	110	4.0	2.0	440	752	752	1273
42.00	42/1	PH731_0070K102_0060 ME20	3300	2800	5000	≤24	3.0	23	110	4.0	2.0	440	752	752	1273

i	i_{exakt}	Type	n_{1MAXDB} EL1,2 [rpm]	n_{1MAXDB} EL3,4,5,6 [rpm]	n_{1MAXZB} [rpm]	d_{MW} [mm]	J_1 [kgcm²]	m [kg]	C_2 [Nm/arcmin]	$\Delta\varphi_2$ [arcmin]	$\Delta\varphi_{2red}$ [arcmin]	M_{2N} [Nm]	M_{2acc} [Nm]	M_{2accHT} [Nm]	M_{2NOT} [Nm]
PH731K ($M_{2acc,max}$ = 924 Nm)															
45.95	11395/248	PH731_0050K202_0092 ME10	3500	3100	5000	≤19	1.6	30	116	4.0	2.0	440	882	924	1393
45.95	11395/248	PH731_0050K202_0092 ME20	3500	3100	5000	≤32	5.0	31	117	4.0	2.0	440	882	924	1720
45.95	11395/248	PH731_0050K202_0092 ME30	3500	3100	5000	≤38	10	33	117	4.0	2.0	440	882	924	1720
46.51	2093/45	PH731_0070K102_0066 ME10	3600	3300	5500	≤19	1.1	22	110	4.0	2.0	440	778	778	1410
46.51	2093/45	PH731_0070K102_0066 ME20	3600	3300	5500	≤24	3.0	23	110	4.0	2.0	440	778	778	1410
55.68	15200/273	PH731_0100K102_0056 ME10	3300	2800	5000	≤19	1.3	22	105	3.5	1.5	350	575	575	1150
55.68	15200/273	PH731_0100K102_0056 ME20	3300	2800	5000	≤24	3.2	23	105	3.5	1.5	350	575	575	1150
57.73	6235/108	PH731_0050K202_0115 ME10	3500	3100	5000	≤19	1.3	30	116	4.0	2.0	440	882	924	1720
57.73	6235/108	PH731_0050K202_0115 ME20	3500	3100	5000	≤32	4.7	31	117	4.0	2.0	440	882	924	1720
57.73	6235/108	PH731_0050K202_0115 ME30	3500	3100	5000	≤38	10	33	117	4.0	2.0	440	882	924	1720
58.16	13377/230	PH731_0070K102_0083 ME10	3600	3300	5500	≤19	0.94	22	110	4.0	2.0	440	838	838	1545
58.16	13377/230	PH731_0070K102_0083 ME20	3600	3300	5500	≤24	2.8	23	110	4.0	2.0	440	838	838	1545
60.00	60/1	PH731_0100K102_0060 ME10	3300	2800	5000	≤19	1.1	22	105	3.5	1.5	350	575	575	1150
60.00	60/1	PH731_0100K102_0060 ME20	3300	2800	5000	≤24	3.0	23	105	3.5	1.5	350	575	575	1150
64.74	1748/27	PH731_0070K102_0092 ME10	3600	3300	5500	≤19	0.98	22	110	4.0	2.0	440	868	868	1545
64.74	1748/27	PH731_0070K102_0092 ME20	3600	3300	5500	≤24	2.9	23	110	4.0	2.0	440	868	868	1545
66.44	598/9	PH731_0100K102_0066 ME10	3600	3300	5500	≤19	1.1	22	105	3.5	1.5	350	575	575	1150
66.44	598/9	PH731_0100K102_0066 ME20	3600	3300	5500	≤24	2.9	23	105	3.5	1.5	350	575	575	1150
69.26	14405/208	PH731_0050K202_0140 ME10	3900	3500	5500	≤19	1.1	30	116	4.0	2.0	440	882	924	1720
69.26	14405/208	PH731_0050K202_0140 ME20	3700	3500	5500	≤32	4.6	31	117	4.0	2.0	440	882	924	1720
69.26	14405/208	PH731_0050K202_0140 ME30	3500	3500	5000	≤38	9.9	33	117	4.0	2.0	440	882	924	1720
70.98	3549/50	PH731_0070K102_0100 ME10	4000	3800	6000	≤19	0.86	22	110	4.0	2.0	440	840	840	1545
70.98	3549/50	PH731_0070K102_0100 ME20	3700	3700	6000	≤24	2.8	23	110	4.0	2.0	440	840	840	1545
80.96	1862/23	PH731_0070K102_0115 ME10	3600	3300	5500	≤19	0.88	22	110	4.0	2.0	440	869	869	1545
80.96	1862/23	PH731_0070K102_0115 ME20	3600	3300	5500	≤24	2.8	23	111	4.0	2.0	440	869	869	1545
83.09	1911/23	PH731_0100K102_0083 ME10	3600	3300	5500	≤19	0.93	22	105	3.5	1.5	350	575	575	1150
83.09	1911/23	PH731_0100K102_0083 ME20	3600	3300	5500	≤24	2.8	23	105	3.5	1.5	350	575	575	1150
87.35	2795/32	PH731_0050K202_0175 ME10	3900	3500	5500	≤19	1.0	30	117	4.0	2.0	440	882	924	1720
87.35	2795/32	PH731_0050K202_0175 ME20	3700	3500	5500	≤32	4.4	31	117	4.0	2.0	440	882	924	1720
87.35	2795/32	PH731_0050K202_0175 ME30	3500	3500	5000	≤38	9.7	33	117	4.0	2.0	440	882	924	1720
88.33	3003/34	PH731_0070K102_0125 ME10	4000	3800	6000	≤19	0.79	22	110	4.0	2.0	440	840	840	1545
88.33	3003/34	PH731_0070K102_0125 ME20	3700	3700	6000	≤24	2.7	23	111	4.0	2.0	440	840	840	1545
92.49	17480/189	PH731_0100K102_0092 ME10	3600	3300	5500	≤19	0.97	22	105	3.5	1.5	350	575	575	1150
92.49	17480/189	PH731_0100K102_0092 ME20	3600	3300	5500	≤24	2.9	23	105	3.5	1.5	350	575	575	1150
98.80	494/5	PH731_0070K102_0140 ME10	4000	3800	6000	≤19	0.82	22	110	4.0	2.0	440	869	869	1545
98.80	494/5	PH731_0070K102_0140 ME20	3700	3700	6000	≤24	2.7	23	111	4.0	2.0	440	869	869	1545
115.7	2660/23	PH731_0100K102_0115 ME10	3600	3300	5500	≤19	0.88	22	105	3.5	1.5	350	575	575	1150
115.7	2660/23	PH731_0100K102_0115 ME20	3600	3300	5500	≤24	2.8	23	105	3.5	1.5	350	575	575	1150
115.9	14835/128	PH731_0050K202_0230 ME10	4000	3900	6500	≤19	0.87	30	117	4.0	2.0	440	882	924	1720
115.9	14835/128	PH731_0050K202_0230 ME20	3700	3700	6000	≤32	4.3	31	117	4.0	2.0	440	882	924	1720
115.9	14835/128	PH731_0050K202_0230 ME30	3500	3500	5000	≤38	9.6	33	117	4.0	2.0	440	882	924	1720
117.0	117/1	PH731_0070K102_0165 ME10	4000	4000	7000	≤19	0.74	22	110	4.0	2.0	440	840	840	1545
117.0	117/1	PH731_0070K102_0165 ME20	3700	3700	6000	≤24	2.6	23	111	4.0	2.0	440	840	840	1545
122.9	2090/17	PH731_0070K102_0175 ME10	4000	3800	6000	≤19	0.77	22	111	4.0	2.0	440	869	869	1545
122.9	2090/17	PH731_0070K102_0175 ME20	3700	3700	6000	≤24	2.7	23	111	4.0	2.0	440	869	869	1545
139.8	559/4	PH731_0050K202_0280 ME10	4000	3900	6500	≤19	0.81	30	117	4.0	2.0	440	882	924	1720
139.8	559/4	PH731_0050K202_0280 ME20	3700	3700	6000	≤24	2.7	31	117	4.0	2.0	440	882	924	1720
141.1	2821/20	PH731_0070K102_0200 ME10	4000	4000	7000	≤19	0.71	22	111	4.0	2.0	440	840	840	1545
141.1	2821/20	PH731_0070K102_0200 ME20	3700	3700	6000	≤24	2.6	23	111	4.0	2.0	440	840	840	1545
162.9	1140/7	PH731_0070K102_0230 ME10	4000	4000	7000	≤19	0.72	22	111	4.0	2.0	440	869	869	1545
162.9	1140/7	PH731_0070K102_0230 ME20	3700	3700	6000	≤24	2.6	23	111	4.0	2.0	440	869	869	1545
172.8	9675/56	PH731_0050K202_0350 ME10	4000	3900	6500	≤19	0.76	30	117	4.0	2.0	440	882	924	1720
172.8	9675/56	PH731_0050K202_0350 ME20	3700	3700	6000	≤24	2.7	31	117	4.0	2.0	440	882	924	1720
176.5	8827/50	PH731_0070K102_0250 ME10	4000	4000	7000	≤19	0.68	22	111	4.0	2.0	440	774	774	1401
176.5	8827/50	PH731_0070K102_0250 ME20	3700	3700	6000	≤24	2.6	23	111	4.0	2.0	440	774	774	1401
196.3	589/3	PH731_0070K102_0280 ME10	4000	4000	7000	≤19	0.70	22	111	4.0	2.0	440	869	869	1545
196.3	589/3	PH731_0070K102_0280 ME20	3700	3700	6000	≤24	2.6	23	111	4.0	2.0	440	869	869	1545
231.1	1849/8	PH731_0050K202_0460 ME10	4000	3900	6500	≤19	0.71	30	117	4.0	2.0	440	882	924	1720
231.1	1849/8	PH731_0050K202_0460 ME20	3700	3700	6000	≤24	2.6	31	117	4.0	2.0	440	882	924	1720
232.7	11400/49	PH731_0100K102_0230 ME10	4000	4000	7000	≤19	0.72	22	105	3.5	1.5	350	575	575	1150
232.7	11400/49	PH731_0100K102_0230 ME20	3700	3700	6000	≤24	2.6	23	105	3.5	1.5	350	575	575	1150
235.9	4719/20	PH731_0070K102_0340 ME10	4000	4000	7000	≤19	0.63	22	111	4.0	2.0	440	589	589	1064
245.7	3686/15	PH731_0070K102_0350 ME10	4000	4000	7000	≤19	0.68	22	111	4.0	2.0	440	869	869	1545
245.7	3686/15	PH731_0070K102_0350 ME20	3700	3700	6000	≤24	2.6	23	111	4.0	2.0	440	869	869	1545

i	i_{exakt}	Type	n_{1MAXDB} EL1,2 [rpm]	n_{1MAXDB} EL3,4,5,6 [rpm]	n_{1MAXZB} [rpm]	d_{MW} [mm]	J_1 [kgcm²]	m [kg]	C_2 [Nm/arcmin]	$\Delta\varphi_2$ [arcmin]	$\Delta\varphi_{2red}$ [arcmin]	M_{2N} [Nm]	M_{2acc} [Nm]	M_{2accHT} [Nm]	M_{2NOT} [Nm]
PH731K ($M_{2acc,max}$ = 924 Nm)															
277.7	6665/24	PH731_0050K202_0560 ME10	4000	3900	6500	≤19	0.66	30	117	4.0	2.0	440	882	915	1416
280.5	5890/21	PH731_0100K102_0280 ME10	4000	4000	7000	≤19	0.70	22	105	3.5	1.5	350	575	575	1150
280.5	5890/21	PH731_0100K102_0280 ME20	3700	3700	6000	≤24	2.6	23	105	3.5	1.5	350	575	575	1150
282.1	2821/10	PH731_0070K102_0400 ME10	4000	4000	7000	≤19	0.62	22	111	4.0	2.0	413	496	496	896
328.4	2299/7	PH731_0070K102_0470 ME10	4000	4000	7000	≤19	0.63	22	111	4.0	2.0	440	819	819	1482
351.1	7372/21	PH731_0100K102_0350 ME10	4000	4000	7000	≤19	0.68	22	105	3.5	1.5	350	575	575	1150
351.1	7372/21	PH731_0100K102_0350 ME20	3700	3700	6000	≤24	2.6	23	105	3.5	1.5	350	575	575	1150
352.2	35217/100	PH731_0070K102_0500 ME10	4000	4000	7000	≤19	0.62	22	111	4.0	2.0	336	403	403	728
392.7	1178/3	PH731_0070K102_0560 ME10	4000	4000	7000	≤19	0.62	22	111	4.0	2.0	440	690	690	1248
469.2	22990/49	PH731_0100K102_0470 ME10	4000	4000	7000	≤19	0.63	22	105	3.5	1.5	350	575	575	1150
490.2	2451/5	PH731_0070K102_0700 ME10	4000	4000	7000	≤19	0.62	22	111	4.0	2.0	440	561	561	1014
561.0	11780/21	PH731_0100K102_0560 ME10	4000	4000	7000	≤19	0.62	22	105	3.5	1.5	350	575	575	1150
PH831K ($M_{2acc,max}$ = 1848 Nm)															
16.00	16/1	PH831_0040K302_0040 ME20	2700	2300	4000	≤32	11	54	180	4.0	2.0	782	894	894	1212
16.00	16/1	PH831_0040K302_0040 ME30	2700	2300	4000	≤38	16	56	183	4.0	2.0	782	1174	1174	2917
20.00	20/1	PH831_0050K302_0040 ME20	2700	2300	4000	≤32	10	54	239	4.0	2.0	978	1117	1117	1516
20.00	20/1	PH831_0050K302_0040 ME30	2700	2300	4000	≤38	15	56	243	4.0	2.0	978	1467	1467	3646
26.88	215/8	PH831_0050K302_0054 ME20	2700	2300	4000	≤32	7.8	54	242	4.0	2.0	1079	1502	1502	2037
26.88	215/8	PH831_0050K302_0054 ME30	2700	2300	4000	≤38	13	56	243	4.0	2.0	1079	1502	1502	2037
28.00	28/1	PH831_0070K202_0040 ME20	3000	2600	4500	≤32	7.0	49	242	3.5	1.5	782	1173	1173	2122
28.00	28/1	PH831_0070K202_0040 ME30	3000	2600	4500	≤38	12	51	243	3.5	1.5	782	1173	1173	2122
30.00	30/1	PH831_0050K302_0060 ME20	2700	2300	4000	≤32	8.0	54	242	4.0	2.0	1100	1676	1676	2273
30.00	30/1	PH831_0050K302_0060 ME30	2700	2300	4000	≤38	13	56	244	4.0	2.0	1100	1679	1679	3646
30.55	336/11	PH831_0070K202_0044 ME10	3000	2600	4500	≤19	3.2	48	235	3.5	1.5	683	683	683	926
30.55	336/11	PH831_0070K202_0044 ME20	3000	2600	4500	≤32	6.6	49	243	3.5	1.5	805	1207	1207	2315
30.55	336/11	PH831_0070K202_0044 ME30	3000	2600	4500	≤38	12	51	244	3.5	1.5	805	1207	1207	2315
36.24	14749/407	PH831_0070K202_0052 ME20	3000	2600	4500	≤32	6.0	49	243	3.5	1.5	852	1278	1278	2746
36.24	14749/407	PH831_0070K202_0052 ME30	3000	2600	4500	≤38	11	51	244	3.5	1.5	852	1278	1278	2746
36.96	2365/64	PH831_0050K302_0074 ME20	2700	2300	4000	≤32	7.0	54	243	4.0	2.0	1100	1800	1800	2801
36.96	2365/64	PH831_0050K302_0074 ME30	2700	2300	4000	≤38	12	56	244	4.0	2.0	1100	1800	1800	2801
40.00	40/1	PH831_0100K202_0040 ME20	3000	2600	4500	≤32	6.7	49	259	3.5	1.5	850	1392	1392	2784
40.00	40/1	PH831_0100K202_0040 ME30	3000	2600	4500	≤38	12	51	259	3.5	1.5	850	1392	1392	2784
42.00	42/1	PH831_0070K202_0060 ME10	3000	2600	4500	≤19	2.6	48	240	3.5	1.5	895	939	939	1273
42.00	42/1	PH831_0070K202_0060 ME20	3000	2600	4500	≤32	6.0	49	244	3.5	1.5	895	1342	1342	2917
42.00	42/1	PH831_0070K202_0060 ME30	3000	2600	4500	≤38	11	51	244	3.5	1.5	895	1342	1342	2917
46.34	5375/116	PH831_0050K302_0093 ME20	3200	2800	4500	≤32	6.1	54	244	4.0	2.0	1100	1848	1848	3512
46.34	5375/116	PH831_0050K302_0093 ME30	3200	2800	4500	≤38	11	56	244	4.0	2.0	1100	1848	1848	3512
46.78	15953/341	PH831_0070K202_0067 ME10	3500	3100	5000	≤19	1.9	48	241	3.5	1.5	910	1046	1046	1419
46.78	15953/341	PH831_0070K202_0067 ME20	3500	3100	5000	≤32	5.3	49	244	3.5	1.5	928	1391	1391	2917
46.78	15953/341	PH831_0070K202_0067 ME30	3500	3100	5000	≤38	11	51	245	3.5	1.5	928	1391	1391	2917
49.83	14749/296	PH831_0070K202_0071 ME20	3000	2600	4500	≤32	5.6	49	244	3.5	1.5	947	1421	1421	2917
49.83	14749/296	PH831_0070K202_0071 ME30	3000	2600	4500	≤38	11	51	245	3.5	1.5	947	1421	1421	2917
51.77	21070/407	PH831_0100K202_0052 ME20	3000	2600	4500	≤32	5.8	49	259	3.5	1.5	850	1392	1392	2784
51.77	21070/407	PH831_0100K202_0052 ME30	3000	2600	4500	≤38	11	51	260	3.5	1.5	850	1392	1392	2784
58.05	1161/20	PH831_0050K302_0115 ME10	3200	2800	4500	≤19	2.1	53	242	4.0	2.0	1100	1298	1298	1760
58.05	1161/20	PH831_0050K302_0115 ME20	3200	2800	4500	≤32	5.5	54	244	4.0	2.0	1100	1848	1848	3646
58.05	1161/20	PH831_0050K302_0115 ME30	3200	2800	4500	≤38	11	56	245	4.0	2.0	1100	1848	1848	3646
58.78	17458/297	PH831_0070K202_0084 ME10	3500	3100	5000	≤19	1.5	48	242	3.5	1.5	1000	1314	1314	1782
58.78	17458/297	PH831_0070K202_0084 ME20	3500	3100	5000	≤32	4.9	49	245	3.5	1.5	1000	1478	1478	2917
58.78	17458/297	PH831_0070K202_0084 ME30	3500	3100	5000	≤38	10	51	245	3.5	1.5	1000	1478	1478	2917
60.00	60/1	PH831_0100K202_0060 ME10	3000	2600	4500	≤19	2.4	48	257	3.5	1.5	850	1341	1341	1819
60.00	60/1	PH831_0100K202_0060 ME20	3000	2600	4500	≤32	5.8	49	259	3.5	1.5	850	1392	1392	2784
60.00	60/1	PH831_0100K202_0060 ME30	3000	2600	4500	≤38	11	51	260	3.5	1.5	850	1392	1392	2784
64.33	15953/248	PH831_0070K202_0092 ME10	3500	3100	5000	≤19	1.7	48	243	3.5	1.5	1000	1438	1438	1951
64.33	15953/248	PH831_0070K202_0092 ME20	3500	3100	5000	≤32	5.1	49	245	3.5	1.5	1000	1478	1478	2917
64.33	15953/248	PH831_0070K202_0092 ME30	3500	3100	5000	≤38	10	51	245	3.5	1.5	1000	1478	1478	2917
66.83	22790/341	PH831_0100K202_0067 ME10	3500	3100	5000	≤19	1.8	48	258	3.5	1.5	850	1392	1392	2027
66.83	22790/341	PH831_0100K202_0067 ME20	3500	3100	5000	≤32	5.2	49	260	3.5	1.5	850	1392	1392	2784
66.83	22790/341	PH831_0100K202_0067 ME30	3500	3100	5000	≤38	11	51	260	3.5	1.5	850	1392	1392	2784
69.68	7525/108	PH831_0050K302_0140 ME10	3500	3100	5000	≤19	1.7	53	243	4.0	2.0	1100	1558	1558	2113
69.68	7525/108	PH831_0050K302_0140 ME20	3500	3100	5000	≤32	5.1	54	244	4.0	2.0	1100	1848	1848	3646
69.68	7525/108	PH831_0050K302_0140 ME30	3500	3100	5000	≤38	10	56	245	4.0	2.0	1100	1848	1848	3646
70.51	20167/286	PH831_0070K202_0100 ME10	3900	3500	5500	≤19	1.3	48	243	3.5	1.5	1000	1478	1478	2138
70.51	20167/286	PH831_0070K202_0100 ME20	3700	3500	5500	≤32	4.7	49	245	3.5	1.5	1000	1478	1478	2917

i	i_{exakt}	Type	n_{1MAXDB} EL1,2 [rpm]	n_{1MAXDB} EL3,4,5,6 [rpm]	n_{1MAXZB} [rpm]	d_{MW} [mm]	J_1 [kgcm²]	m [kg]	C_2 [Nm/arcmin]	$\Delta\varphi_2$ [arcmin]	$\Delta\varphi_{2red}$ [arcmin]	M_{2N} [Nm]	M_{2acc} [Nm]	M_{2accHT} [Nm]	M_{2NOT} [Nm]
PH831K ($M_{2acc,max}$ = 1848 Nm)															
70.51	20167/286	PH831_0070K202_0100 ME30	3500	3500	5000	≤38	10	51	245	3.5	1.5	1000	1478	1478	2917
80.82	8729/108	PH831_0070K202_0115 ME10	3500	3100	5000	≤19	1.4	48	244	3.5	1.5	1000	1478	1478	2450
80.82	8729/108	PH831_0070K202_0115 ME20	3500	3100	5000	≤32	4.8	49	245	3.5	1.5	1000	1478	1478	2917
80.82	8729/108	PH831_0070K202_0115 ME30	3500	3100	5000	≤38	10	51	245	3.5	1.5	1000	1478	1478	2917
83.97	24940/297	PH831_0100K202_0084 ME10	3500	3100	5000	≤19	1.5	48	259	3.5	1.5	850	1392	1392	2546
83.97	24940/297	PH831_0100K202_0084 ME20	3500	3100	5000	≤32	4.9	49	260	3.5	1.5	850	1392	1392	2784
83.97	24940/297	PH831_0100K202_0084 ME30	3500	3100	5000	≤38	10	51	260	3.5	1.5	850	1392	1392	2784
86.47	7955/92	PH831_0050K302_0175 ME10	3500	3100	5000	≤19	1.4	53	244	4.0	2.0	1100	1848	1848	2621
86.47	7955/92	PH831_0050K302_0175 ME20	3500	3100	5000	≤32	4.8	54	245	4.0	2.0	1100	1848	1848	3646
86.47	7955/92	PH831_0050K302_0175 ME30	3500	3100	5000	≤38	10	56	245	4.0	2.0	1100	1848	1848	3646
88.94	3913/44	PH831_0070K202_0125 ME10	3900	3500	5500	≤19	1.1	48	244	3.5	1.5	1000	1478	1478	2696
88.94	3913/44	PH831_0070K202_0125 ME20	3700	3500	5500	≤32	4.5	49	245	3.5	1.5	1000	1478	1478	2917
88.94	3913/44	PH831_0070K202_0125 ME30	3500	3500	5000	≤38	9.8	51	245	3.5	1.5	1000	1478	1478	2917
91.90	11395/124	PH831_0100K202_0092 ME10	3500	3100	5000	≤19	1.6	48	259	3.5	1.5	850	1392	1392	2784
91.90	11395/124	PH831_0100K202_0092 ME20	3500	3100	5000	≤32	5.0	49	260	3.5	1.5	850	1392	1392	2784
91.90	11395/124	PH831_0100K202_0092 ME30	3500	3100	5000	≤38	10	51	260	3.5	1.5	850	1392	1392	2784
96.96	20167/208	PH831_0070K202_0140 ME10	3900	3500	5500	≤19	1.2	48	244	3.5	1.5	1000	1478	1478	2917
96.96	20167/208	PH831_0070K202_0140 ME20	3700	3500	5500	≤32	4.6	49	245	3.5	1.5	1000	1478	1478	2917
96.96	20167/208	PH831_0070K202_0140 ME30	3500	3500	5000	≤38	9.9	51	245	3.5	1.5	1000	1478	1478	2917
115.5	6235/54	PH831_0100K202_0115 ME10	3500	3100	5000	≤19	1.3	48	259	3.5	1.5	850	1392	1392	2784
115.5	6235/54	PH831_0100K202_0115 ME20	3500	3100	5000	≤32	4.7	49	260	3.5	1.5	850	1392	1392	2784
115.5	6235/54	PH831_0100K202_0115 ME30	3500	3100	5000	≤38	10	51	260	3.5	1.5	850	1392	1392	2784
116.5	2795/24	PH831_0050K302_0230 ME10	3800	3500	6000	≤19	1.1	53	244	4.0	2.0	1100	1848	1848	3358
116.5	2795/24	PH831_0050K302_0230 ME20	3700	3500	6000	≤32	4.5	54	245	4.0	2.0	1100	1848	1848	3646
116.5	2795/24	PH831_0050K302_0230 ME30	3500	3500	5000	≤38	9.9	56	245	4.0	2.0	1100	1848	1848	3646
118.0	20769/176	PH831_0070K202_0170 ME10	4000	3900	6500	≤19	0.92	48	245	3.5	1.5	1000	1478	1478	2917
118.0	20769/176	PH831_0070K202_0170 ME20	3700	3700	6000	≤32	4.3	49	245	3.5	1.5	1000	1478	1478	2917
118.0	20769/176	PH831_0070K202_0170 ME30	3500	3500	5000	≤38	9.6	51	245	3.5	1.5	1000	1478	1478	2917
122.3	3913/32	PH831_0070K202_0175 ME10	3900	3500	5500	≤19	1.0	48	245	3.5	1.5	1000	1478	1478	2917
122.3	3913/32	PH831_0070K202_0175 ME20	3700	3500	5500	≤32	4.4	49	245	3.5	1.5	1000	1478	1478	2917
122.3	3913/32	PH831_0070K202_0175 ME30	3500	3500	5000	≤38	9.7	51	245	3.5	1.5	1000	1478	1478	2917
138.5	14405/104	PH831_0100K202_0140 ME10	3900	3500	5500	≤19	1.2	48	260	3.5	1.5	850	1392	1392	2784
138.5	14405/104	PH831_0100K202_0140 ME20	3700	3500	5500	≤32	4.6	49	260	3.5	1.5	850	1392	1392	2784
138.5	14405/104	PH831_0100K202_0140 ME30	3500	3500	5000	≤38	9.9	51	260	3.5	1.5	850	1392	1392	2784
139.4	17845/128	PH831_0050K302_0280 ME10	3800	3500	6000	≤19	1.0	53	244	4.0	2.0	1100	1848	1848	3646
139.4	17845/128	PH831_0050K302_0280 ME20	3700	3500	6000	≤32	4.4	54	245	4.0	2.0	1100	1848	1848	3646
139.4	17845/128	PH831_0050K302_0280 ME30	3500	3500	5000	≤38	9.7	56	245	4.0	2.0	1100	1848	1848	3646
142.3	7826/55	PH831_0070K202_0200 ME10	4000	3900	6500	≤19	0.85	48	245	3.5	1.5	1000	1478	1478	2917
142.3	7826/55	PH831_0070K202_0200 ME20	3700	3700	6000	≤24	2.7	49	245	3.5	1.5	1000	1478	1478	2917
162.3	20769/128	PH831_0070K202_0230 ME10	4000	3900	6500	≤19	0.88	48	245	3.5	1.5	1000	1478	1478	2917
162.3	20769/128	PH831_0070K202_0230 ME20	3700	3700	6000	≤32	4.3	49	245	3.5	1.5	1000	1478	1478	2917
162.3	20769/128	PH831_0070K202_0230 ME30	3500	3500	5000	≤38	9.6	51	245	3.5	1.5	1000	1478	1478	2917
173.7	4515/26	PH831_0050K302_0350 ME10	3800	3500	6000	≤19	0.90	53	245	4.0	2.0	1100	1848	1848	3646
173.7	4515/26	PH831_0050K302_0350 ME20	3700	3500	6000	≤24	2.8	54	245	4.0	2.0	1100	1848	1848	3646
174.7	2795/16	PH831_0100K202_0175 ME10	3900	3500	5500	≤19	1.0	48	260	3.5	1.5	850	1392	1392	2784
174.7	2795/16	PH831_0100K202_0175 ME20	3700	3500	5500	≤32	4.4	49	260	3.5	1.5	850	1392	1392	2784
174.7	2795/16	PH831_0100K202_0175 ME30	3500	3500	5000	≤38	9.7	51	260	3.5	1.5	850	1392	1392	2784
175.9	1935/11	PH831_0070K202_0250 ME10	4000	3900	6500	≤19	0.78	48	245	3.5	1.5	1000	1478	1478	2917
175.9	1935/11	PH831_0070K202_0250 ME20	3700	3700	6000	≤24	2.7	49	245	3.5	1.5	1000	1478	1478	2917
195.7	3913/20	PH831_0070K202_0280 ME10	4000	3900	6500	≤19	0.82	48	245	3.5	1.5	1000	1478	1478	2917
195.7	3913/20	PH831_0070K202_0280 ME20	3700	3700	6000	≤24	2.7	49	245	3.5	1.5	1000	1478	1478	2917
231.1	1849/8	PH831_0050K302_0460 ME10	3800	3500	6000	≤19	0.80	53	245	4.0	2.0	1100	1848	1848	3585
231.1	1849/8	PH831_0050K302_0460 ME20	3700	3500	6000	≤24	2.7	54	245	4.0	2.0	1100	1848	1848	3585
231.8	14835/64	PH831_0100K202_0230 ME10	4000	3900	6500	≤19	0.87	48	260	3.5	1.5	850	1392	1392	2784
231.8	14835/64	PH831_0100K202_0230 ME20	3700	3700	6000	≤32	4.3	49	260	3.5	1.5	850	1392	1392	2784
231.8	14835/64	PH831_0100K202_0230 ME30	3500	3500	5000	≤38	9.6	51	260	3.5	1.5	850	1392	1392	2784
235.3	12943/55	PH831_0070K202_0340 ME10	4000	3900	6500	≤19	0.72	48	245	3.5	1.5	1000	1242	1242	2246
235.3	12943/55	PH831_0070K202_0340 ME20	3700	3700	6000	≤24	2.6	49	245	3.5	1.5	1000	1242	1242	2246
241.9	1935/8	PH831_0070K202_0350 ME10	4000	3900	6500	≤19	0.76	48	245	3.5	1.5	1000	1478	1478	2917
241.9	1935/8	PH831_0070K202_0350 ME20	3700	3700	6000	≤24	2.7	49	245	3.5	1.5	1000	1478	1478	2917
278.5	12255/44	PH831_0050K302_0560 ME10	3800	3500	6000	≤19	0.75	53	245	4.0	2.0	1100	1525	1525	2757
278.5	12255/44	PH831_0050K302_0560 ME20	3700	3500	6000	≤24	2.6	54	245	4.0	2.0	1100	1525	1525	2757
279.5	559/2	PH831_0100K202_0280 ME10	4000	3900	6500	≤19	0.81	48	260	3.5	1.5	850	1392	1392	2784
279.5	559/2	PH831_0100K202_0280 ME20	3700	3700	6000	≤24	2.7	49	260	3.5	1.5	850	1392	1392	2784

i	i_{exakt}	Type	n_{1MAXDB} EL1,2 [rpm]	n_{1MAXDB} EL3,4,5,6 [rpm]	n_{1MAXZB} [rpm]	d_{MW} [mm]	J_1 [kgcm²]	m [kg]	C_2 [Nm/arcmin]	$\Delta\varphi_2$ [arcmin]	$\Delta\varphi_{2red}$ [arcmin]	M_{2N} [Nm]	M_{2acc} [Nm]	M_{2accHT} [Nm]	M_{2NOT} [Nm]
PH831K ($M_{2acc,max}$ = 1848 Nm)															
282.8	9331/33	PH831_0070K202_0400 ME10	4000	3900	6500	≤19	0.67	48	245	3.5	1.5	776	931	931	1441
323.6	12943/40	PH831_0070K202_0460 ME10	4000	3900	6500	≤19	0.71	48	245	3.5	1.5	1000	1478	1478	2917
323.6	12943/40	PH831_0070K202_0460 ME20	3700	3700	6000	≤24	2.6	49	245	3.5	1.5	1000	1478	1478	2917
345.5	9675/28	PH831_0100K202_0350 ME10	4000	3900	6500	≤19	0.76	48	260	3.5	1.5	850	1392	1392	2784
345.5	9675/28	PH831_0100K202_0350 ME20	3700	3700	6000	≤24	2.7	49	260	3.5	1.5	850	1392	1392	2784
353.4	46655/132	PH831_0070K202_0500 ME10	4000	3900	6500	≤19	0.65	48	245	3.5	1.5	647	776	776	1352
388.8	9331/24	PH831_0070K202_0560 ME10	4000	3900	6500	≤19	0.66	48	245	3.5	1.5	1000	1281	1281	1982
462.3	1849/4	PH831_0100K202_0460 ME10	4000	3900	6500	≤19	0.71	48	260	3.5	1.5	850	1392	1392	2784
462.3	1849/4	PH831_0100K202_0460 ME20	3700	3700	6000	≤24	2.6	49	260	3.5	1.5	850	1392	1392	2784
486.0	46655/96	PH831_0070K202_0690 ME10	4000	3900	6500	≤19	0.64	48	245	3.5	1.5	889	1067	1067	1859
555.4	6665/12	PH831_0100K202_0560 ME10	4000	3900	6500	≤19	0.66	48	260	3.5	1.5	850	1392	1392	2784
PH931K ($M_{2acc,max}$ = 4500 Nm)															
32.54	17081/525	PH931_0040K513_0081 ME30	1900	1800	3200	≤38	25	91	521	4.5	–	2758	3840	–	6480
32.54	17081/525	PH931_0040K513_0081 ME40	1900	1800	3200	≤48	47	96	520	4.5	–	2758	3840	–	6480
40.60	203/5	PH931_0040K513_0100 ME30	1900	1800	3200	≤38	21	91	522	4.5	–	2884	3840	–	7500
40.60	203/5	PH931_0040K513_0100 ME40	1900	1800	3200	≤48	43	96	522	4.5	–	2884	3840	–	7500
48.80	17081/350	PH931_0060K513_0081 ME30	1900	1800	3200	≤38	24	91	727	4.0	–	3000	4500	–	9000
48.80	17081/350	PH931_0060K513_0081 ME40	1900	1800	3200	≤48	46	96	726	4.0	–	3000	4500	–	9000
60.90	609/10	PH931_0060K513_0100 ME30	1900	1800	3200	≤38	20	91	728	4.0	–	3000	4500	–	9000
60.90	609/10	PH931_0060K513_0100 ME40	1900	1800	3200	≤48	42	96	728	4.0	–	3000	4500	–	9000
76.85	1537/20	PH931_0060K513_0130 ME30	2300	2200	3600	≤38	17	91	729	4.0	–	3000	4500	–	9000
76.85	1537/20	PH931_0060K513_0130 ME40	2300	2200	3600	≤48	39	96	728	4.0	–	3000	4500	–	9000
96.56	26071/270	PH931_0060K513_0160 ME20	2300	2200	3600	≤32	9.4	89	728	4.0	–	3000	4500	–	7209
96.56	26071/270	PH931_0060K513_0160 ME30	2300	2200	3600	≤38	15	91	729	4.0	–	3000	4500	–	9000
96.56	26071/270	PH931_0060K513_0160 ME40	2300	2200	3600	≤48	37	96	729	4.0	–	3000	4500	–	9000
116.1	27869/240	PH931_0060K513_0195 ME20	2800	2500	4200	≤32	8.2	89	728	4.0	–	3000	4500	–	8669
116.1	27869/240	PH931_0060K513_0195 ME30	2800	2500	4200	≤38	14	91	729	4.0	–	3000	4500	–	9000
116.1	27869/240	PH931_0060K513_0195 ME40	2800	2500	4200	≤48	36	96	729	4.0	–	3000	4500	–	9000
146.1	11687/80	PH931_0060K513_0240 ME20	2800	2500	4200	≤32	7.0	89	729	4.0	–	3000	4500	–	9000
146.1	11687/80	PH931_0060K513_0240 ME30	2800	2500	4200	≤38	12	91	730	4.0	–	3000	4500	–	9000
146.1	11687/80	PH931_0060K513_0240 ME40	2800	2500	4200	≤48	34	96	730	4.0	–	3000	4500	–	9000
193.8	62031/320	PH931_0060K513_0320 ME20	3400	3000	5000	≤32	6.0	89	729	4.0	–	3000	4500	–	9000
193.8	62031/320	PH931_0060K513_0320 ME30	3400	3000	5000	≤38	11	91	730	4.0	–	3000	4500	–	9000
193.8	62031/320	PH931_0060K513_0320 ME40	3000	3000	4500	≤48	33	96	730	4.0	–	3000	4500	–	9000
231.2	8091/35	PH931_0060K513_0390 ME20	3400	3000	5000	≤32	5.5	89	730	4.0	–	3000	4500	–	9000
231.2	8091/35	PH931_0060K513_0390 ME30	3400	3000	5000	≤38	11	91	730	4.0	–	3000	4500	–	9000
289.0	8091/28	PH931_0060K513_0480 ME20	3400	3000	5000	≤32	5.0	89	730	4.0	–	3000	4500	–	9000
289.0	8091/28	PH931_0060K513_0480 ME30	3400	3000	5000	≤38	10	91	730	4.0	–	3000	4500	–	9000
387.3	25172/65	PH931_0060K513_0650 ME20	3400	3000	5000	≤32	4.7	89	730	4.0	–	3000	4500	–	9000
387.3	25172/65	PH931_0060K513_0650 ME30	3400	3000	5000	≤38	10	91	730	4.0	–	3000	4500	–	9000
465.6	26071/56	PH931_0060K513_0780 ME20	3400	3000	5000	≤24	3.0	89	730	4.0	–	3000	4500	–	8832
PH1031K ($M_{2acc,max}$ = 7500 Nm)															
48.64	255285/5248	PH1031_0060K613_0081 ME30	1800	1700	3000	≤38	37	135	1201	4.0	–	5000	7144	–	9689
48.64	255285/5248	PH1031_0060K613_0081 ME40	1800	1700	3000	≤48	60	140	1202	4.0	–	5000	7500	–	15000
48.64	255285/5248	PH1031_0060K613_0081 ME50	1800	1700	3000	≤60	88	148	1205	4.0	–	5000	7500	–	15000
75.77	9699/128	PH1031_0060K613_0125 ME30	2200	2000	3500	≤38	24	135	1206	4.0	–	5000	7500	–	15000
75.77	9699/128	PH1031_0060K613_0125 ME40	2200	2000	3500	≤48	46	140	1206	4.0	–	5000	7500	–	15000
75.77	9699/128	PH1031_0060K613_0125 ME50	2200	2000	3500	≤60	75	148	1207	4.0	–	5000	7500	–	15000
95.21	54839/576	PH1031_0060K613_0160 ME30	2200	2000	3500	≤38	20	135	1207	4.0	–	5000	7500	–	15000
95.21	54839/576	PH1031_0060K613_0160 ME40	2200	2000	3500	≤48	42	140	1207	4.0	–	5000	7500	–	15000
95.21	54839/576	PH1031_0060K613_0160 ME50	2200	2000	3500	≤60	71	148	1208	4.0	–	5000	7500	–	15000
114.0	51057/448	PH1031_0060K613_0190 ME20	2600	2300	4000	≤32	12	133	1205	4.0	–	5000	6273	–	8508
114.0	51057/448	PH1031_0060K613_0190 ME30	2600	2300	4000	≤38	17	135	1208	4.0	–	5000	7500	–	15000
114.0	51057/448	PH1031_0060K613_0190 ME40	2600	2300	4000	≤48	39	140	1208	4.0	–	5000	7500	–	15000
114.0	51057/448	PH1031_0060K613_0190 ME50	2500	2300	4000	≤60	68	148	1209	4.0	–	5000	7500	–	15000
144.0	73749/512	PH1031_0060K613_0240 ME30	2600	2300	4000	≤38	15	135	1209	4.0	–	5000	7500	–	15000
144.0	73749/512	PH1031_0060K613_0240 ME40	2600	2300	4000	≤48	37	140	1209	4.0	–	5000	7500	–	15000
144.0	73749/512	PH1031_0060K613_0240 ME50	2500	2300	4000	≤60	66	148	1209	4.0	–	5000	7500	–	15000
191.1	391437/2048	PH1031_0060K613_0320 ME20	3100	2800	4500	≤32	7.7	133	1208	4.0	–	5000	7500	–	12521
191.1	391437/2048	PH1031_0060K613_0320 ME30	3100	2800	4500	≤38	13	135	1209	4.0	–	5000	7500	–	15000
191.1	391437/2048	PH1031_0060K613_0320 ME40	3000	2800	4500	≤48	35	140	1209	4.0	–	5000	7500	–	15000
191.1	391437/2048	PH1031_0060K613_0320 ME50	2500	2500	4000	≤60	64	148	1209	4.0	–	5000	7500	–	15000
229.9	470859/2048	PH1031_0060K613_0380 ME20	3100	2800	4500	≤32	6.7	133	1209	4.0	–	5000	7500	–	13589
229.9	470859/2048	PH1031_0060K613_0380 ME30	3100	2800	4500	≤38	12	135	1209	4.0	–	5000	7500	–	15000

i	i_{exakt}	Type	n_{1MAXDB} EL1,2 [rpm]	n_{1MAXDB} EL3,4,5,6 [rpm]	n_{1MAXZB} [rpm]	d_{MW} [mm]	J_1 [kgcm²]	m [kg]	C_2 [Nm/arcmin]	$\Delta\varphi_2$ [arcmin]	$\Delta\varphi_{2red}$ [arcmin]	M_{2N} [Nm]	M_{2acc} [Nm]	M_{2accHT} [Nm]	M_{2NOT} [Nm]
PH1031K ($M_{2acc,max}$ = 7500 Nm)															
229.9	470859/2048	PH1031_0060K613_0380 ME40	3000	2800	4500	≤48	34	140	1209	4.0	–	5000	7500	–	15000
229.9	470859/2048	PH1031_0060K613_0380 ME50	2500	2500	4000	≤60	63	148	1209	4.0	–	5000	7500	–	15000
286.4	119133/416	PH1031_0060K613_0480 ME20	3100	2800	4500	≤32	5.9	133	1209	4.0	–	5000	7500	–	14337
286.4	119133/416	PH1031_0060K613_0480 ME30	3100	2800	4500	≤38	11	135	1209	4.0	–	5000	7500	–	14337
382.3	391437/1024	PH1031_0060K613_0640 ME20	3100	2800	4500	≤32	5.2	133	1209	4.0	–	5000	7500	–	15000
382.3	391437/1024	PH1031_0060K613_0640 ME30	3100	2800	4500	≤38	10	135	1210	4.0	–	5000	7500	–	15000
456.8	380091/832	PH1031_0060K613_0760 ME20	3100	2800	4500	≤32	4.9	133	1210	4.0	–	5000	7500	–	15000
456.8	380091/832	PH1031_0060K613_0760 ME30	3100	2800	4500	≤38	10	135	1210	4.0	–	5000	7500	–	15000

13.3 Dimensional drawings

In this chapter, you can find the dimensions of the gear units as well as example dimensions of the mountable motor adapters.

Dimensions can exceed the specifications of ISO 2768-mK due to casting tolerances or accumulation of individual tolerances.

We reserve the right to make dimensional changes due to ongoing technical development.

You can download 3D models of our standard drives at http://configurator.stoeber.de.

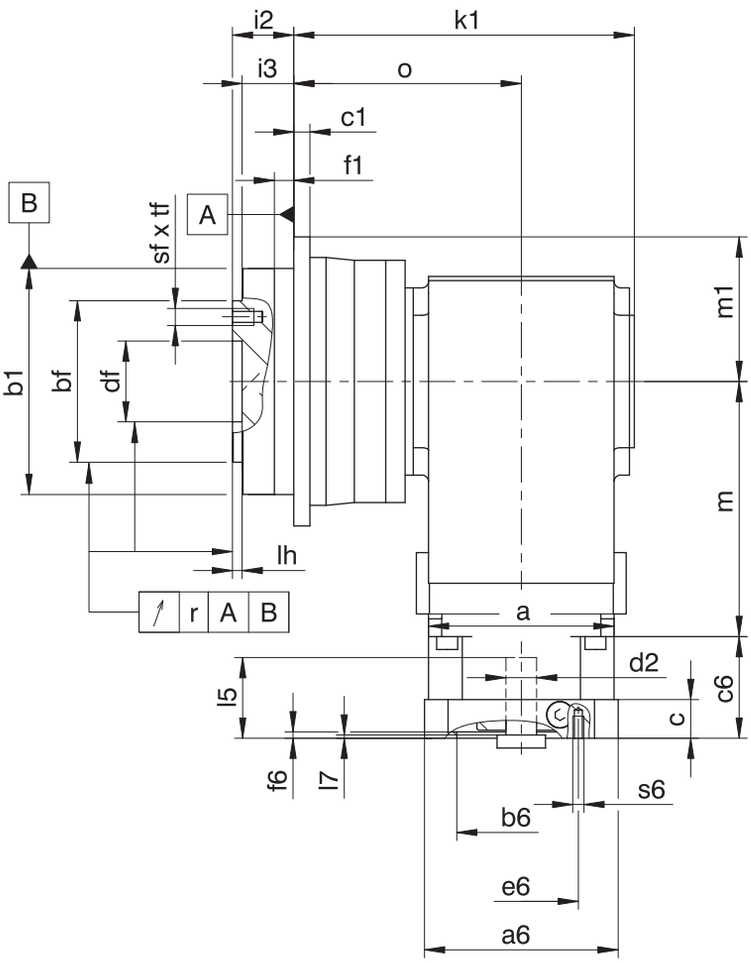

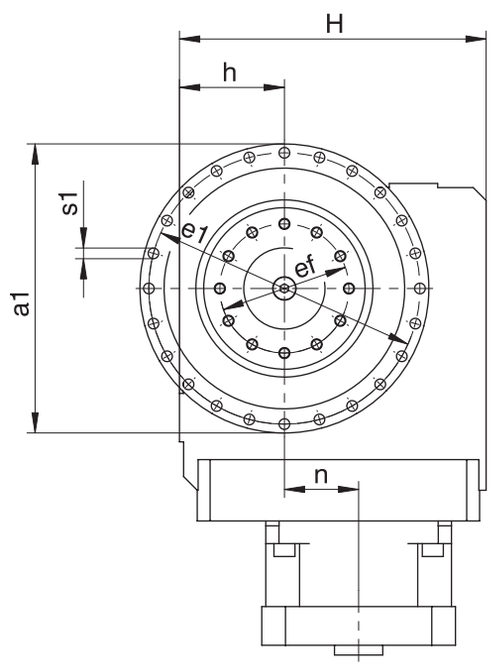

PH5

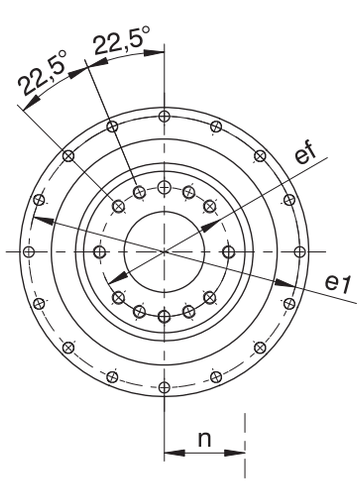

PH7/PH8

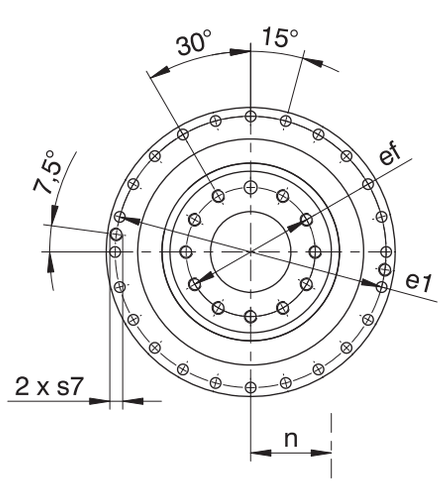

PH9/PH10

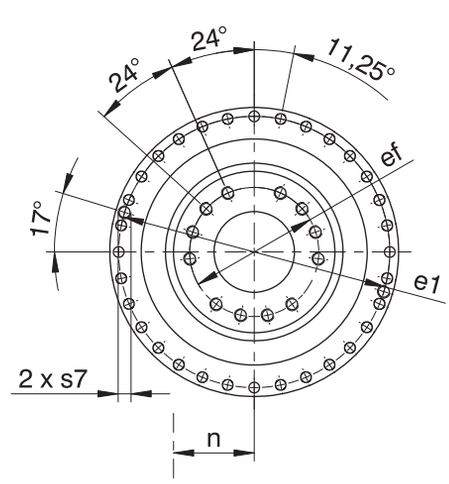

Dimensions of gear units

Type	Øa1	Øb1	Øbf	c1	Ødf	Øe1	Øef	f1	h	H	i2	i3	k1	lh	m1	o	r	Øs1	s7	sf	tf
PH531_K102_	145_{h7}	110_{h7}	80_{h7}	8	40^{H6}	135	63	12	60	160	29	23	180.0	6	72.5	124.0	0.020	5.5	–	M6	11
PH731_K102_	179_{h7}	140_{h7}	100_{h7}	10	50^{H6}	168	80	12	60	160	38	32	183.0	6	89.5	127.0	0.025	6.6	–	M8	14
PH731_K202_	179_{h7}	140_{h7}	100_{h7}	10	50^{H6}	168	80	12	65	190	38	32	211.0	6	89.5	141.0	0.025	6.6	–	M8	14
PH831_K202_	247_{h7}	200_{h7}	160_{h7}	12	80^{H6}	233	125	15	65	190	50	42	246.0	8	123.5	176.0	0.030	9.0	M10	M10	18
PH831_K302_	247_{h7}	200_{h7}	160_{h7}	12	80^{H6}	233	125	15	75	213	50	42	259.5	8	123.5	183.5	0.030	9.0	M10	M10	18
PH931_K513_	300	255_{h7}	180_{h7}	18	90^{H6}	280	140	20	160	260	66	55	292.5	12	150.0	196.5	0.030	13.5	M8	M16	24
PH1031_K613_	330	285_{h7}	200_{h7}	20	95^{H6}	310	160	20	190	310	75	60	318.5	10	165.0	215.0	0.040	13.5	M10	M20	30

Type	ME10			ME20			ME30			ME40			ME50		
	a	m	n	a	m	n	a	m	n	a	m	n	a	m	n
PH531_K102_	□98	124	36	□115	128	36	–	–	–	–	–	–	–	–	–
PH731_K102_	□98	124	36	□115	128	36	–	–	–	–	–	–	–	–	–
PH731_K202_	□98	143	46	□115	147	46	□145	149	46	–	–	–	–	–	–
PH831_K202_	□98	143	46	□115	147	46	□145	149	46	–	–	–	–	–	–
PH831_K302_	∅140	163	53	□115	167	53	□145	169	53	–	–	–	–	–	–
PH931_K513_	–	–	–	∅160	172	15	□145	174	15	□190	177	15	–	–	–
PH1031_K613_	–	–	–	∅160	191	18	∅200	193	18	□190	196	18	∅300	210	18

Example dimensions for the motor connection

Type	Øb6	Øe6	Ød2max	l5	□a6	c	c6	f6	l7	s6
PH_K_ME10	95^{H7}	115	19	41	100	21	61.0	4.0	3.0	M8
PH_K_ME20	110^{H7}	130	32	53	120	24	74.0	4.0	3.5	M8
PH_K_ME30	130^{H7}	165	38	62	150	26	86.0	5.5	4.5	M10
PH_K_ME40	180^{H7}	215	48	82	204	35	123.0	5.5	5.5	M12
PH_K_ME50	180^{H7}	215	60	86	230	43	124.5	6.0	5.0	M12

In the table above, you will find example dimensions for the motor connection for the ME motor adapter. **Note that when dimension c is lengthened (depending on the motor used), dimensions c6, l5 and lg are also lengthened accordingly.**

You will find additional motor connection dimensions for the ME motor adapter in our STOBER Configurator at http://configurator.stoeber.de. Here, you can directly download a 3D model of your drive.

13.4 Type designation

13.4.1 Type designation PH5K_ – PH8K_

In this chapter, you can find an explanation of the type designation with the associated options.

Additional ordering information not included in the type designation can be found at the end of the chapter.

Example code

PH	**7**	**3**	**1**	**S**	**F**	**S**	**S**	**0100**	**K102VF**	**0115**	**ME20**

Explanation

Code	Designation	Design
PH	Type	Planetary gear unit
7	Size	7 (example)
3	Generation	Generation 3
1	Stages	Single-stage
S	Housing	Standard
F	Shaft	Flange shaft
S V	Bearing	Standard bearing Reinforced bearing (PH3 – PH5)
S R	Backlash	Standard Reduced
0100	Transmission ratio of output (i x 10)	i = 10 (example)
K102VF	Input	K1 right-angle geared motor (example)
0115	Transmission ratio of input (i x 10 rounded)	i = 11.57 (example)
ME20 MQ MB[1]	Motor adapter	ME20 motor adapter (example) with EasyAdapt coupling Square motor adapter with backlash-free plug-in coupling ServoStop motor adapter with brake

In order to complete the type designation, also specify:

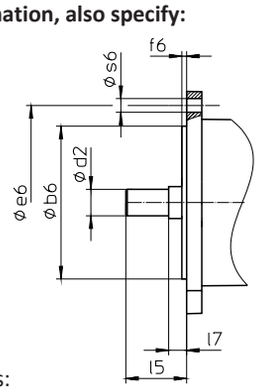

- Motor type or motor dimensions:

  To choose a suitable motor connection, use the STOBER Configurator at http://configurator.stoeber.de and choose your motor or the dimensions of the motor connection.
- Mounting position, see the chapter [▸ 13.5.5]
- The position of locking screw access, see the chapter [▸ 13.5.7]
- Output gear unit side 3 or 4, see the chapter [▸ 13.5.5]
- Radial shaft seal rings at the output made of NBR or FKM (option), see the chapter [▸ 13.6.4]
- Reverse operation of the output shaft from ±20° to ±90° and horizontal installation, note the chapter [▸ 13.6.5]
- Pinion lock for motor adapter (optional)
- Double seal for ME motor adapter (optional)

[1] You can find more details in the catalog for ServoStop servo gear unit with brake ID 443234.

13.4.2 Type designation PH9K_ – PH10K_

In this chapter, you can find an explanation of the type designation with the associated options.

Additional ordering information not included in the type designation can be found at the end of the chapter.

Example code

PH	9	3	1	F	0040	K513VF	0100	ME30

Explanation

Code	Designation	Design
PH	Type	Planetary gear unit
9	Size	9 (example)
3	Generation	Generation 3
1	Stages	Single-stage
F	Shaft	Flange shaft
0040	Transmission ratio of output (i x 10)	i = 4 (example)
K513VF	Input	K5 right-angle gear unit (example)
0100	Transmission ratio of input (i x 10)	i = 10 (example)
ME30 MQ MB[2]	Motor adapter	ME30 motor adapter (example) with EasyAdapt coupling Square motor adapter with backlash-free plug-in coupling ServoStop motor adapter with brake

In order to complete the type designation, also specify:

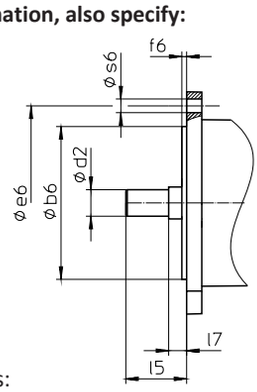

- Motor type or motor dimensions:

  To choose a suitable motor connection, use the STOBER Configurator at http://configurator.stoeber.de and choose your motor or the dimensions of the motor connection.
- Mounting position, see the chapter [▸ 13.5.5]
- The position of locking screw access, see the chapter [▸ 13.5.7]
- Output gear unit side 3 or 4, see the chapter [▸ 13.5.5]
- Radial shaft seal rings at the output made of NBR or FKM (option), see the chapter [▸ 13.6.4]
- Reverse operation of the output shaft from ±20° to ±90° and horizontal installation, note the chapter [▸ 13.6.5]
- Pinion lock for motor adapter (optional)
- Double seal for ME motor adapter (optional)

[2] You can find more details in the catalog for ServoStop servo gear unit with brake ID 443234.

13.4.3 Nameplate

An example gear unit nameplate is explained in the figure below.

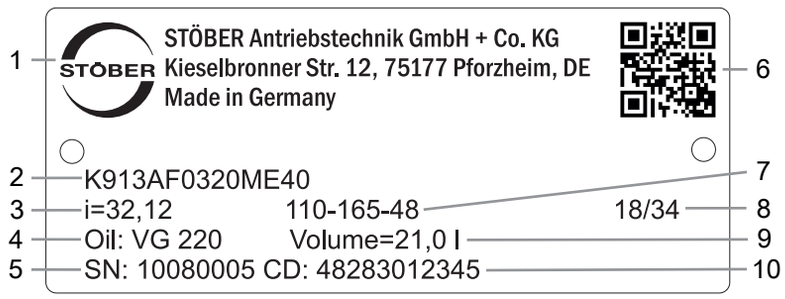

Code	Designation
1	Name of manufacturer
2	Type designation
3	Gear ratio of the gear unit
4	Lubricant specification
5	Serial number of the gear unit
6	QR code (link to product information)
7	Dimensions of the motor adapter (pilot/bolt circle/motor shaft diameter)
8	Date of manufacture (year/calendar week)
9	Lubricant fill volume
10	Customer-specific data

13.5 Product description

13.5.1 Input options

ME motor adapter for attaching synchronous servo motors

http://www.stoeber.de/en/PHKME

MB motor adapter with brake for attaching synchronous servo motors

http://www.stoeber.de/en/PHKMB

EZ synchronous servo motor

http://www.stoeber.de/en/PHKEZ

13.5.2 Motor adapter with EasyAdapt coupling (ME)

In this chapter, you will find a description of the EasyAdapt coupling.

Properties:

- Fast and easy motor attachment
- Rugged clamp coupling with expanding function
- Lowest mass moments of inertia for the highest dynamics
- Balanced for smooth running without vibration, even at high speeds
- Large motor shaft diameter range
- Error-free, thanks to exact centering of the motor

Fig. 1: EasyAdapt coupling

13.5.3 Square motor adapter with backlash-free plug-in coupling (MQ)

In this chapter, you will find a description of the backlash-free plug-in coupling (jaw coupling).

Properties:

- Fast and easy motor attachment
- Removal of the motor possible in any position
- With integrated thermal length compensation, compensates for linear expansion of the motor shaft
- Motor shaft decoupled from axial forces
- Balanced for smooth running without vibration, even at high speeds
- Large motor shaft diameter range
- Error-free, thanks to exact centering of the motor

Fig. 2: Backlash-free plug-in coupling

For all technical data and combinations with our gear units, refer to http://configurator.stoeber.de.

13.5.4 Installation conditions

The torque and force values listed in this catalog are valid under the following conditions:

- When the flange shaft and gear housing are fastened on the machine side using screws of strength class 12.9
- When the gear housings are adjusted at pilot øb1. The machine-side fit must be H7.
- When the flange shaft is adjusted using the connecting element at pilot øbf or ødf

13.5.5 Mounting positions

The following table shows the standard mounting positions.

The numbers identify the gear unit sides. The mounting position is defined by the gear side facing downwards.

PH5K1 – PH8K3

EL1	EL2	EL3
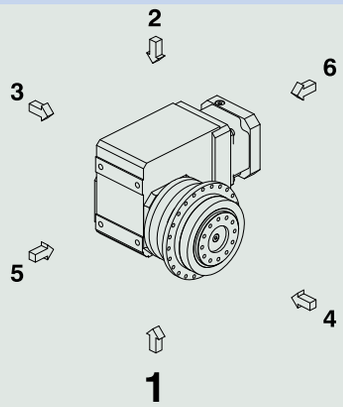	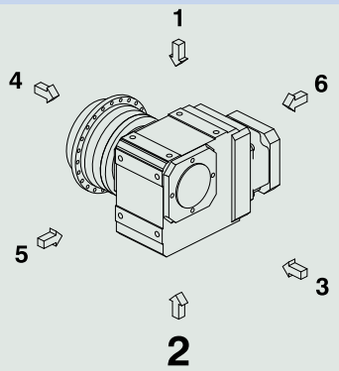	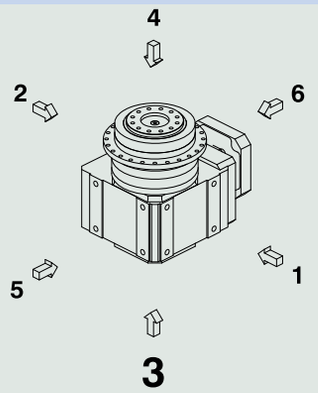
EL4	**EL5**	**EL6**
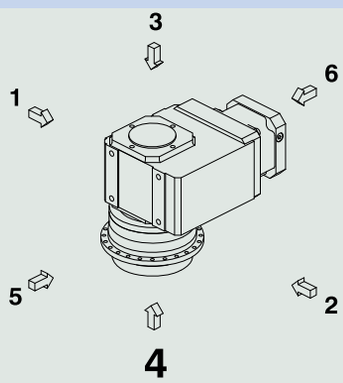	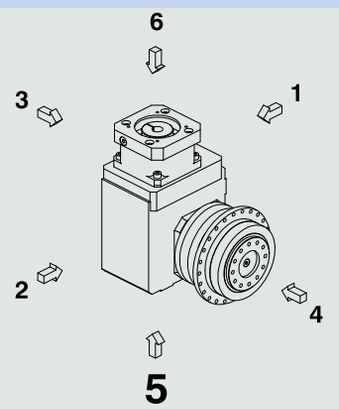	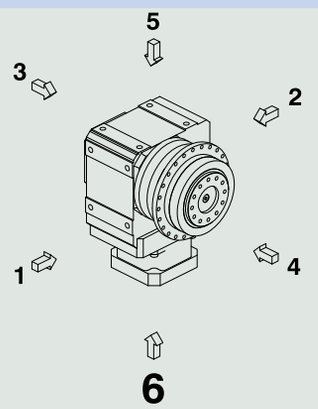

PH9K5 – PH10K6

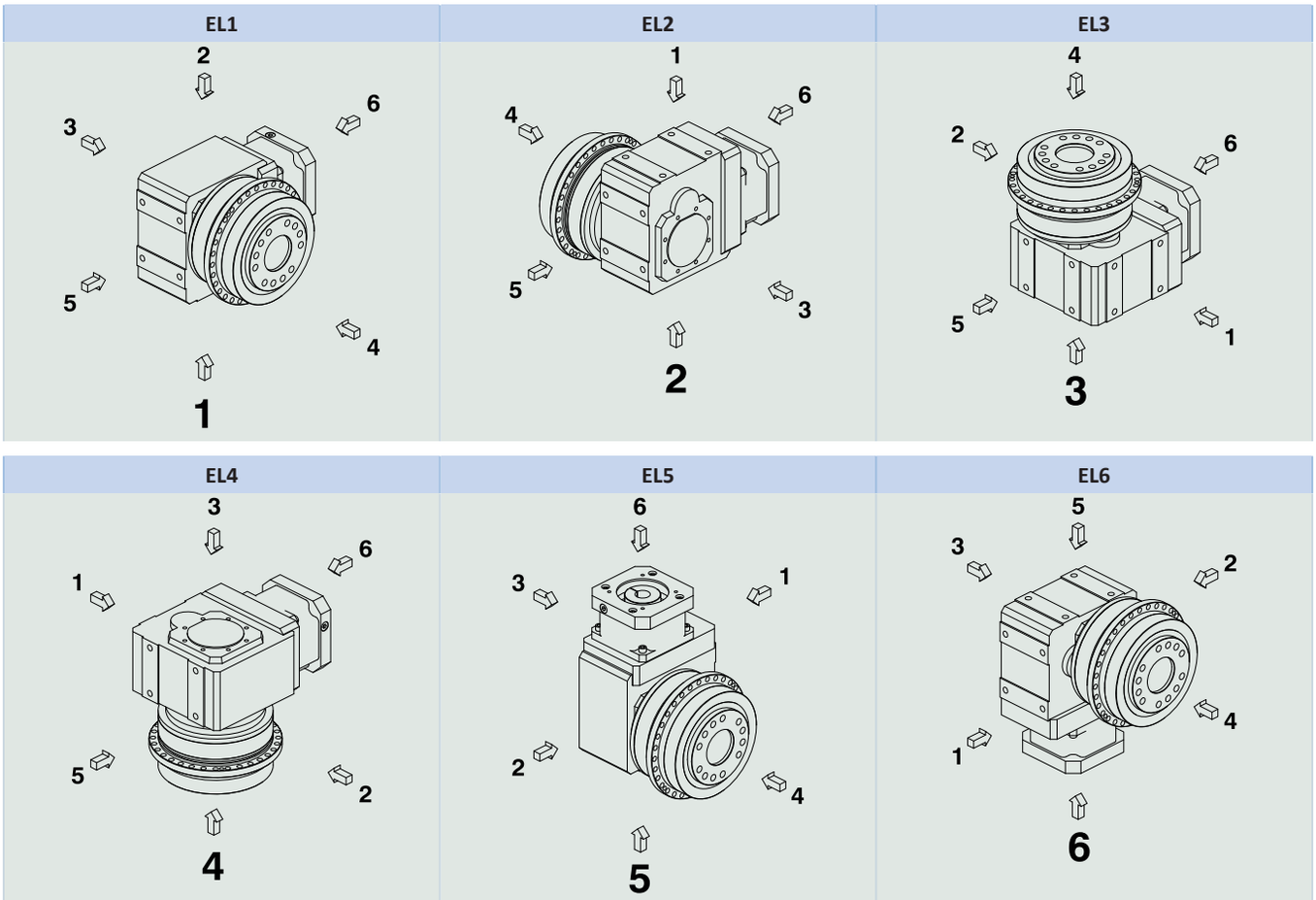

Since the lubricant filling volume of the gear unit depends on the mounting position, the mounting position must be specified when ordering.

13.5.6 Lubricants

STOBER fills the gear units with the amount and type of lubricant specified on the nameplate. The filling volume and the structure of the gear units depend on the mounting position.

Only install the gear units in the intended mounting position! Reposition the gear units only after consulting STOBER. Otherwise, STOBER assumes no liability for the gear units.

You will receive lubricants for use in the food industry upon request.

13.5.7 Position of locking screw access

Mounting position EL1	Mounting position EL4
Locking screw in 270° position (standard)	Locking screw in 270° position (standard)
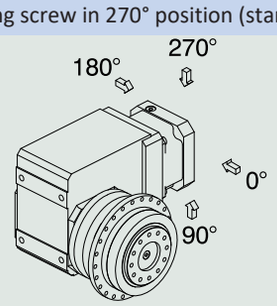	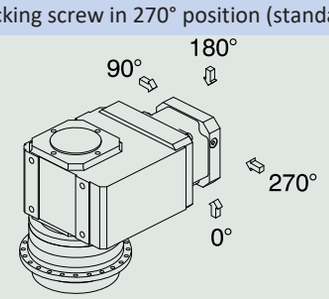

Indicate variations for your gear unit in the order.

Note that the access hole for the locking screw also rotates when the gear unit is rotated to another mounting position.

13.5.8 Other product features

Feature	Value
Max. permitted gear unit temperature (on the surface of the gear unit)	≤ 90 °C
Paint	Black RAL 9005
Explosion-proof design in accordance with (ATEX) Directive 2014/34/EU (optional)	Available, see Document ID 441677_en
Efficiency: η_{get} three-stage η_{get} four-stage	 93% 92%
Protection class: [3]	IP65

13.5.9 Direction of rotation

Output side 4	Output side 3
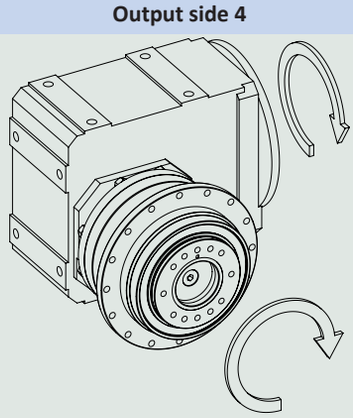	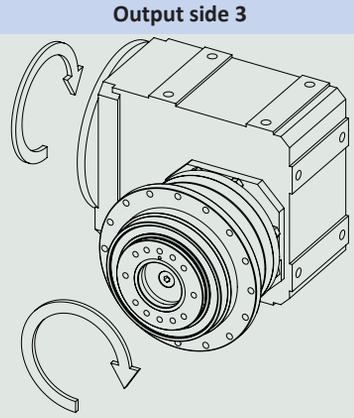

The pictures show mounting position EL1.

13.6 Project configuration

Project your drives using our SERVOsoft designing software. Download SERVOsoft for free at https://www.stoeber.de/en/ServoSoft.

Observe the limit conditions in this chapter to ensure a safe design for your drives.

An explanation of the formula symbols can be found in the chapter [▸ 18.1].

[3] Observe the protection class of all the components.

13.6.1 Drive selection

The formula symbols for values actually present in the application are marked with *.

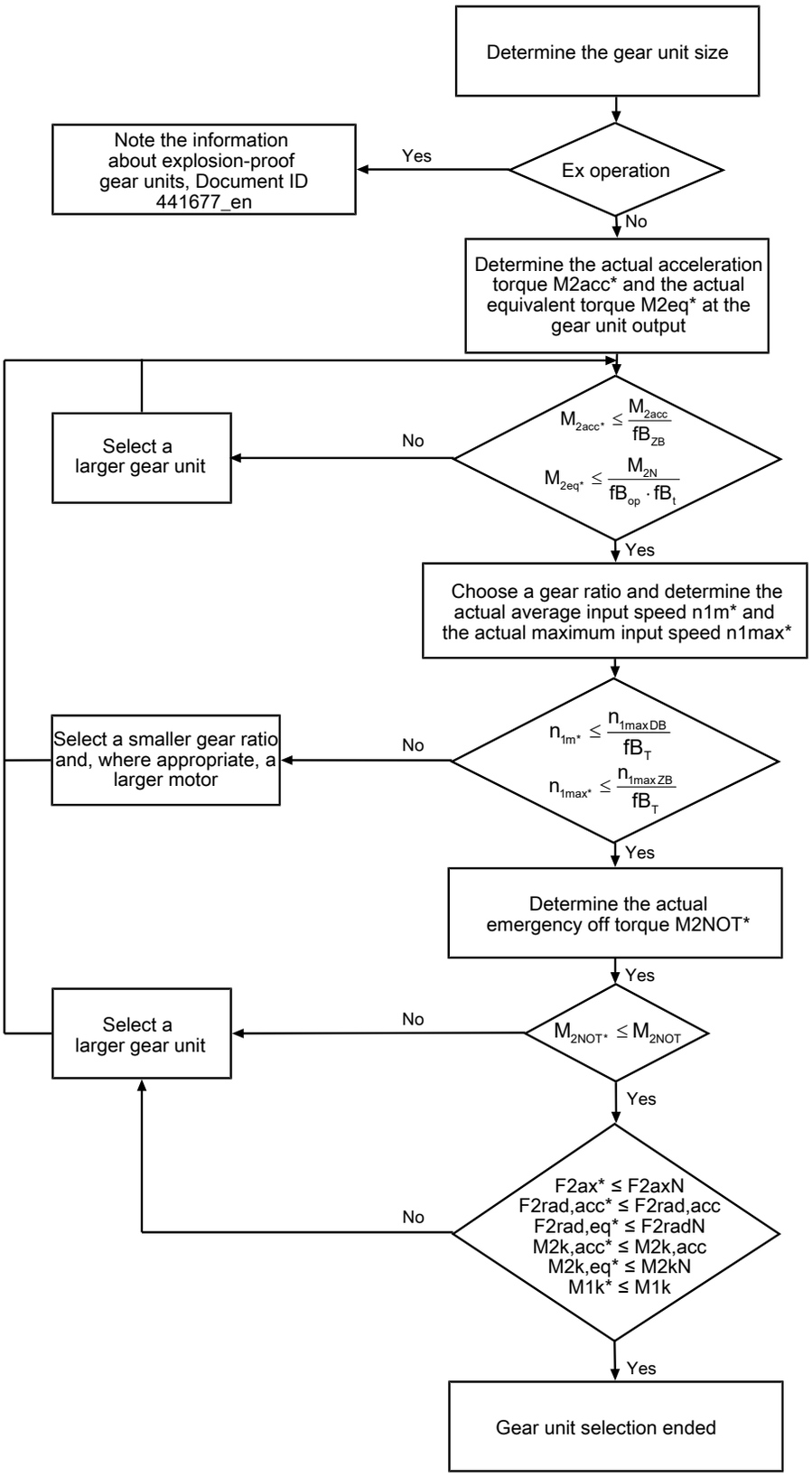

Calculate the forces and tilting torques in the chapter Permitted shaft loads.

Refer to the selection tables for the values for i, n_{1maxDB}, n_{1maxZB}, M_{2acc} (M_{2accHT} for reduced backlash), M_{2NOT} and M_{2N}.

The values for fB_T, fB_{op}, fB_t and fB_{ZB} can be found in the corresponding tables in this chapter.

Example of cyclic operation

The following calculations are based on a representation of the power taken from the output based in accordance with the following example:

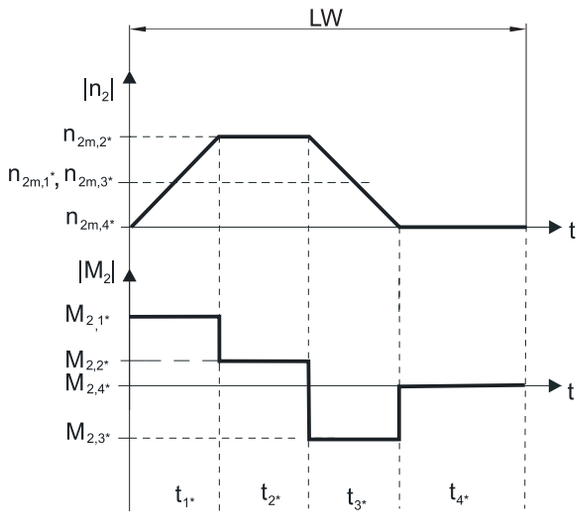

Calculation of the actual maximum acceleration torque

$$M_{2acc*} = J_{tot} \cdot \frac{\Delta n_2}{9.55 \cdot \Delta t} + M_{L*}$$

Calculation of the actual average input speed

$$n_{1m*} = n_{2m*} \cdot i$$

$$n_{2m*} = \frac{|n_{2m,1*}| \cdot t_{1*} + \ldots + |n_{2m,n*}| \cdot t_{n*}}{t_{1*} + \ldots + t_{n*}}$$

If $t_{1*} + \ldots + t_{3*} \geq 6$ min, calculate n_{2m*} without the rest phase t_{4*}.

The values for the ratio i can be found in the selection tables.

Calculation of the actual emergency-off torque

$$M_{2NOT*} = J_{tot} \cdot \frac{\Delta n_2}{9.55 \cdot \Delta t} + M_{L*}$$

Calculation of the actual equivalent torque

$$M_{2eq*} = \sqrt[3]{\frac{|n_{2m,1*}| \cdot t_{1*} \cdot |M_{2,1*}{}^3| + \ldots + |n_{2m,n*}| \cdot t_{n*} \cdot |M_{2,n*}{}^3|}{|n_{2m,1*}| \cdot t_{1*} + \ldots + |n_{2m,n*}| \cdot t_{n*}}}$$

Operating factors

Operating mode	fB_{op}
Uniform continuous operation	1.00
Cyclic operation	1.25
Reversing load cyclic operation	1.40

Run time	fB_t
Daily runtime ≤ 8 h	1.00
Daily runtime ≤ 16 h	1.15
Daily runtime ≤ 24 h	1.20

Cyclic operation	fB_{ZB}
≤ 1000 load changes/hour (LW/h)	1.00
> 1000 load changes/hour (LW/h)	1.15

Temperature		fB_T
Motor cooling	**Surrounding temperature**	
Motor with forced ventilation	≤ 20 °C	0.9
	≤ 30 °C	1.0
	≤ 40 °C	1.15
Motor with convection cooling	≤ 20 °C	1.0
	≤ 30 °C	1.1
	≤ 40 °C	1.25

Notes

- The maximum permitted gear unit temperature of ≤ 90 °C must not be exceeded. Doing so may result in damage to the gear unit.

13.6.2 Permitted shaft loads for the output shaft

The values specified in the tables apply to the permitted shaft loads:

- For shaft dimensions in accordance with the catalog
- For output speeds n_{2m*} ≤ 100 rpm ($F^{2axN} = F_{2ax100}$; $F_{2radN} = F_{2rad100}$; $M_{2kN} = M_{2k100}$)
- Only if radial forces on the gear unit are stabilized by its pilots (housing, flange shaft)

Permitted shaft loads for standard bearing S

Type	z_2 [mm]	F_{2ax100} [N]	$F_{2rad100}$ [N]	$F_{2rad,acc}$ [N]	M_{2k100} [Nm]	$M_{2k,acc}$ [Nm]	C_{2k} [Nm/arcmin]
PH3	62.5	1650	1613	1613	101	101	75
PH4	83.0	2150	3095	3571	257	296	192
PH5	97.0	4150	4536	4897	440	475	429
PH7	86.0	6150	17045	17045	1466	1466	500
PH8	125.5	10050	27778	27778	3486	3486	1550
PH9	155.0	33000	48387	70968	7500	11000	7500
PH10	171.0	50000	51462	73099	8800	12500	9500

Permitted shaft loads for reinforced bearing V

Type	z_2 [mm]	F_{2ax100} [N]	$F_{2rad100}$ [N]	$F_{2rad,acc}$ [N]	M_{2k100} [Nm]	$M_{2k,acc}$ [Nm]	C_{2k} [Nm/arcmin]
PH3	66.5	2200	2250	2250	150	150	80
PH4	88.5	2900	4000	4000	354	354	217
PH5	104.0	5000	5500	5500	572	572	478

For other output speeds, download diagrams at http://configurator.stoeber.de.

The following applies to output speeds n_{2m*} > 100 rpm:

$$F_{2axN} = \frac{F_{2ax100}}{\sqrt[3]{\frac{n_{2m*}}{100\ \text{rpm}}}} \qquad F_{2radN} = \frac{F_{2rad100}}{\sqrt[3]{\frac{n_{2m*}}{100\ \text{rpm}}}} \qquad M_{2kN} = \frac{M_{2k100}}{\sqrt[3]{\frac{n_{2m*}}{100\ \text{rpm}}}}$$

The values for F_{2ax100}, $F_{2rad100}$ and M_{2k100} can be found in the table "Permitted shaft loads" in this chapter.

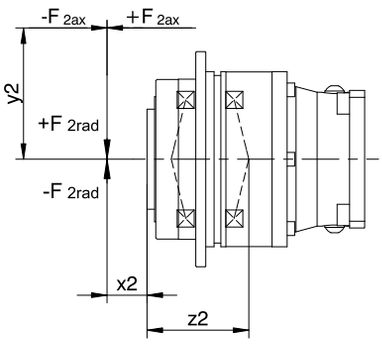

Fig. 3: Force application points

You can determine the permitted radial forces from the permitted breakdown torque M_{2kN} and $M_{2k,acc}$. The actual radial forces may not exceed the permitted radial forces. The permitted radial forces pertain to the shaft end (x2 = 0).

$$M_{2k,acc*} = \frac{2 \cdot F_{2ax*} \cdot y_2 + F_{2rad,acc*} \cdot (x_2 + z_2)}{1000} \leq M_{2k,acc}$$

For applications with multiple axial and/or radial forces, you must add the forces as vectors.

In the event of EMERGENCY OFF operation (max. 1000 load changes), you can multiply the permitted forces and torques for F_{2ax100}, $F_{2rad100}$ and M_{2k100} by a factor of two.

Also note the calculation for equivalent values:

$$M_{2k,eq*} = \sqrt[3]{\frac{|n_{2m,1*}| \cdot t_{1*} \cdot |M_{2k,acc,1*}{}^3| + \ldots + |n_{2m,n*}| \cdot t_{n*} \cdot |M_{2k,acc,n*}{}^3|}{|n_{2m,1*}| \cdot t_{1*} + \ldots + |n_{2m,n*}| \cdot t_{n*}}} \leq M_{2kN}$$

$$F_{2rad,eq*} = \sqrt[3]{\frac{|n_{2m,1*}| \cdot t_{1*} \cdot |F_{2rad,acc,1*}{}^3| + \ldots + |n_{2m,n*}| \cdot t_{n*} \cdot |F_{2rad,acc,n*}{}^3|}{|n_{2m,1*}| \cdot t_{1*} + \ldots + |n_{2m,n*}| \cdot t_{n*}}} \leq F_{2radN}$$

$$F_{2ax,eq*} \leq F_{2axN}$$

The following apply to the bearing service life L_{10h} ($ED_{10} \leq 40\%$):

$L_{10h} > 10000$ h with $1 < M_{2kN}/M_{2k*} < 1.25$

$L_{10h} > 20000$ h with $1.25 < M_{2kN}/M_{2k*} < 1.5$

$L_{10h} > 30000$ h with $1.5 < M_{2kN}/M_{2k*}$

For different duty cycles:

$$L_{10h} > L_{10h(ED_{10}=40\%)} \cdot \frac{40\%}{ED_{10}}$$

13.6.3 Permitted breakdown torques at the gear unit input

For a horizontal mounting position of the motor, verify that the permitted breakdown torque at the gear unit input is not exceeded before installation on a STOBER gear unit. You can find information for how to do that in this chapter.

Calculate the actual breakdown torque as follows:

$M_{1k*} = F_{1k*} \bullet l_{sp} \leq M_{1k}$

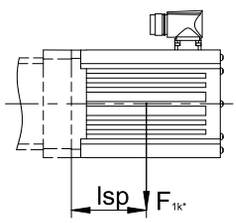

Type	M_{1k} [Nm]
ME10	25
ME20	60
ME30	125
ME40	250
ME50	600

13.6.4 Recommendation for radial shaft seal rings

For a duty cycle > 60% and higher surrounding temperatures, we recommend radial shaft seal rings made of FKM at the output.

Properties:

- Excellent temperature resistance
- High chemical stability
- Very good resistance to aging
- Excellent resistance in oils and greases
- For use in the food, beverage and pharmaceutical industries

Leak-proofness

Our gear units are equipped with high-quality radial shaft seal rings and checked for leaks. However, a leak cannot be fully ruled out over the length of use of a gear unit. If you use a gear unit with goods incompatible with the lubricant, you must take measures to prevent direct contact with the gear unit lubricant in case of a leak.

13.6.5 Reverse operation

To ensure lubrication for circulating gearing parts during cyclic reverse operation from ± 20° to ± 90° at the output, pay careful attention to the position of the output shaft for the horizontal mounting of the gear unit, as shown in the diagrams below.

The images show the center position of reverse operation.

Cyclic reverse operation ≤ ± 20° on request.

Size 3 – 10

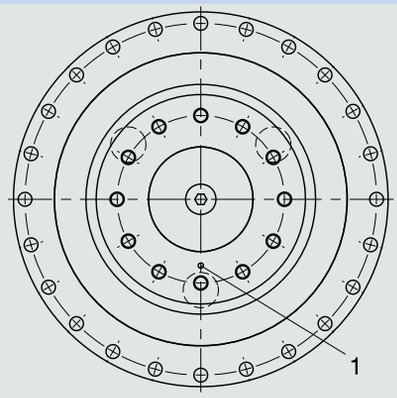

1 Position of the mark: bottom

Please note that the hole pattern may be different, depending on the size of the planetary gear unit.

13.7 Additional documentation

Additional documentation related to the product can be found at
http://www.stoeber.de/en/downloads/

Enter the ID of the documentation in the Search... field.

Documentation	ID
Operating manual for KL/KS/PHK/PHKX/PHQK/PK/PKX right-angle servo gear units and right-angle servo geared motors	443150_en
Operating manual for explosion-proof KL/KS/PHK/PHKX/PHQK/PK/PKX right-angle gear units	443005_en
Information explosion-proof gear units	441677_en

14 PHQK right-angle planetary gear units

Table of contents

14.1 Overview ... 290

14.2 Selection tables ... 291

14.3 Dimensional drawings ... 298

14.3.1 PHQ5K – PHQ10K F shaft design (flange shaft) ... 298

14.3.2 PHQ11K – PHQ12K F shaft design (flange shaft) ... 300

14.4 Type designation ... 302

14.4.1 Type designation PHQ5K_ – PHQ8K_ ... 302

14.4.2 Type designation PHQ9K_ – PHQ12K_ ... 303

14.4.3 Nameplate ... 304

14.5 Product description ... 304

14.5.1 Input options ... 304

14.5.2 Motor adapter with EasyAdapt coupling (ME) ... 305

14.5.3 Square motor adapter with backlash-free plug-in coupling (MQ) ... 305

14.5.4 Installation conditions ... 305

14.5.5 Mounting positions ... 306

14.5.6 Lubricants ... 307

14.5.7 Position of locking screw access ... 307

14.5.8 Other product features ... 308

14.5.9 Direction of rotation ... 308

14.6 Project configuration ... 308

14.6.1 Drive selection ... 309

14.6.2 Permitted shaft loads for the output shaft ... 311

14.6.3 Permitted breakdown torques at the gear unit input ... 313

14.6.4 Recommendation for radial shaft seal rings ... 313

14.6.5 Reverse operation ... 314

14.7 Additional documentation ... 314

14 PHQK right-angle planetary gear units

14.1 Overview

Quattro-Power precision right-angle planetary geared motors

Features

Power density	★★★★★
Backlash	★★★★★
Price category	€€€€€
Shaft load	★★★★★
Smooth operation	★★★☆☆
Torsional stiffness	★★★★★
Mass moment of inertia	★★★★☆
Helical gearing	✓
Maintenance-free	✓
High power density	✓
Continuous operation without cooling	✓
Stiff output bearings due to pretension	✓
Reinforced output bearing (PHQ4 – PHQ5)	✓ (optional)
Easy and reliable attachment to any synchronous servo motor	✓

Key ★☆☆☆☆ good | ★★★★★ excellent
€ Economy | €€€€€ Premium

Technical data

i	22 – 2242
M_{2acc}	316 – 43000 Nm
$\Delta\phi_2$	1.5 – 4 arcmin
η_{get}	90 – 93 %

14.2 Selection tables

The technical data specified in the selection tables applies to:

- Installation altitudes up to 1000 m above sea level
- Surrounding temperatures from 0 °C to 40 °C
- Without consideration for thermal limiting performance

You can find the mass moment of inertia J_1 for smaller motor shaft diameters and all other technical data at http://configurator.stoeber.de.

An explanation of the formula symbols can be found in the chapter [▸ 18.1].

i	i_{exakt}	Type	n_{1MAXDB} EL1,2 [rpm]	n_{1MAXDB} EL3,4,5,6 [rpm]	n_{1MAXZB} [rpm]	d_{MW} [mm]	J_1 [kgcm²]	m [kg]	C_2 [Nm/arcmin]	$\Delta\varphi_2$ [arcmin]	$\Delta\varphi_{2red}$ [arcmin]	M_{2N} [Nm]	M_{2acc} [Nm]	M_{2accHT} [Nm]	M_{2NOT} [Nm]
PHQ531K ($M_{2acc,max}$ = 550 Nm)															
22.00	22/1	PHQ531_0055K102_0040 ME10	3300	2800	5000	≤19	1.5	17	69	4.0	2.0	280	492	492	667
22.00	22/1	PHQ531_0055K102_0040 ME20	3300	2800	5000	≤24	3.4	18	70	4.0	2.0	280	492	492	667
30.62	8360/273	PHQ531_0055K102_0056 ME10	3300	2800	5000	≤19	1.3	17	70	4.0	2.0	280	550	550	929
30.62	8360/273	PHQ531_0055K102_0056 ME20	3300	2800	5000	≤24	3.2	18	70	4.0	2.0	280	550	550	929
33.00	33/1	PHQ531_0055K102_0060 ME10	3300	2800	5000	≤19	1.1	17	70	4.0	2.0	280	550	550	948
33.00	33/1	PHQ531_0055K102_0060 ME20	3300	2800	5000	≤24	3.0	18	70	4.0	2.0	280	550	550	948
36.54	3289/90	PHQ531_0055K102_0066 ME10	3600	3300	5500	≤19	1.1	17	70	4.0	2.0	280	550	550	948
36.54	3289/90	PHQ531_0055K102_0066 ME20	3600	3300	5500	≤24	2.9	18	70	4.0	2.0	280	550	550	948
45.70	21021/460	PHQ531_0055K102_0083 ME10	3600	3300	5500	≤19	0.93	17	70	4.0	2.0	280	550	550	948
45.70	21021/460	PHQ531_0055K102_0083 ME20	3600	3300	5500	≤24	2.8	18	70	4.0	2.0	280	550	550	948
50.87	9614/189	PHQ531_0055K102_0092 ME10	3600	3300	5500	≤19	0.97	17	70	4.0	2.0	280	550	550	948
50.87	9614/189	PHQ531_0055K102_0092 ME20	3600	3300	5500	≤24	2.9	18	70	4.0	2.0	280	550	550	948
55.77	5577/100	PHQ531_0055K102_0100 ME10	4000	3800	6000	≤19	0.85	17	70	4.0	2.0	280	550	550	948
55.77	5577/100	PHQ531_0055K102_0100 ME20	3700	3700	6000	≤24	2.7	18	70	4.0	2.0	280	550	550	948
63.61	1463/23	PHQ531_0055K102_0115 ME10	3600	3300	5500	≤19	0.88	17	70	4.0	2.0	280	550	550	948
63.61	1463/23	PHQ531_0055K102_0115 ME20	3600	3300	5500	≤24	2.8	18	70	4.0	2.0	280	550	550	948
69.40	4719/68	PHQ531_0055K102_0125 ME10	4000	3800	6000	≤19	0.79	17	70	4.0	2.0	280	550	550	948
69.40	4719/68	PHQ531_0055K102_0125 ME20	3700	3700	6000	≤24	2.7	18	70	4.0	2.0	280	550	550	948
77.63	2717/35	PHQ531_0055K102_0140 ME10	4000	3800	6000	≤19	0.82	17	70	4.0	2.0	280	550	550	948
77.63	2717/35	PHQ531_0055K102_0140 ME20	3700	3700	6000	≤24	2.7	18	70	4.0	2.0	280	550	550	948
91.93	1287/14	PHQ531_0055K102_0165 ME10	4000	4000	7000	≤19	0.73	17	70	4.0	2.0	280	550	550	948
91.93	1287/14	PHQ531_0055K102_0165 ME20	3700	3700	6000	≤24	2.6	18	70	4.0	2.0	280	550	550	948
96.60	11495/119	PHQ531_0055K102_0175 ME10	4000	3800	6000	≤19	0.77	17	70	4.0	2.0	280	550	550	948
96.60	11495/119	PHQ531_0055K102_0175 ME20	3700	3700	6000	≤24	2.7	18	70	4.0	2.0	280	550	550	948
110.8	4433/40	PHQ531_0055K102_0200 ME10	4000	4000	7000	≤19	0.71	17	70	4.0	2.0	280	550	550	948
110.8	4433/40	PHQ531_0055K102_0200 ME20	3700	3700	6000	≤24	2.6	18	70	4.0	2.0	280	550	550	948
128.0	6270/49	PHQ531_0055K102_0230 ME10	4000	4000	7000	≤19	0.72	17	70	4.0	2.0	280	550	550	948
128.0	6270/49	PHQ531_0055K102_0230 ME20	3700	3700	6000	≤24	2.6	18	70	4.0	2.0	280	550	550	948
138.7	13871/100	PHQ531_0055K102_0250 ME10	4000	4000	7000	≤19	0.68	17	70	4.0	2.0	280	550	550	948
138.7	13871/100	PHQ531_0055K102_0250 ME20	3700	3700	6000	≤24	2.6	18	70	4.0	2.0	280	550	550	948
154.3	6479/42	PHQ531_0055K102_0280 ME10	4000	4000	7000	≤19	0.70	17	70	4.0	2.0	280	550	550	948
154.3	6479/42	PHQ531_0055K102_0280 ME20	3700	3700	6000	≤24	2.6	18	70	4.0	2.0	280	550	550	948
185.4	51909/280	PHQ531_0055K102_0340 ME10	4000	4000	7000	≤19	0.63	17	70	4.0	2.0	280	462	462	836
193.1	20273/105	PHQ531_0055K102_0350 ME10	4000	4000	7000	≤19	0.68	17	70	4.0	2.0	280	550	550	948
193.1	20273/105	PHQ531_0055K102_0350 ME20	3700	3700	6000	≤24	2.6	18	70	4.0	2.0	280	550	550	948
221.7	4433/20	PHQ531_0055K102_0400 ME10	4000	4000	7000	≤19	0.62	17	70	4.0	2.0	280	389	389	704
258.0	25289/98	PHQ531_0055K102_0470 ME10	4000	4000	7000	≤19	0.63	17	70	4.0	2.0	280	550	550	948
276.7	55341/200	PHQ531_0055K102_0500 ME10	4000	4000	7000	≤19	0.62	17	70	4.0	2.0	264	316	316	572
308.5	6479/21	PHQ531_0055K102_0560 ME10	4000	4000	7000	≤19	0.62	17	70	4.0	2.0	280	542	542	948
385.2	26961/70	PHQ531_0055K102_0700 ME10	4000	4000	7000	≤19	0.62	17	70	4.0	2.0	280	440	440	797
PHQ731K ($M_{2acc,max}$ = 1050 Nm)															
22.00	22/1	PHQ731_0055K202_0040 ME20	3000	2600	4500	≤32	6.6	31	134	4.0	2.0	500	921	921	1667
22.00	22/1	PHQ731_0055K202_0040 ME30	3000	2600	4500	≤38	12	33	135	4.0	2.0	500	921	921	1667
24.00	24/1	PHQ731_0055K202_0044 ME10	3000	2600	4500	≤19	2.8	30	131	4.0	2.0	500	536	536	727
24.00	24/1	PHQ731_0055K202_0044 ME20	3000	2600	4500	≤32	6.2	31	135	4.0	2.0	500	948	948	1819
24.00	24/1	PHQ731_0055K202_0044 ME30	3000	2600	4500	≤38	12	33	135	4.0	2.0	500	948	948	1819
28.47	2107/74	PHQ731_0055K202_0052 ME20	3000	2600	4500	≤32	5.7	31	135	4.0	2.0	500	1004	1004	2100
28.47	2107/74	PHQ731_0055K202_0052 ME30	3000	2600	4500	≤38	11	33	135	4.0	2.0	500	1004	1004	2100
33.00	33/1	PHQ731_0055K202_0060 ME10	3000	2600	4500	≤19	2.4	30	133	4.0	2.0	500	737	737	1000
33.00	33/1	PHQ731_0055K202_0060 ME20	3000	2600	4500	≤32	5.8	31	135	4.0	2.0	500	1050	1050	2100
33.00	33/1	PHQ731_0055K202_0060 ME30	3000	2600	4500	≤38	11	33	135	4.0	2.0	500	1050	1050	2100
36.76	2279/62	PHQ731_0055K202_0067 ME10	3500	3100	5000	≤19	1.8	30	134	4.0	2.0	500	822	822	1115

i	i_{exakt}	Type	n_{1MAXDB} EL1,2 [rpm]	n_{1MAXDB} EL3,4,5,6 [rpm]	n_{1MAXZB} [rpm]	d_{MW} [mm]	J_1 [kgcm²]	m [kg]	C_2 [Nm/arcmin]	$\Delta\varphi_2$ [arcmin]	$\Delta\varphi_{2red}$ [arcmin]	M_{2N} [Nm]	M_{2acc} [Nm]	M_{2accHT} [Nm]	M_{2NOT} [Nm]
PHQ731K ($M_{2acc,max}$ = 1050 Nm)															
36.76	2279/62	PHQ731_0055K202_0067 ME20	3500	3100	5000	≤32	5.2	31	135	4.0	2.0	500	1050	1050	2100
36.76	2279/62	PHQ731_0055K202_0067 ME30	3500	3100	5000	≤38	10	33	136	4.0	2.0	500	1050	1050	2100
39.15	23177/592	PHQ731_0055K202_0071 ME20	3000	2600	4500	≤32	5.4	31	135	4.0	2.0	500	1050	1050	2100
39.15	23177/592	PHQ731_0055K202_0071 ME30	3000	2600	4500	≤38	11	33	136	4.0	2.0	500	1050	1050	2100
46.18	1247/27	PHQ731_0055K202_0084 ME10	3500	3100	5000	≤19	1.4	30	134	4.0	2.0	500	1032	1032	1400
46.18	1247/27	PHQ731_0055K202_0084 ME20	3500	3100	5000	≤32	4.8	31	135	4.0	2.0	500	1050	1050	2100
46.18	1247/27	PHQ731_0055K202_0084 ME30	3500	3100	5000	≤38	10	33	136	4.0	2.0	500	1050	1050	2100
50.55	25069/496	PHQ731_0055K202_0092 ME10	3500	3100	5000	≤19	1.6	30	135	4.0	2.0	500	1050	1050	1533
50.55	25069/496	PHQ731_0055K202_0092 ME20	3500	3100	5000	≤32	5.0	31	136	4.0	2.0	500	1050	1050	2100
50.55	25069/496	PHQ731_0055K202_0092 ME30	3500	3100	5000	≤38	10	33	136	4.0	2.0	500	1050	1050	2100
55.40	2881/52	PHQ731_0055K202_0100 ME10	3900	3500	5500	≤19	1.2	30	135	4.0	2.0	500	1050	1050	1680
55.40	2881/52	PHQ731_0055K202_0100 ME20	3700	3500	5500	≤32	4.6	31	136	4.0	2.0	500	1050	1050	2100
55.40	2881/52	PHQ731_0055K202_0100 ME30	3500	3500	5000	≤38	10	33	136	4.0	2.0	500	1050	1050	2100
63.50	13717/216	PHQ731_0055K202_0115 ME10	3500	3100	5000	≤19	1.3	30	135	4.0	2.0	500	1050	1050	1925
63.50	13717/216	PHQ731_0055K202_0115 ME20	3500	3100	5000	≤32	4.7	31	136	4.0	2.0	500	1050	1050	2100
63.50	13717/216	PHQ731_0055K202_0115 ME30	3500	3100	5000	≤38	10	33	136	4.0	2.0	500	1050	1050	2100
69.88	559/8	PHQ731_0055K202_0125 ME10	3900	3500	5500	≤19	1.1	30	135	4.0	2.0	500	1050	1050	2100
69.88	559/8	PHQ731_0055K202_0125 ME20	3700	3500	5500	≤32	4.5	31	136	4.0	2.0	500	1050	1050	2100
69.88	559/8	PHQ731_0055K202_0125 ME30	3500	3500	5000	≤38	9.8	33	136	4.0	2.0	500	1050	1050	2100
76.18	31691/416	PHQ731_0055K202_0140 ME10	3900	3500	5500	≤19	1.1	30	135	4.0	2.0	500	1050	1050	2100
76.18	31691/416	PHQ731_0055K202_0140 ME20	3700	3500	5500	≤32	4.5	31	136	4.0	2.0	500	1050	1050	2100
76.18	31691/416	PHQ731_0055K202_0140 ME30	3500	3500	5000	≤38	9.9	33	136	4.0	2.0	500	1050	1050	2100
92.72	2967/32	PHQ731_0055K202_0170 ME10	4000	3900	6500	≤19	0.90	30	135	4.0	2.0	500	1050	1050	2100
92.72	2967/32	PHQ731_0055K202_0170 ME20	3700	3700	6000	≤32	4.3	31	136	4.0	2.0	500	1050	1050	2100
92.72	2967/32	PHQ731_0055K202_0170 ME30	3500	3500	5000	≤38	9.6	33	136	4.0	2.0	500	1050	1050	2100
96.08	6149/64	PHQ731_0055K202_0175 ME10	3900	3500	5500	≤19	1.0	30	135	4.0	2.0	500	1050	1050	2100
96.08	6149/64	PHQ731_0055K202_0175 ME20	3700	3500	5500	≤32	4.4	31	136	4.0	2.0	500	1050	1050	2100
96.08	6149/64	PHQ731_0055K202_0175 ME30	3500	3500	5000	≤38	9.7	33	136	4.0	2.0	500	1050	1050	2100
111.8	559/5	PHQ731_0055K202_0200 ME10	4000	3900	6500	≤19	0.83	30	136	4.0	2.0	500	1050	1050	2100
111.8	559/5	PHQ731_0055K202_0200 ME20	3700	3700	6000	≤24	2.7	31	136	4.0	2.0	500	1050	1050	2100
127.5	32637/256	PHQ731_0055K202_0230 ME10	4000	3900	6500	≤19	0.87	30	136	4.0	2.0	500	1050	1050	2100
127.5	32637/256	PHQ731_0055K202_0230 ME20	3700	3700	6000	≤32	4.3	31	136	4.0	2.0	500	1050	1050	2100
127.5	32637/256	PHQ731_0055K202_0230 ME30	3500	3500	5000	≤38	9.6	33	136	4.0	2.0	500	1050	1050	2100
138.2	1935/14	PHQ731_0055K202_0250 ME10	4000	3900	6500	≤19	0.77	30	136	4.0	2.0	500	1050	1050	2100
138.2	1935/14	PHQ731_0055K202_0250 ME20	3700	3700	6000	≤24	2.7	31	136	4.0	2.0	500	1050	1050	2100
153.7	6149/40	PHQ731_0055K202_0280 ME10	4000	3900	6500	≤19	0.81	30	136	4.0	2.0	500	1050	1050	2100
153.7	6149/40	PHQ731_0055K202_0280 ME20	3700	3700	6000	≤24	2.7	31	136	4.0	2.0	500	1050	1050	2100
184.9	1849/10	PHQ731_0055K202_0340 ME10	4000	3900	6500	≤19	0.71	30	136	4.0	2.0	500	976	976	1765
184.9	1849/10	PHQ731_0055K202_0340 ME20	3700	3700	6000	≤24	2.6	31	136	4.0	2.0	500	976	976	1765
190.0	21285/112	PHQ731_0055K202_0350 ME10	4000	3900	6500	≤19	0.76	30	136	4.0	2.0	500	1050	1050	2100
190.0	21285/112	PHQ731_0055K202_0350 ME20	3700	3700	6000	≤24	2.7	31	136	4.0	2.0	500	1050	1050	2100
222.2	1333/6	PHQ731_0055K202_0400 ME10	4000	3900	6500	≤19	0.66	30	136	4.0	2.0	500	732	732	1132
254.2	20339/80	PHQ731_0055K202_0460 ME10	4000	3900	6500	≤19	0.71	30	136	4.0	2.0	500	1050	1050	2100
254.2	20339/80	PHQ731_0055K202_0460 ME20	3700	3700	6000	≤24	2.6	31	136	4.0	2.0	500	1050	1050	2100
277.7	6665/24	PHQ731_0055K202_0500 ME10	4000	3900	6500	≤19	0.64	30	136	4.0	2.0	500	610	610	1062
305.5	14663/48	PHQ731_0055K202_0560 ME10	4000	3900	6500	≤19	0.66	30	136	4.0	2.0	500	1006	1006	1557
381.8	73315/192	PHQ731_0055K202_0690 ME10	4000	3900	6500	≤19	0.64	30	136	4.0	2.0	500	839	839	1461
PHQ831K ($M_{2acc,max}$ = 3168 Nm)															
22.00	22/1	PHQ831_0055K402_0040 ME30	2600	2200	3800	≤38	20	70	395	3.5	1.5	1400	2421	2421	4446
22.00	22/1	PHQ831_0055K402_0040 ME40	2600	2200	3800	≤48	42	74	394	3.5	1.5	1400	2421	2421	4446
24.00	24/1	PHQ831_0055K402_0044 ME30	2600	2200	3800	≤38	19	70	395	3.5	1.5	1400	2493	2493	4850
24.00	24/1	PHQ831_0055K402_0044 ME40	2600	2200	3800	≤48	40	74	395	3.5	1.5	1400	2493	2493	4850
29.82	1849/62	PHQ831_0055K402_0054 ME30	2600	2200	3800	≤38	16	70	397	3.5	1.5	1400	2680	2680	5087
29.82	1849/62	PHQ831_0055K402_0054 ME40	2600	2200	3800	≤48	38	74	397	3.5	1.5	1400	2680	2680	5087
33.00	33/1	PHQ831_0055K402_0060 ME30	2600	2200	3800	≤38	17	70	397	3.5	1.5	1400	2772	2772	5087
33.00	33/1	PHQ831_0055K402_0060 ME40	2600	2200	3800	≤48	39	74	397	3.5	1.5	1400	2772	2772	5087
36.95	2365/64	PHQ831_0055K402_0067 ME20	3000	2600	4500	≤32	8.6	68	395	3.5	1.5	1400	2065	2065	2801
36.95	2365/64	PHQ831_0055K402_0067 ME30	3000	2600	4500	≤38	14	70	398	3.5	1.5	1400	2800	2878	5087
36.95	2365/64	PHQ831_0055K402_0067 ME40	3000	2600	4500	≤48	36	74	398	3.5	1.5	1400	2800	2878	5087
41.01	20339/496	PHQ831_0055K402_0075 ME30	2600	2200	3800	≤38	15	70	398	3.5	1.5	1400	2800	2980	5087
41.01	20339/496	PHQ831_0055K402_0075 ME40	2600	2200	3800	≤48	37	74	398	3.5	1.5	1400	2800	2980	5087
46.07	645/14	PHQ831_0055K402_0084 ME20	3000	2600	4500	≤32	7.2	68	397	3.5	1.5	1400	2575	2575	3492
46.07	645/14	PHQ831_0055K402_0084 ME30	3000	2600	4500	≤38	13	70	398	3.5	1.5	1400	2800	3098	5087
46.07	645/14	PHQ831_0055K402_0084 ME40	3000	2600	4500	≤48	35	74	398	3.5	1.5	1400	2800	3098	5087

i	i_{exakt}	Type	n_{1MAXDB} EL1,2 [rpm]	n_{1MAXDB} EL3,4,5,6 [rpm]	n_{1MAXZB} [rpm]	d_{MW} [mm]	J_1 [kgcm²]	m [kg]	C_2 [Nm/arcmin]	$\Delta\varphi_2$ [arcmin]	$\Delta\varphi_{2red}$ [arcmin]	M_{2N} [Nm]	M_{2acc} [Nm]	M_{2accHT} [Nm]	M_{2NOT} [Nm]
PHQ831K ($M_{2acc,max}$ = 3168 Nm)															
50.81	26015/512	PHQ831_0055K402_0092 ME20	3000	2600	4500	≤32	7.7	68	397	3.5	1.5	1400	2800	2840	3852
50.81	26015/512	PHQ831_0055K402_0092 ME30	3000	2600	4500	≤38	13	70	399	3.5	1.5	1400	2800	3168	5087
50.81	26015/512	PHQ831_0055K402_0092 ME40	3000	2600	4500	≤48	35	74	399	3.5	1.5	1400	2800	3168	5087
55.54	1333/24	PHQ831_0055K402_0100 ME20	3400	3000	5000	≤32	6.4	68	398	3.5	1.5	1400	2800	3103	4209
55.54	1333/24	PHQ831_0055K402_0100 ME30	3400	3000	5000	≤38	12	70	399	3.5	1.5	1400	2800	3168	5087
55.54	1333/24	PHQ831_0055K402_0100 ME40	3000	3000	4500	≤48	34	74	399	3.5	1.5	1400	2800	3168	5087
63.35	7095/112	PHQ831_0055K402_0115 ME20	3000	2600	4500	≤32	6.7	68	398	3.5	1.5	1400	2800	3168	4802
63.35	7095/112	PHQ831_0055K402_0115 ME30	3000	2600	4500	≤38	12	70	399	3.5	1.5	1400	2800	3168	5087
63.35	7095/112	PHQ831_0055K402_0115 ME40	3000	2600	4500	≤48	34	74	399	3.5	1.5	1400	2800	3168	5087
69.62	1462/21	PHQ831_0055K402_0125 ME20	3400	3000	5000	≤32	5.7	68	398	3.5	1.5	1400	2800	3168	4981
69.62	1462/21	PHQ831_0055K402_0125 ME30	3400	3000	5000	≤38	11	70	399	3.5	1.5	1400	2800	3168	5087
69.62	1462/21	PHQ831_0055K402_0125 ME40	3000	3000	4500	≤48	33	74	399	3.5	1.5	1400	2800	3168	5087
76.37	14663/192	PHQ831_0055K402_0140 ME20	3400	3000	5000	≤32	6.1	68	399	3.5	1.5	1400	2800	3168	5087
76.37	14663/192	PHQ831_0055K402_0140 ME30	3400	3000	5000	≤38	12	70	399	3.5	1.5	1400	2800	3168	5087
76.37	14663/192	PHQ831_0055K402_0140 ME40	3000	3000	4500	≤48	33	74	399	3.5	1.5	1400	2800	3168	5087
93.16	559/6	PHQ831_0055K402_0170 ME20	3600	3300	5500	≤32	5.0	68	399	3.5	1.5	1400	2800	3168	5087
93.16	559/6	PHQ831_0055K402_0170 ME30	3500	3300	5000	≤38	11	70	399	3.5	1.5	1400	2800	3168	5087
93.16	559/6	PHQ831_0055K402_0170 ME40	3000	3000	4500	≤48	32	74	399	3.5	1.5	1400	2800	3168	5087
95.73	8041/84	PHQ831_0055K402_0175 ME20	3400	3000	5000	≤32	5.5	68	399	3.5	1.5	1400	2800	3168	5087
95.73	8041/84	PHQ831_0055K402_0175 ME30	3400	3000	5000	≤38	11	70	399	3.5	1.5	1400	2800	3168	5087
95.73	8041/84	PHQ831_0055K402_0175 ME40	3000	3000	4500	≤48	33	74	399	3.5	1.5	1400	2800	3168	5087
111.1	1333/12	PHQ831_0055K402_0200 ME20	3600	3300	5500	≤32	4.8	68	399	3.5	1.5	1400	2800	3168	5087
111.1	1333/12	PHQ831_0055K402_0200 ME30	3500	3300	5000	≤38	10	70	399	3.5	1.5	1400	2800	3168	5087
128.1	6149/48	PHQ831_0055K402_0230 ME20	3600	3300	5500	≤32	4.9	68	399	3.5	1.5	1400	2800	3168	5087
128.1	6149/48	PHQ831_0055K402_0230 ME30	3500	3300	5000	≤38	10	70	399	3.5	1.5	1400	2800	3168	5087
128.1	6149/48	PHQ831_0055K402_0230 ME40	3000	3000	4500	≤48	32	74	399	3.5	1.5	1400	2800	3168	5087
139.0	4171/30	PHQ831_0055K402_0250 ME20	3600	3300	5500	≤32	4.6	68	399	3.5	1.5	1400	2800	3168	5087
139.0	4171/30	PHQ831_0055K402_0250 ME30	3500	3300	5000	≤38	9.9	70	399	3.5	1.5	1400	2800	3168	5087
152.7	14663/96	PHQ831_0055K402_0280 ME20	3600	3300	5500	≤32	4.7	68	399	3.5	1.5	1400	2800	3168	5087
152.7	14663/96	PHQ831_0055K402_0280 ME30	3500	3300	5000	≤38	10	70	399	3.5	1.5	1400	2800	3168	5087
185.2	2408/13	PHQ831_0055K402_0340 ME20	3600	3300	5500	≤24	2.8	68	399	3.5	1.5	1400	2464	2464	4096
191.2	45881/240	PHQ831_0055K402_0350 ME20	3600	3300	5500	≤32	4.5	68	399	3.5	1.5	1400	2800	3168	5087
191.2	45881/240	PHQ831_0055K402_0350 ME30	3500	3300	5000	≤38	9.8	70	399	3.5	1.5	1400	2800	3168	5087
222.8	2451/11	PHQ831_0055K402_0410 ME20	3600	3300	5500	≤24	2.8	68	399	3.5	1.5	1400	1952	1952	3529
254.7	3311/13	PHQ831_0055K402_0460 ME20	3600	3300	5500	≤24	2.8	68	399	3.5	1.5	1400	2800	3168	5087
277.3	5547/20	PHQ831_0055K402_0500 ME20	3600	3300	5500	≤24	2.7	68	399	3.5	1.5	1400	1708	1708	3088
306.4	2451/8	PHQ831_0055K402_0560 ME20	3600	3300	5500	≤24	2.7	68	399	3.5	1.5	1400	2684	2684	4853
381.4	61017/160	PHQ831_0055K402_0690 ME20	3600	3300	5500	≤24	2.7	68	400	3.5	1.5	1400	2348	2348	4247
PHQ931K ($M_{2acc,max}$ = 5760 Nm)															
44.08	1102/25	PHQ931_0060K513_0073 ME30	1900	1800	3200	≤38	26	92	767	4.0	–	3800	5760	–	8779
44.08	1102/25	PHQ931_0060K513_0073 ME40	1900	1800	3200	≤48	48	97	766	4.0	–	3800	5760	–	8779
48.80	17081/350	PHQ931_0060K513_0081 ME30	1900	1800	3200	≤38	24	92	767	4.0	–	3800	5760	–	9720
48.80	17081/350	PHQ931_0060K513_0081 ME40	1900	1800	3200	≤48	46	97	767	4.0	–	3800	5760	–	9720
55.01	8526/155	PHQ931_0060K513_0092 ME30	1900	1800	3200	≤38	21	92	768	4.0	–	3800	5760	–	10954
55.01	8526/155	PHQ931_0060K513_0092 ME40	1900	1800	3200	≤48	43	97	768	4.0	–	3800	5760	–	10954
60.90	609/10	PHQ931_0060K513_0100 ME30	1900	1800	3200	≤38	20	92	769	4.0	–	3800	5760	–	11250
60.90	609/10	PHQ931_0060K513_0100 ME40	1900	1800	3200	≤48	42	97	768	4.0	–	3800	5760	–	11250
69.41	10759/155	PHQ931_0060K513_0115 ME30	2300	2200	3600	≤38	18	92	769	4.0	–	3800	5760	–	11250
69.41	10759/155	PHQ931_0060K513_0115 ME40	2300	2200	3600	≤48	40	97	769	4.0	–	3800	5760	–	11250
76.85	1537/20	PHQ931_0060K513_0130 ME30	2300	2200	3600	≤38	17	92	770	4.0	–	3800	5760	–	11250
76.85	1537/20	PHQ931_0060K513_0130 ME40	2300	2200	3600	≤48	39	97	769	4.0	–	3800	5760	–	11250
87.22	11774/135	PHQ931_0060K513_0145 ME20	2300	2200	3600	≤32	9.9	90	768	4.0	–	3800	4801	–	6512
87.22	11774/135	PHQ931_0060K513_0145 ME30	2300	2200	3600	≤38	15	92	770	4.0	–	3800	5760	–	11250
87.22	11774/135	PHQ931_0060K513_0145 ME40	2300	2200	3600	≤48	37	97	770	4.0	–	3800	5760	–	11250
96.56	26071/270	PHQ931_0060K513_0160 ME20	2300	2200	3600	≤32	9.5	90	769	4.0	–	3800	5315	–	7209
96.56	26071/270	PHQ931_0060K513_0160 ME30	2300	2200	3600	≤38	15	92	770	4.0	–	3800	5760	–	11250
96.56	26071/270	PHQ931_0060K513_0160 ME40	2300	2200	3600	≤48	37	97	770	4.0	–	3800	5760	–	11250
104.9	6293/60	PHQ931_0060K513_0175 ME20	2800	2500	4200	≤32	8.5	90	769	4.0	–	3800	5760	–	7830
104.9	6293/60	PHQ931_0060K513_0175 ME30	2800	2500	4200	≤38	14	92	770	4.0	–	3800	5760	–	11250
104.9	6293/60	PHQ931_0060K513_0175 ME40	2800	2500	4200	≤48	36	97	770	4.0	–	3800	5760	–	11250
116.1	27869/240	PHQ931_0060K513_0195 ME20	2800	2500	4200	≤32	8.2	90	769	4.0	–	3800	5760	–	8669
116.1	27869/240	PHQ931_0060K513_0195 ME30	2800	2500	4200	≤38	14	92	770	4.0	–	3800	5760	–	11250
116.1	27869/240	PHQ931_0060K513_0195 ME40	2800	2500	4200	≤48	36	97	770	4.0	–	3800	5760	–	11250
132.0	2639/20	PHQ931_0060K513_0220 ME20	2800	2500	4200	≤32	7.2	90	770	4.0	–	3800	5760	–	9158

i	i_{exakt}	Type	n_{1MAXDB} EL1,2 [rpm]	n_{1MAXDB} EL3,4,5,6 [rpm]	n_{1MAXZB} [rpm]	d_{MW} [mm]	J_1 [kgcm²]	m [kg]	C_2 [Nm/arcmin]	$\Delta\varphi_2$ [arcmin]	$\Delta\varphi_{2red}$ [arcmin]	M_{2N} [Nm]	M_{2acc} [Nm]	M_{2accHT} [Nm]	M_{2NOT} [Nm]
PHQ931K ($M_{2acc,max}$ = 5760 Nm)															
132.0	2639/20	PHQ931_0060K513_0220 ME30	2800	2500	4200	≤38	13	92	771	4.0	–	3800	5760	–	11250
132.0	2639/20	PHQ931_0060K513_0220 ME40	2800	2500	4200	≤48	35	97	771	4.0	–	3800	5760	–	11250
146.1	11687/80	PHQ931_0060K513_0240 ME20	2800	2500	4200	≤32	7.0	90	770	4.0	–	3800	5760	–	10139
146.1	11687/80	PHQ931_0060K513_0240 ME30	2800	2500	4200	≤38	12	92	771	4.0	–	3800	5760	–	11250
146.1	11687/80	PHQ931_0060K513_0240 ME40	2800	2500	4200	≤48	34	97	771	4.0	–	3800	5760	–	11250
175.1	14007/80	PHQ931_0060K513_0290 ME20	3400	3000	5000	≤32	6.1	90	770	4.0	–	3800	5760	–	10349
175.1	14007/80	PHQ931_0060K513_0290 ME30	3400	3000	5000	≤38	12	92	771	4.0	–	3800	5760	–	11250
175.1	14007/80	PHQ931_0060K513_0290 ME40	3000	3000	4500	≤48	33	97	771	4.0	–	3800	5760	–	11250
193.8	62031/320	PHQ931_0060K513_0320 ME20	3400	3000	5000	≤32	6.0	90	771	4.0	–	3800	5760	–	11250
193.8	62031/320	PHQ931_0060K513_0320 ME30	3400	3000	5000	≤38	11	92	771	4.0	–	3800	5760	–	11250
193.8	62031/320	PHQ931_0060K513_0320 ME40	3000	3000	4500	≤48	33	97	771	4.0	–	3800	5760	–	11250
208.8	1044/5	PHQ931_0060K513_0350 ME20	3400	3000	5000	≤32	5.6	90	771	4.0	–	3800	5760	–	11129
208.8	1044/5	PHQ931_0060K513_0350 ME30	3400	3000	5000	≤38	11	92	771	4.0	–	3800	5760	–	11129
231.2	8091/35	PHQ931_0060K513_0390 ME20	3400	3000	5000	≤32	5.5	90	771	4.0	–	3800	5760	–	11250
231.2	8091/35	PHQ931_0060K513_0390 ME30	3400	3000	5000	≤38	11	92	771	4.0	–	3800	5760	–	11250
261.0	261/1	PHQ931_0060K513_0440 ME20	3400	3000	5000	≤32	5.1	90	771	4.0	–	3800	5760	–	11250
261.0	261/1	PHQ931_0060K513_0440 ME30	3400	3000	5000	≤38	10	92	771	4.0	–	3800	5760	–	11250
289.0	8091/28	PHQ931_0060K513_0480 ME20	3400	3000	5000	≤32	5.1	90	771	4.0	–	3800	5760	–	11250
289.0	8091/28	PHQ931_0060K513_0480 ME30	3400	3000	5000	≤38	10	92	771	4.0	–	3800	5760	–	11250
349.8	22736/65	PHQ931_0060K513_0580 ME20	3400	3000	5000	≤32	4.7	90	771	4.0	–	3800	5760	–	11250
349.8	22736/65	PHQ931_0060K513_0580 ME30	3400	3000	5000	≤38	10	92	771	4.0	–	3800	5760	–	11250
387.3	25172/65	PHQ931_0060K513_0650 ME20	3400	3000	5000	≤32	4.7	90	771	4.0	–	3800	5760	–	11250
387.3	25172/65	PHQ931_0060K513_0650 ME30	3400	3000	5000	≤38	10	92	771	4.0	–	3800	5760	–	11250
420.5	841/2	PHQ931_0060K513_0700 ME20	3400	3000	5000	≤24	3.0	90	771	4.0	–	3800	5673	–	7978
465.6	26071/56	PHQ931_0060K513_0780 ME20	3400	3000	5000	≤24	3.0	90	771	4.0	–	3800	5760	–	8832
523.7	26187/50	PHQ931_0060K513_0870 ME20	3400	3000	5000	≤24	2.8	90	771	4.0	–	3800	4765	–	8230
579.9	115971/200	PHQ931_0060K513_0970 ME20	3400	3000	5000	≤24	2.8	90	771	4.0	–	3800	5275	–	9112
PHQ1031K ($M_{2acc,max}$ = 10000 Nm)															
45.38	59535/1312	PHQ1031_0060K713_0076 ME40	1700	1600	2700	≤48	92	157	1545	4.0	–	6500	10000	–	16947
45.38	59535/1312	PHQ1031_0060K713_0076 ME50	1700	1600	2700	≤60	120	164	1551	4.0	–	6500	10000	–	16947
50.24	263655/5248	PHQ1031_0060K713_0084 ME40	1700	1600	2700	≤48	88	157	1548	4.0	–	6500	10000	–	18762
50.24	263655/5248	PHQ1031_0060K713_0084 ME50	1700	1600	2700	≤60	116	164	1553	4.0	–	6500	10000	–	18762
55.13	441/8	PHQ1031_0060K713_0092 ME40	1700	1600	2700	≤48	77	157	1550	4.0	–	6500	10000	–	20000
55.13	441/8	PHQ1031_0060K713_0092 ME50	1700	1600	2700	≤60	105	164	1554	4.0	–	6500	10000	–	20000
61.03	1953/32	PHQ1031_0060K713_0100 ME40	1700	1600	2700	≤48	74	157	1552	4.0	–	6500	10000	–	20000
61.03	1953/32	PHQ1031_0060K713_0100 ME50	1700	1600	2700	≤60	102	164	1555	4.0	–	6500	10000	–	20000
70.69	70119/992	PHQ1031_0060K713_0120 ME30	2000	1900	3200	≤38	41	152	1553	4.0	–	6500	10000	–	14077
70.69	70119/992	PHQ1031_0060K713_0120 ME40	2000	1900	3200	≤48	63	157	1554	4.0	–	6500	10000	–	20000
70.69	70119/992	PHQ1031_0060K713_0120 ME50	2000	1900	3200	≤60	91	164	1557	4.0	–	6500	10000	–	20000
78.26	10017/128	PHQ1031_0060K713_0130 ME30	2000	1900	3200	≤38	39	152	1555	4.0	–	6500	10000	–	15584
78.26	10017/128	PHQ1031_0060K713_0130 ME40	2000	1900	3200	≤48	62	157	1555	4.0	–	6500	10000	–	20000
78.26	10017/128	PHQ1031_0060K713_0130 ME50	2000	1900	3200	≤60	89	164	1557	4.0	–	6500	10000	–	20000
88.81	1421/16	PHQ1031_0060K713_0150 ME30	2000	1900	3200	≤38	32	152	1556	4.0	–	6500	10000	–	17637
88.81	1421/16	PHQ1031_0060K713_0150 ME40	2000	1900	3200	≤48	55	157	1557	4.0	–	6500	10000	–	20000
88.81	1421/16	PHQ1031_0060K713_0150 ME50	2000	1900	3200	≤60	83	164	1558	4.0	–	6500	10000	–	20000
98.33	6293/64	PHQ1031_0060K713_0165 ME30	2000	1900	3200	≤38	31	152	1557	4.0	–	6500	10000	–	19525
98.33	6293/64	PHQ1031_0060K713_0165 ME40	2000	1900	3200	≤48	53	157	1557	4.0	–	6500	10000	–	20000
98.33	6293/64	PHQ1031_0060K713_0165 ME50	2000	1900	3200	≤60	81	164	1559	4.0	–	6500	10000	–	20000
109.7	80703/736	PHQ1031_0060K713_0185 ME30	2400	2200	3600	≤38	26	152	1558	4.0	–	6500	10000	–	20000
109.7	80703/736	PHQ1031_0060K713_0185 ME40	2400	2200	3600	≤48	49	157	1558	4.0	–	6500	10000	–	20000
109.7	80703/736	PHQ1031_0060K713_0185 ME50	2400	2200	3600	≤60	77	164	1559	4.0	–	6500	10000	–	20000
121.4	357399/2944	PHQ1031_0060K713_0200 ME30	2400	2200	3600	≤38	26	152	1558	4.0	–	6500	10000	–	20000
121.4	357399/2944	PHQ1031_0060K713_0200 ME40	2400	2200	3600	≤48	48	157	1558	4.0	–	6500	10000	–	20000
121.4	357399/2944	PHQ1031_0060K713_0200 ME50	2400	2200	3600	≤60	76	164	1559	4.0	–	6500	10000	–	20000
136.4	43659/320	PHQ1031_0060K713_0230 ME30	2400	2200	3600	≤38	22	152	1559	4.0	–	6500	10000	–	20000
136.4	43659/320	PHQ1031_0060K713_0230 ME40	2400	2200	3600	≤48	44	157	1559	4.0	–	6500	10000	–	20000
136.4	43659/320	PHQ1031_0060K713_0230 ME50	2400	2200	3600	≤60	72	164	1560	4.0	–	6500	10000	–	20000
151.1	193347/1280	PHQ1031_0060K713_0250 ME30	2400	2200	3600	≤38	21	152	1559	4.0	–	6500	10000	–	20000
151.1	193347/1280	PHQ1031_0060K713_0250 ME40	2400	2200	3600	≤48	44	157	1559	4.0	–	6500	10000	–	20000
151.1	193347/1280	PHQ1031_0060K713_0250 ME50	2400	2200	3600	≤60	72	164	1560	4.0	–	6500	10000	–	20000
175.7	22491/128	PHQ1031_0060K713_0290 ME30	2900	2600	4200	≤38	18	152	1559	4.0	–	6500	10000	–	20000
175.7	22491/128	PHQ1031_0060K713_0290 ME40	2900	2600	4200	≤48	40	157	1560	4.0	–	6500	10000	–	20000
175.7	22491/128	PHQ1031_0060K713_0290 ME50	2500	2500	4000	≤60	68	164	1560	4.0	–	6500	10000	–	20000
194.5	99603/512	PHQ1031_0060K713_0320 ME30	2900	2600	4200	≤38	17	152	1560	4.0	–	6500	10000	–	20000

i	i_{exakt}	Type	n_{1MAXDB} EL1,2 [rpm]	n_{1MAXDB} EL3,4,5,6 [rpm]	n_{1MAXZB} [rpm]	d_{MW} [mm]	J_1 [kgcm²]	m [kg]	C_2 [Nm/arcmin]	$\Delta\varphi_2$ [arcmin]	$\Delta\varphi_{2red}$ [arcmin]	M_{2N} [Nm]	M_{2acc} [Nm]	M_{2accHT} [Nm]	M_{2NOT} [Nm]
PHQ1031K ($M_{2acc,max}$ = 10000 Nm)															
194.5	99603/512	PHQ1031_0060K713_0320 ME40	2900	2600	4200	≤48	40	157	1560	4.0	–	6500	10000	–	20000
194.5	99603/512	PHQ1031_0060K713_0320 ME50	2500	2500	4000	≤60	68	164	1560	4.0	–	6500	10000	–	20000
212.6	1701/8	PHQ1031_0060K713_0350 ME30	2900	2600	4200	≤38	16	152	1560	4.0	–	6500	10000	–	20000
212.6	1701/8	PHQ1031_0060K713_0350 ME40	2900	2600	4200	≤48	37	157	1560	4.0	–	6500	10000	–	20000
212.6	1701/8	PHQ1031_0060K713_0350 ME50	2500	2500	4000	≤60	66	164	1560	4.0	–	6500	10000	–	20000
235.4	7533/32	PHQ1031_0060K713_0390 ME30	2900	2600	4200	≤38	15	152	1560	4.0	–	6500	10000	–	20000
235.4	7533/32	PHQ1031_0060K713_0390 ME40	2900	2600	4200	≤48	37	157	1560	4.0	–	6500	10000	–	20000
235.4	7533/32	PHQ1031_0060K713_0390 ME50	2500	2500	4000	≤60	66	164	1560	4.0	–	6500	10000	–	20000
270.3	112455/416	PHQ1031_0060K713_0450 ME30	2900	2600	4200	≤38	14	152	1560	4.0	–	6500	10000	–	20000
270.3	112455/416	PHQ1031_0060K713_0450 ME40	2900	2600	4200	≤48	35	157	1560	4.0	–	6500	10000	–	20000
270.3	112455/416	PHQ1031_0060K713_0450 ME50	2500	2500	4000	≤60	65	164	1560	4.0	–	6500	10000	–	20000
299.3	498015/1664	PHQ1031_0060K713_0500 ME30	2900	2600	4200	≤38	13	152	1560	4.0	–	6500	10000	–	20000
299.3	498015/1664	PHQ1031_0060K713_0500 ME40	2900	2600	4200	≤48	35	157	1560	4.0	–	6500	10000	–	20000
299.3	498015/1664	PHQ1031_0060K713_0500 ME50	2500	2500	4000	≤60	64	164	1560	4.0	–	6500	10000	–	20000
351.4	22491/64	PHQ1031_0060K713_0590 ME30	2900	2600	4200	≤38	12	152	1560	4.0	–	6500	10000	–	20000
351.4	22491/64	PHQ1031_0060K713_0590 ME40	2900	2600	4200	≤48	34	157	1560	4.0	–	6500	10000	–	20000
351.4	22491/64	PHQ1031_0060K713_0590 ME50	2500	2500	4000	≤60	63	164	1560	4.0	–	6500	10000	–	20000
389.1	99603/256	PHQ1031_0060K713_0650 ME30	2900	2600	4200	≤38	12	152	1560	4.0	–	6500	10000	–	20000
389.1	99603/256	PHQ1031_0060K713_0650 ME40	2900	2600	4200	≤48	34	157	1560	4.0	–	6500	10000	–	20000
389.1	99603/256	PHQ1031_0060K713_0650 ME50	2500	2500	4000	≤60	63	164	1560	4.0	–	6500	10000	–	20000
427.2	13671/32	PHQ1031_0060K713_0710 ME30	2900	2600	4200	≤38	11	152	1560	4.0	–	6500	10000	–	17784
473.0	60543/128	PHQ1031_0060K713_0790 ME30	2900	2600	4200	≤38	11	152	1560	4.0	–	6500	10000	–	19689
534.0	68355/128	PHQ1031_0060K713_0890 ME30	2900	2600	4200	≤38	11	152	1560	4.0	–	6500	10000	–	18784
591.2	302715/512	PHQ1031_0060K713_0990 ME30	2900	2600	4200	≤38	11	152	1560	4.0	–	6500	10000	–	20000
PHQ1131K ($M_{2acc,max}$ = 22000 Nm)															
44.67	3127/70	PHQ1131_0060K813_0074 ME40	1600	1500	2600	≤48	178	297	2578	4.0	–	12299	12299	–	16681
44.67	3127/70	PHQ1131_0060K813_0074 ME50	1600	1500	2600	≤60	206	305	2595	4.0	–	12299	12299	–	16681
49.46	96937/1960	PHQ1131_0060K813_0082 ME40	1600	1500	2600	≤48	164	297	2586	4.0	–	13000	13617	–	18470
49.46	96937/1960	PHQ1131_0060K813_0082 ME50	1600	1500	2600	≤60	192	305	2600	4.0	–	13000	13617	–	18470
55.70	11977/215	PHQ1131_0060K813_0093 ME40	1600	1500	2600	≤48	136	297	2594	4.0	–	13000	15334	–	20797
55.70	11977/215	PHQ1131_0060K813_0093 ME50	1600	1500	2600	≤60	164	305	2605	4.0	–	13000	15334	–	20797
61.67	53041/860	PHQ1131_0060K813_0105 ME40	1600	1500	2600	≤48	127	297	2599	4.0	–	13000	16978	–	23027
61.67	53041/860	PHQ1131_0060K813_0105 ME50	1600	1500	2600	≤60	155	305	2608	4.0	–	13000	16978	–	23027
89.05	28497/320	PHQ1131_0060K813_0150 ME40	1900	1800	3000	≤48	83	297	2612	4.0	–	13000	22000	–	33239
89.05	28497/320	PHQ1131_0060K813_0150 ME50	1900	1800	3000	≤60	111	305	2616	4.0	–	13000	22000	–	33239
98.59	126201/1280	PHQ1131_0060K813_0165 ME40	1900	1800	3000	≤48	79	297	2614	4.0	–	13000	22000	–	36803
98.59	126201/1280	PHQ1131_0060K813_0165 ME50	1900	1800	3000	≤60	107	305	2617	4.0	–	13000	22000	–	36803
104.0	30149/290	PHQ1131_0060K813_0175 ME30	2300	2100	3500	≤38	50	292	2614	4.0	–	11663	15259	–	20696
104.0	30149/290	PHQ1131_0060K813_0175 ME40	2300	2100	3500	≤48	73	297	2615	4.0	–	13000	22000	–	38804
104.0	30149/290	PHQ1131_0060K813_0175 ME50	2300	2100	3500	≤60	101	305	2618	4.0	–	13000	22000	–	38804
115.1	133517/1160	PHQ1131_0060K813_0190 ME30	2300	2100	3500	≤38	48	292	2616	4.0	–	12912	16895	–	22915
115.1	133517/1160	PHQ1131_0060K813_0190 ME40	2300	2100	3500	≤48	70	297	2616	4.0	–	13000	22000	–	42965
115.1	133517/1160	PHQ1131_0060K813_0190 ME50	2300	2100	3500	≤60	98	305	2619	4.0	–	13000	22000	–	42965
138.3	31801/230	PHQ1131_0060K813_0230 ME30	2300	2100	3500	≤38	36	292	2618	4.0	–	12400	18048	–	24479
138.3	31801/230	PHQ1131_0060K813_0230 ME40	2300	2100	3500	≤48	59	297	2619	4.0	–	13000	22000	–	44000
138.3	31801/230	PHQ1131_0060K813_0230 ME50	2300	2100	3500	≤60	87	305	2620	4.0	–	13000	22000	–	44000
153.1	140833/920	PHQ1131_0060K813_0260 ME30	2300	2100	3500	≤38	35	292	2619	4.0	–	13000	19983	–	27103
153.1	140833/920	PHQ1131_0060K813_0260 ME40	2300	2100	3500	≤48	57	297	2619	4.0	–	13000	22000	–	44000
153.1	140833/920	PHQ1131_0060K813_0260 ME50	2300	2100	3500	≤60	85	305	2621	4.0	–	13000	22000	–	44000
175.5	7021/40	PHQ1131_0060K813_0290 ME30	2800	2500	4000	≤38	28	292	2620	4.0	–	13000	21591	–	29284
175.5	7021/40	PHQ1131_0060K813_0290 ME40	2800	2500	4000	≤48	50	297	2620	4.0	–	13000	22000	–	44000
175.5	7021/40	PHQ1131_0060K813_0290 ME50	2500	2500	4000	≤60	78	305	2621	4.0	–	13000	22000	–	44000
194.3	31093/160	PHQ1131_0060K813_0320 ME30	2800	2500	4000	≤38	27	292	2621	4.0	–	13000	22000	–	32424
194.3	31093/160	PHQ1131_0060K813_0320 ME40	2800	2500	4000	≤48	50	297	2621	4.0	–	13000	22000	–	44000
194.3	31093/160	PHQ1131_0060K813_0320 ME50	2500	2500	4000	≤60	77	305	2622	4.0	–	13000	22000	–	44000
216.8	8673/40	PHQ1131_0060K813_0360 ME30	2800	2500	4000	≤38	23	292	2621	4.0	–	13000	22000	–	30353
216.8	8673/40	PHQ1131_0060K813_0360 ME40	2800	2500	4000	≤48	45	297	2621	4.0	–	13000	22000	–	44000
216.8	8673/40	PHQ1131_0060K813_0360 ME50	2500	2500	4000	≤60	73	305	2622	4.0	–	13000	22000	–	44000
240.1	38409/160	PHQ1131_0060K813_0400 ME30	2800	2500	4000	≤38	22	292	2622	4.0	–	13000	22000	–	33607
240.1	38409/160	PHQ1131_0060K813_0400 ME40	2800	2500	4000	≤48	45	297	2622	4.0	–	13000	22000	–	44000
240.1	38409/160	PHQ1131_0060K813_0400 ME50	2500	2500	4000	≤60	72	305	2622	4.0	–	13000	22000	–	44000
265.5	531/2	PHQ1131_0060K813_0440 ME30	2800	2500	4000	≤38	19	292	2622	4.0	–	13000	22000	–	34112
265.5	531/2	PHQ1131_0060K813_0440 ME40	2800	2500	4000	≤48	41	297	2622	4.0	–	13000	22000	–	34112
265.5	531/2	PHQ1131_0060K813_0440 ME50	2500	2500	4000	≤60	70	305	2622	4.0	–	13000	22000	–	34112

i	i_{exakt}	Type	n_{1MAXDB} EL1,2 [rpm]	n_{1MAXDB} EL3,4,5,6 [rpm]	n_{1MAXZB} [rpm]	d_{MW} [mm]	J_1 [kgcm²]	m [kg]	C_2 [Nm/arcmin]	$\Delta\varphi_2$ [arcmin]	$\Delta\varphi_{2red}$ [arcmin]	M_{2N} [Nm]	M_{2acc} [Nm]	M_{2accHT} [Nm]	M_{2NOT} [Nm]
PHQ1131K ($M_{2acc,max}$ = 22000 Nm)															
293.9	16461/56	PHQ1131_0060K813_0490 ME30	2800	2500	4000	≤38	18	292	2622	4.0	–	13000	22000	–	37770
293.9	16461/56	PHQ1131_0060K813_0490 ME40	2800	2500	4000	≤48	40	297	2622	4.0	–	13000	22000	–	37770
293.9	16461/56	PHQ1131_0060K813_0490 ME50	2500	2500	4000	≤60	69	305	2622	4.0	–	13000	22000	–	37770
354.5	42539/120	PHQ1131_0060K813_0590 ME30	2800	2500	4000	≤38	15	292	2622	4.0	–	13000	22000	–	39925
354.5	42539/120	PHQ1131_0060K813_0590 ME40	2800	2500	4000	≤48	37	297	2622	4.0	–	13000	22000	–	39925
354.5	42539/120	PHQ1131_0060K813_0590 ME50	2500	2500	4000	≤60	66	305	2623	4.0	–	13000	22000	–	39925
392.5	188387/480	PHQ1131_0060K813_0650 ME30	2800	2500	4000	≤38	15	292	2623	4.0	–	13000	22000	–	44000
392.5	188387/480	PHQ1131_0060K813_0650 ME40	2800	2500	4000	≤48	37	297	2623	4.0	–	13000	22000	–	44000
392.5	188387/480	PHQ1131_0060K813_0650 ME50	2500	2500	4000	≤60	66	305	2623	4.0	–	13000	22000	–	44000
430.2	10325/24	PHQ1131_0060K813_0720 ME30	2800	2500	4000	≤38	14	292	2623	4.0	–	13000	22000	–	43793
430.2	10325/24	PHQ1131_0060K813_0720 ME40	2800	2500	4000	≤48	35	297	2623	4.0	–	13000	22000	–	43793
430.2	10325/24	PHQ1131_0060K813_0720 ME50	2500	2500	4000	≤60	64	305	2623	4.0	–	13000	22000	–	43793
476.3	45725/96	PHQ1131_0060K813_0790 ME30	2800	2500	4000	≤38	13	292	2623	4.0	–	13000	22000	–	44000
476.3	45725/96	PHQ1131_0060K813_0790 ME40	2800	2500	4000	≤48	35	297	2623	4.0	–	13000	22000	–	44000
476.3	45725/96	PHQ1131_0060K813_0790 ME50	2500	2500	4000	≤60	64	305	2623	4.0	–	13000	22000	–	44000
526.6	21063/40	PHQ1131_0060K813_0880 ME30	2800	2500	4000	≤38	12	292	2623	4.0	–	13000	15191	–	20604
583.0	93279/160	PHQ1131_0060K813_0970 ME30	2800	2500	4000	≤38	12	292	2623	4.0	–	13000	16820	–	22813
PHQ1231K ($M_{2acc,max}$ = 43000 Nm)															
75.15	221247/2944	PHQ1231_0060K913_0125 ME40	1800	1800	2800	≤48	196	544	4614	4.0	–	20689	20689	–	28062
75.15	221247/2944	PHQ1231_0060K913_0125 ME50	1800	1800	2800	≤60	224	551	4633	4.0	–	20689	20689	–	28062
114.4	915/8	PHQ1231_0060K913_0190 ME40	2200	2100	3300	≤48	120	544	4643	4.0	–	25000	31485	–	42705
114.4	915/8	PHQ1231_0060K913_0190 ME50	2200	2100	3300	≤60	148	551	4651	4.0	–	25000	31485	–	42705
143.7	266631/1856	PHQ1231_0060K913_0240 ME40	2200	2100	3300	≤48	94	544	4651	4.0	–	25000	39537	–	53625
143.7	266631/1856	PHQ1231_0060K913_0240 ME50	2200	2100	3300	≤60	122	551	4656	4.0	–	25000	39537	–	53625
192.7	141825/736	PHQ1231_0060K913_0320 ME40	2600	2500	3800	≤48	72	544	4657	4.0	–	25000	43000	–	71941
192.7	141825/736	PHQ1231_0060K913_0320 ME50	2500	2500	3800	≤60	100	551	4660	4.0	–	25000	43000	–	71941
228.3	584319/2560	PHQ1231_0060K913_0380 ME40	2600	2500	3800	≤48	63	544	4659	4.0	–	25000	43000	–	78148
228.3	584319/2560	PHQ1231_0060K913_0380 ME50	2500	2500	3800	≤60	91	551	4661	4.0	–	25000	43000	–	78148
293.6	300669/1024	PHQ1231_0060K913_0490 ME40	2600	2500	3800	≤48	52	544	4661	4.0	–	25000	43000	–	80000
293.6	300669/1024	PHQ1231_0060K913_0490 ME50	2500	2500	3800	≤60	80	551	4663	4.0	–	25000	43000	–	80000
378.4	629703/1664	PHQ1231_0060K913_0630 ME40	2600	2500	3800	≤48	45	544	4663	4.0	–	25000	43000	–	80000
378.4	629703/1664	PHQ1231_0060K913_0630 ME50	2500	2500	3800	≤60	73	551	4663	4.0	–	25000	43000	–	80000
450.0	187209/416	PHQ1231_0060K913_0750 ME40	2600	2500	3800	≤48	41	544	4663	4.0	–	25000	39283	–	53281
450.0	187209/416	PHQ1231_0060K913_0750 ME50	2500	2500	3800	≤60	70	551	4664	4.0	–	25000	39283	–	53281
554.1	7199037/12992	PHQ1231_0060K914_0920 ME40	2600	2500	3800	≤48	37	556	4664	4.0	–	25000	39537	–	53625
562.7	4177219/7424	PHQ1231_0060K914_0940 ME30	2600	2500	3800	≤38	14	551	4663	4.0	–	16474	16744	–	22711
572.5	293105/512	PHQ1231_0060K913_0950 ME40	2600	2500	3800	≤48	38	544	4664	4.0	–	25000	37154	–	57575
572.5	293105/512	PHQ1231_0060K913_0950 ME50	2500	2500	3800	≤60	67	551	4664	4.0	–	25000	37154	–	57575
743.3	3829275/5152	PHQ1231_0060K914_1240 ME40	2600	2500	3800	≤48	36	556	4664	4.0	–	25000	43000	–	71941
754.7	2221925/2944	PHQ1231_0060K914_1260 ME30	2600	2500	3800	≤38	12	551	4664	4.0	–	22100	22460	–	30464
880.4	15776613/17920	PHQ1231_0060K914_1470 ME40	2600	2500	3800	≤48	35	556	4664	4.0	–	25000	43000	–	78148
894.0	9154331/10240	PHQ1231_0060K914_1490 ME30	2600	2500	3800	≤38	12	551	4664	4.0	–	25000	26495	–	35937
1133	8118063/7168	PHQ1231_0060K914_1890 ME40	2600	2500	3800	≤48	34	556	4664	4.0	–	25000	43000	–	80000
1150	4710481/4096	PHQ1231_0060K914_1920 ME30	2600	2500	3800	≤38	11	551	4664	4.0	–	25000	29221	–	39634
1460	17001981/11648	PHQ1231_0060K914_2430 ME40	2600	2500	3800	≤48	34	556	4665	4.0	–	25000	43000	–	80000
1482	9865347/6656	PHQ1231_0060K914_2470 ME30	2600	2500	3800	≤38	11	551	4665	4.0	–	25000	33013	–	44777
1763	2932941/1664	PHQ1231_0060K914_2940 ME30	2600	2500	3800	≤38	10	551	4665	4.0	–	25000	39283	–	53281
2242	13775935/6144	PHQ1231_0060K914_3740 ME30	2600	2500	3800	≤38	10	551	4665	4.0	–	25000	37154	–	57575

14.3 Dimensional drawings

In this chapter, you can find the dimensions of the gear units as well as example dimensions of the mountable motor adapters.

Dimensions can exceed the specifications of ISO 2768-mK due to casting tolerances or accumulation of individual tolerances.

We reserve the right to make dimensional changes due to ongoing technical development.

You can download 3D models of our standard drives at http://configurator.stoeber.de.

14.3.1 PHQ5K – PHQ10K F shaft design (flange shaft)

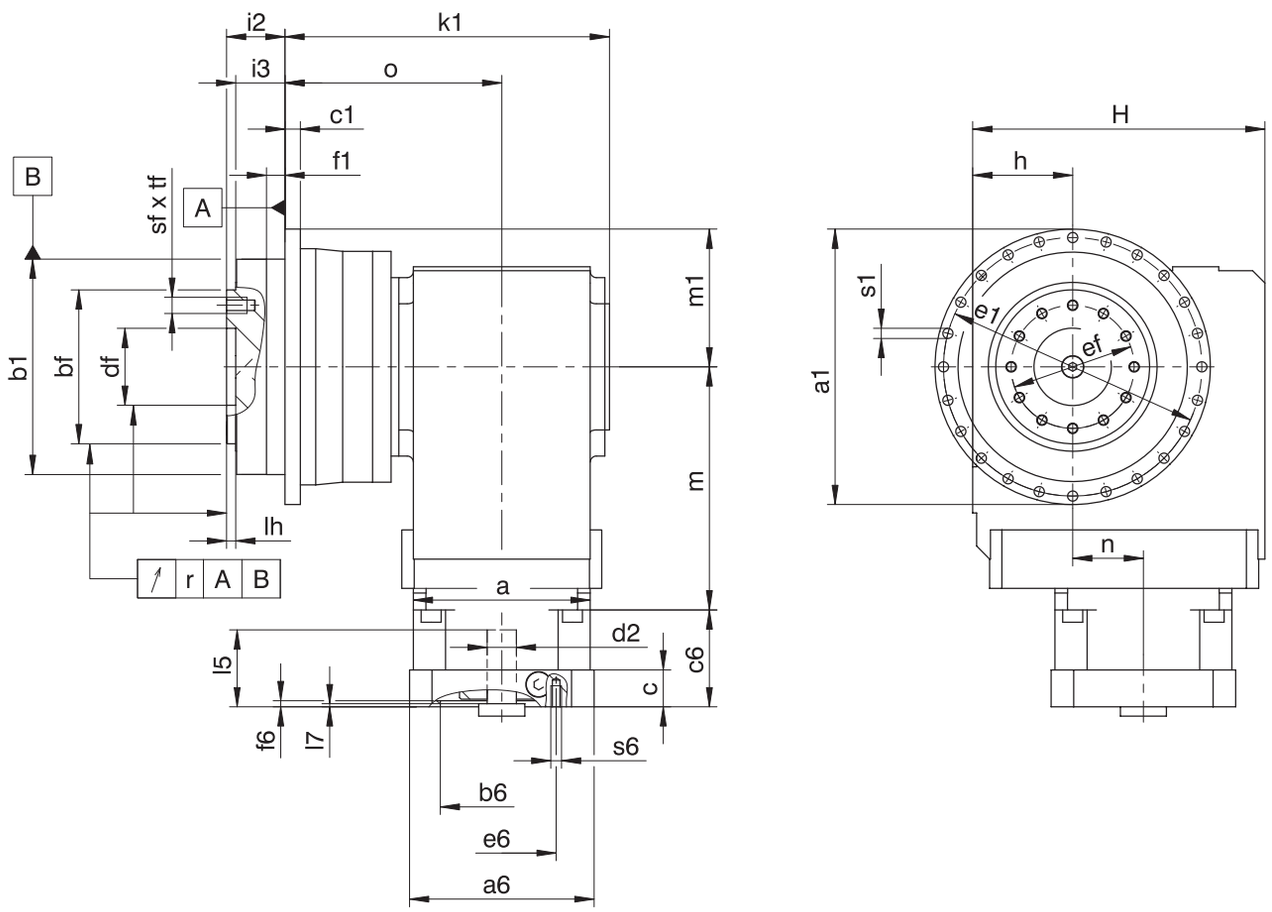

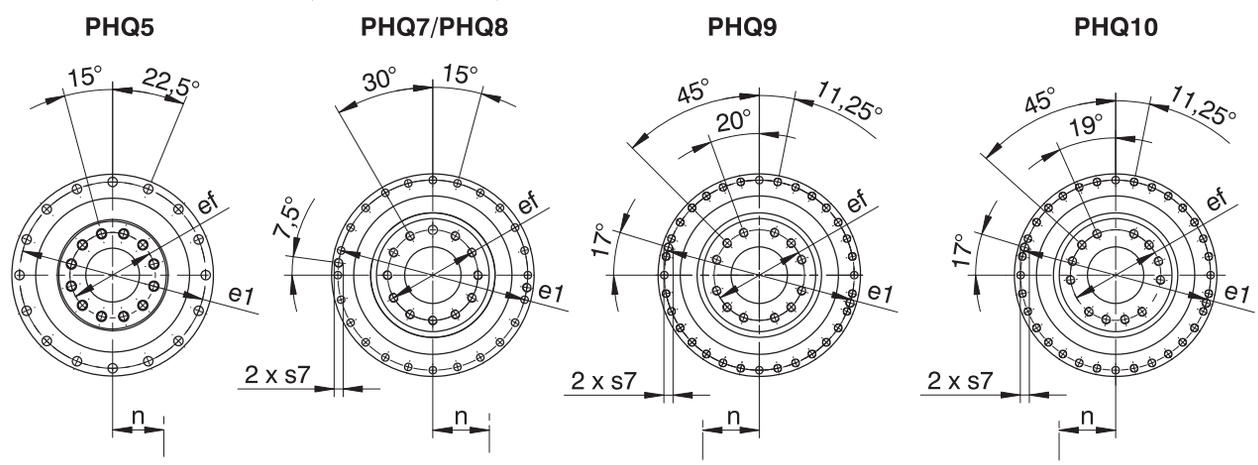

Dimensions of gear units

Type	Øa1	Øb1	Øbf	c1	Ødf	Øe1	Øef	f1	h	H	i2	i3	k1	lh	m1	o	r	Øs1	s7	sf	tf
PHQ531_K102_	145	110_{h7}	80_{h7}	8	40^{H6}	135	63	10	60	160	29	23	180.0	6	72.5	124.0	0.020	5.5	–	M8	11
PHQ731_K202_	179	140_{h7}	100_{h7}	10	50^{H6}	168	80	12	65	190	38	32	216.0	6	89.5	146.0	0.025	6.6	–	M10	16
PHQ831_K402_	247	200_{h7}	160_{h7}	12	80^{H6}	233	125	15	90	240	50	42	289.0	8	123.5	199.0	0.030	9.0	M10	M12	17
PHQ931_K513_	300	255_{h7}	180_{h7}	18	90^{H6}	280	145	20	160	260	66	55	292.5	12	150.0	196.5	0.030	13.5	M8	M20	28
PHQ1031_K713_	330	285_{h7}	200_{h7}	20	95^{H6}	310	166	20	212	342	75	60	344.5	10	165.0	228.0	0.040	13.5	M10	M24	35

Type	ME10			ME20			ME30			ME40			ME50		
	a	m	n	a	m	n	a	m	n	a	m	n	a	m	n
PHQ531_K102_	□98	124	36	□115	128	36	–	–	–	–	–	–	–	–	–
PHQ731_K202_	□98	143	46	□115	147	46	□145	149	46	–	–	–	–	–	–
PHQ831_K402_	–	–	–	∅160	187	60	□145	189	60	□190	192	60	–	–	–
PHQ931_K513_	–	–	–	∅160	172	15	□145	174	15	□190	177	15	–	–	–
PHQ1031_K713_	–	–	–	–	–	–	∅200	221	20	□190	224	20	∅300	237	20

Example dimensions for the motor connection

Type	Øb6	Øe6	Ød2max	l5	□a6	c	c6	f6	l7	s6
PHQ_K_ME10	95^{H7}	115	19	41	100	21	61.0	4.0	3.0	M8
PHQ_K_ME20	110^{H7}	130	32	53	120	24	74.0	4.0	3.5	M8
PHQ_K_ME30	130^{H7}	165	38	62	150	26	86.0	5.5	4.5	M10
PHQ_K_ME40	180^{H7}	215	48	82	204	35	123.0	5.5	5.5	M12
PHQ_K_ME50	180^{H7}	215	60	86	230	43	124.5	6.0	5.0	M12

In the table above, you will find example dimensions for the motor connection for the ME motor adapter. **Note that when dimension c is lengthened (depending on the motor used), dimensions c6, l5 and lg are also lengthened accordingly.**

You will find additional motor connection dimensions for the ME motor adapter in our STOBER Configurator at http://configurator.stoeber.de. Here, you can directly download a 3D model of your drive.

14.3.2 PHQ11K – PHQ12K F shaft design (flange shaft)

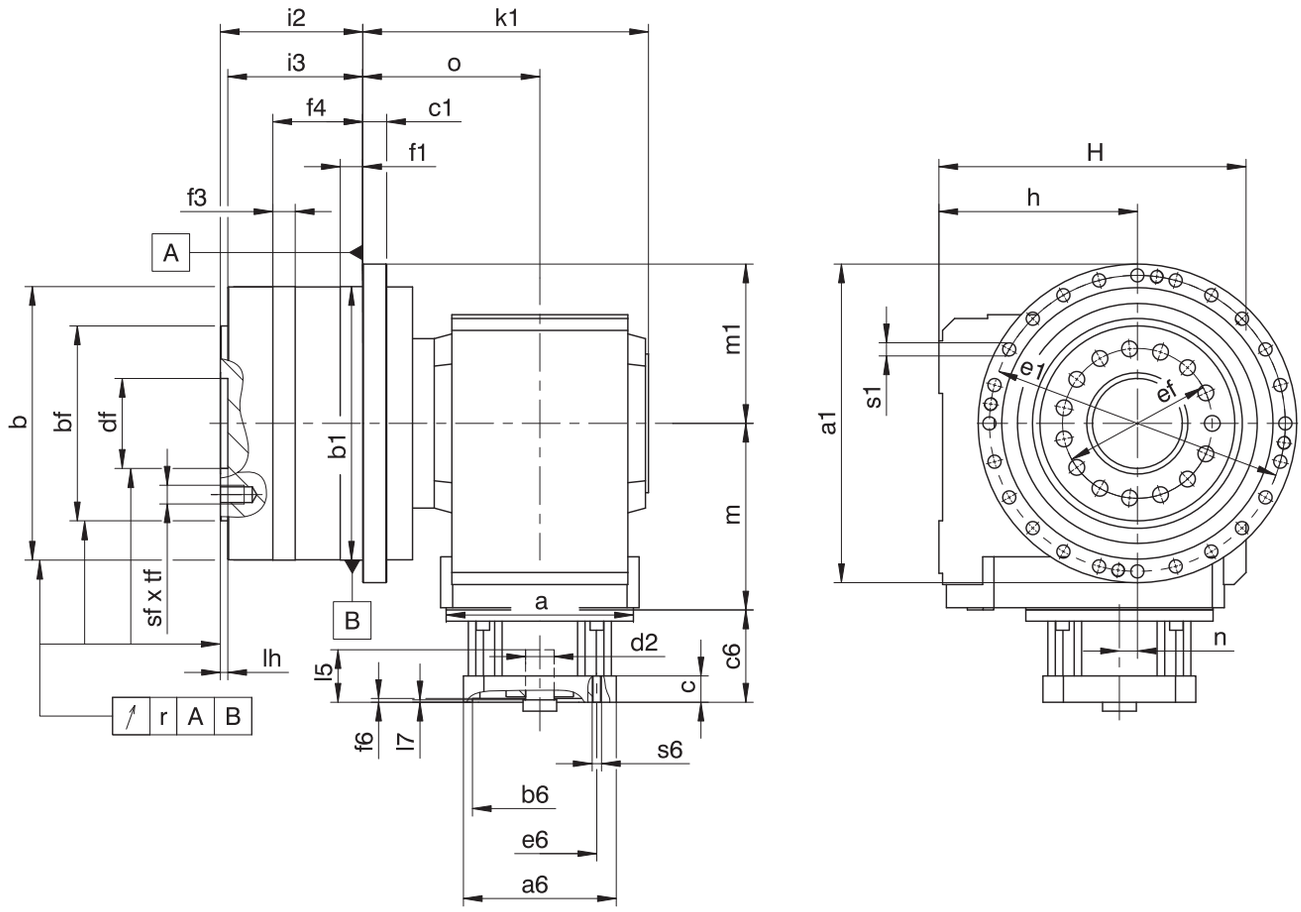

PHQ11

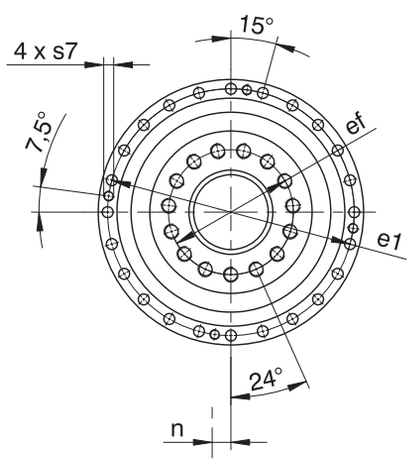

PHQ12

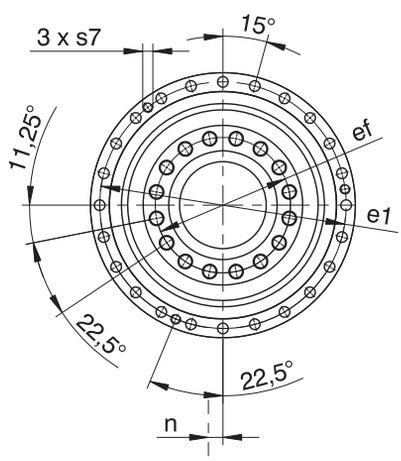

Dimensions of gear units

Type	Øa1	Øb	Øb1	Øbf	c1	Ødf	Øe1	Øef	f1	f3	f4	h	H	i2	i3	k1	lh	m1	o	r	Øs1	s7	sf	tf
PHQ1131_K813_	425	365_{g6}	365_{h6}	260_{h7}	32	120^{H6}	395	200	30	30	120	265	410	190	180	381.5	10	212.5	236.5	0.040	17.5	M16	M24	35.5
PHQ1231_K913_	550	470_{g6}	470_{h6}	330_{h7}	45	180^{H7}	510	280	30	30	145	315	495	206.5	195.5	452.0	10	275.0	282.0	0.040	22.0	M16	M30	48
PHQ1231_K914_	550	470_{g6}	470_{h6}	330_{h7}	45	180^{H7}	510	280	30	30	145	315	495	206.5	195.5	452.0	10	275.0	282.0	0.040	22.0	M16	M30	48

Type	ME30			ME40			ME50		
	a	m	n	a	m	n	a	m	n
PHQ1131_K813_	∅200	247	24	∅250	249	24	∅300	262	24
PHQ1231_K913_	–	–	–	∅250	294	25	∅300	307	25
PHQ1231_K914_	∅200	353	25	∅250	365	25	–	–	–

Example dimensions for the motor connection

Type	Øb6	Øe6	Ød2max	l5	□a6	c	c6	f6	l7	s6
PHQ_K_ME30	130^{H7}	165	38	62	150	26	86.0	5.5	4.5	M10
PHQ_K_ME40	180^{H7}	215	48	82	204	35	123.0	5.5	5.5	M12
PHQ_K_ME50	180^{H7}	215	60	86	230	43	124.5	6.0	5.0	M12

In the table above, you will find example dimensions for the motor connection for the ME motor adapter. **Note that when dimension c is lengthened (depending on the motor used), dimensions c6, l5 and lg are also lengthened accordingly.**

You will find additional motor connection dimensions for the ME motor adapter in our STOBER Configurator at http://configurator.stoeber.de. Here, you can directly download a 3D model of your drive.

14.4 Type designation

14.4.1 Type designation PHQ5K_ – PHQ8K_

In this chapter, you can find an explanation of the type designation with the associated options.

Additional ordering information not included in the type designation can be found at the end of the chapter.

Example code

PHQ	**7**	**3**	**1**	**S**	**F**	**S**	**S**	**0055**	**K202VF**	**0115**	**ME20**

Explanation

Code	Designation	Design
PHQ	Type	Planetary gear unit
7	Size	7 (example)
3	Generation	Generation 3
1	Stages	Single-stage
S	Housing	Standard
F	Shaft	Flange shaft
S V	Bearing	Standard bearing Reinforced bearing (PHQ4 – PHQ5)
S R	Backlash	Standard Reduced
0055	Transmission ratio of output (i x 10)	i = 5.5 (example)
K202VF	Input	K2 right-angle geared motor (example)
0115	Transmission ratio of input (i x 10 rounded)	i = 11.57 (example)
ME20 MQ MB[1]	Motor adapter	ME20 motor adapter (example) with EasyAdapt coupling Square motor adapter with backlash-free plug-in coupling ServoStop motor adapter with brake

In order to complete the type designation, also specify:

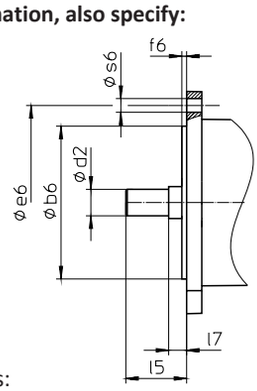

- Motor type or motor dimensions:

  To choose a suitable motor connection, use the STOBER Configurator at http://configurator.stoeber.de and choose your motor or the dimensions of the motor connection.
- For the mounting position, see the chapter [▸ 14.5.5]
- The position of locking screw access, see the chapter [▸ 14.5.7]
- Output gear unit side 3 or 4, see the chapter [▸ 14.5.5]
- Radial shaft seal rings at the output made of NBR or FKM (option), see the chapter [▸ 14.6.4]
- Reverse operation of the output shaft from ±20° to ±90° and horizontal installation, note the chapter [▸ 14.6.5]
- Pinion lock for motor adapter (optional)
- Double seal for ME motor adapter (optional)

[1] You can find more details in the catalog for ServoStop servo gear unit with brake ID 443234.

14.4.2 Type designation PHQ9K_ – PHQ12K_

In this chapter, you can find an explanation of the type designation with the associated options.

Additional ordering information not included in the type designation can be found at the end of the chapter.

Example code

PHQ	9	3	1	F	0060	K513VF	0115	ME30

Explanation

Code	Designation	Design
PHQ	Type	Planetary gear unit
9	Size	9 (example)
3	Generation	Generation 3
1	Stages	Single-stage
F	Shaft	Flange shaft
0060	Transmission ratio of output (i x 10)	i = 6 (example)
K513VF	Input	K5 right-angle gear unit (example)
0115	Transmission ratio of input (i x 10 rounded)	i = 11.55 (example)
ME30 MQ MB[2]	Motor adapter	ME30 motor adapter (example) with EasyAdapt coupling Square motor adapter with backlash-free plug-in coupling ServoStop motor adapter with brake

In order to complete the type designation, also specify:

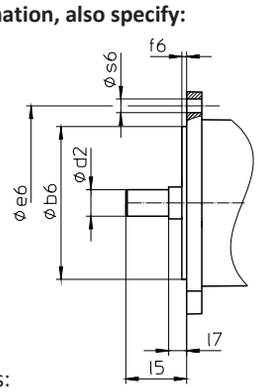

- Motor type or motor dimensions:

  To choose a suitable motor connection, use the STOBER Configurator at http://configurator.stoeber.de and choose your motor or the dimensions of the motor connection.
- For the mounting position, see the chapter [▸ 14.5.5]
- The position of locking screw access, see the chapter [▸ 14.5.7]
- Output gear unit side 3 or 4, see the chapter [▸ 14.5.5]
- Radial shaft seal rings at the output made of NBR or FKM (option), see the chapter [▸ 14.6.4]
- Reverse operation of the output shaft from ±20° to ±90° and horizontal installation, note the chapter [▸ 14.6.5]
- Pinion lock for motor adapter (optional)
- Double seal for ME motor adapter (optional)

[2] You can find more details in the catalog for ServoStop servo gear unit with brake ID 443234.

14.4.3 Nameplate

An example gear unit nameplate is explained in the figure below.

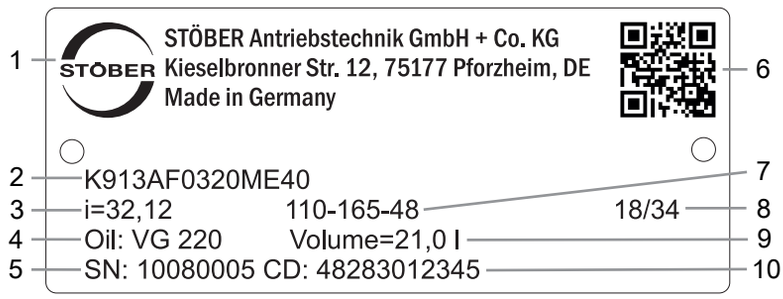

Code	Designation
1	Name of manufacturer
2	Type designation
3	Gear ratio of the gear unit
4	Lubricant specification
5	Serial number of the gear unit
6	QR code (link to product information)
7	Dimensions of the motor adapter (pilot/bolt circle/motor shaft diameter)
8	Date of manufacture (year/calendar week)
9	Lubricant fill volume
10	Customer-specific data

14.5 Product description

14.5.1 Input options

ME motor adapter for attaching synchronous servo motors

http://www.stoeber.de/en/PHQKME

MB motor adapter with brake for attaching synchronous servo motors

http://www.stoeber.de/en/PHQKMB

EZ synchronous servo motor

http://www.stoeber.de/en/PHQKEZ

14.5.2 Motor adapter with EasyAdapt coupling (ME)

In this chapter, you will find a description of the EasyAdapt coupling.

Properties:

- Fast and easy motor attachment
- Rugged clamp coupling with expanding function
- Lowest mass moments of inertia for the highest dynamics
- Balanced for smooth running without vibration, even at high speeds
- Large motor shaft diameter range
- Error-free, thanks to exact centering of the motor

Fig. 1: EasyAdapt coupling

14.5.3 Square motor adapter with backlash-free plug-in coupling (MQ)

In this chapter, you will find a description of the backlash-free plug-in coupling (jaw coupling).

Properties:

- Fast and easy motor attachment
- Removal of the motor possible in any position
- With integrated thermal length compensation, compensates for linear expansion of the motor shaft
- Motor shaft decoupled from axial forces
- Balanced for smooth running without vibration, even at high speeds
- Large motor shaft diameter range
- Error-free, thanks to exact centering of the motor

Fig. 2: Backlash-free plug-in coupling

For all technical data and combinations with our gear units, refer to http://configurator.stoeber.de.

14.5.4 Installation conditions

The torque and force values listed in this catalog are valid under the following conditions:

- When the flange shaft and gear housing are fastened on the machine side using screws of strength class 12.9
- When the gear housings are adjusted at pilot øb1. The machine-side fit must be H7.
- When the flange shaft is adjusted using the connecting element at pilot øbf or ødf

14.5.5 Mounting positions

The following table shows the standard mounting positions.

The numbers identify the gear unit sides. The mounting position is defined by the gear side facing downwards.

PHQ5K1 – PHQ8K4

EL1	EL2	EL3
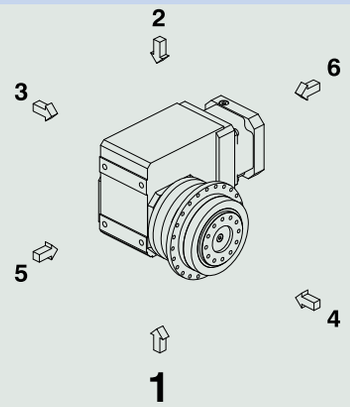	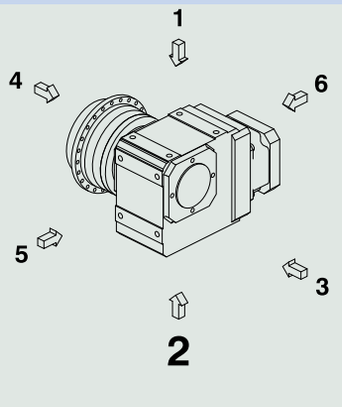	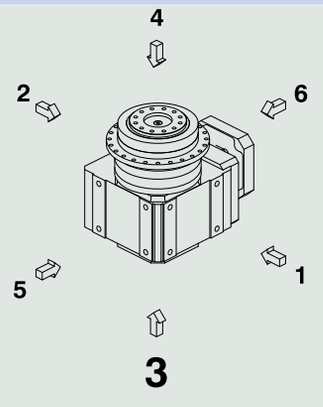
EL4	**EL5**	**EL6**
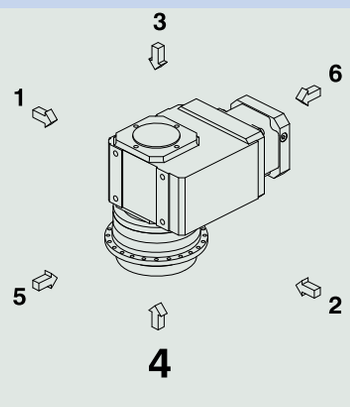	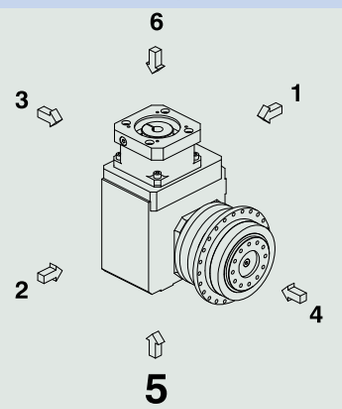	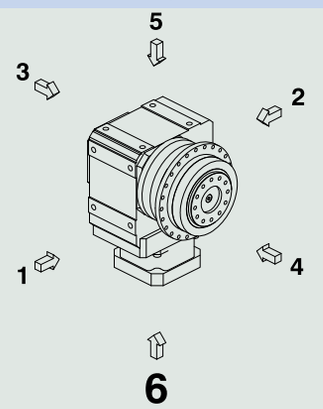

PHQ9K5 – PHQ12K9

EL1	EL2	EL3
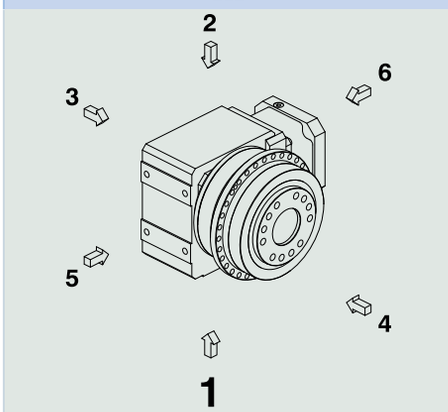	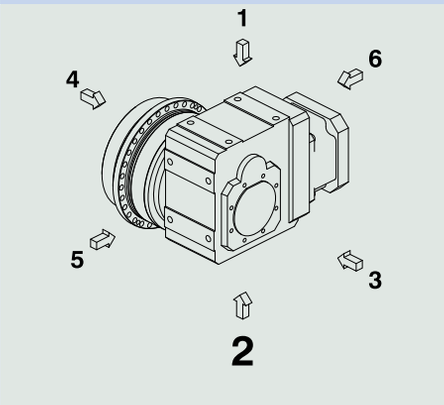	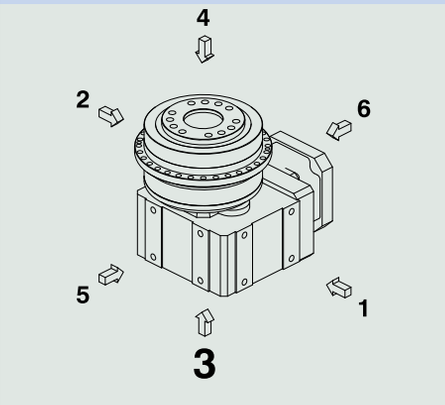
EL4	**EL5**	**EL6**
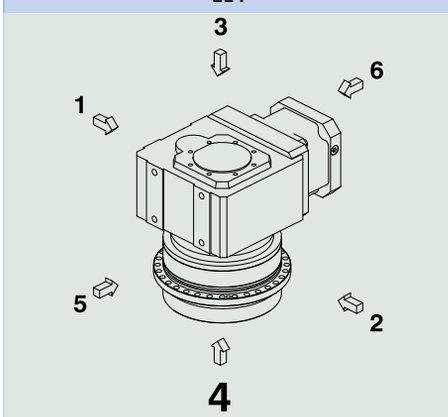	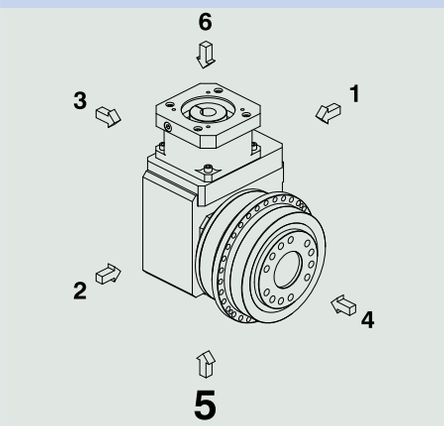	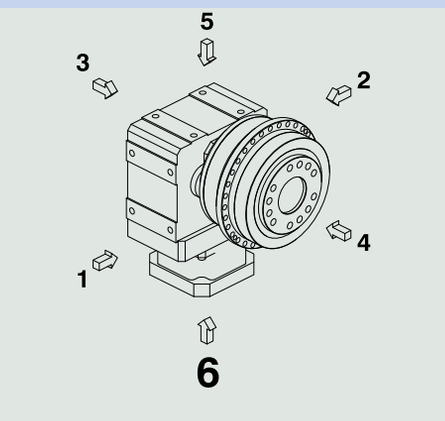

Since the lubricant filling volume of the gear unit depends on the mounting position, the mounting position must be specified when ordering.

14.5.6 Lubricants

STOBER fills the gear units with the amount and type of lubricant specified on the nameplate. The filling volume and the structure of the gear units depend on the mounting position.

Only install the gear units in the intended mounting position! Reposition the gear units only after consulting STOBER. Otherwise, STOBER assumes no liability for the gear units.

You will receive lubricants for use in the food industry upon request.

14.5.7 Position of locking screw access

Mounting position EL1	Mounting position EL4
Locking screw in 270° position (standard)	Locking screw in 270° position (standard)
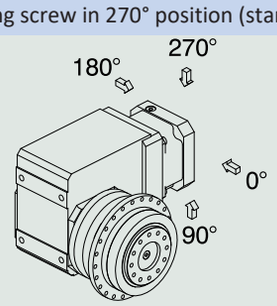	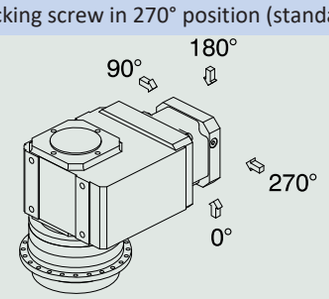

Indicate variations for your gear unit in the order.

Note that the access hole for the locking screw also rotates when the gear unit is rotated to another mounting position.

14.5.8 Other product features

Feature	Value
Max. permitted gear unit temperature (on the surface of the gear unit)	≤ 90 °C
Paint	Black RAL 9005
Explosion-proof design in accordance with (ATEX) Directive 2014/34/EU (optional)	Available, see Document ID 441677_en
Efficiency: η_{get} three-stage η_{get} four-stage η_{get} five-stage	 93% 92% 90%
Protection class: [3]	IP65

14.5.9 Direction of rotation

Output side 4	Output side 3
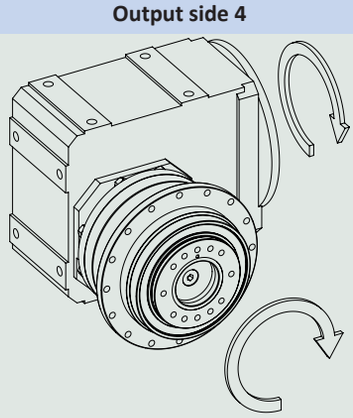	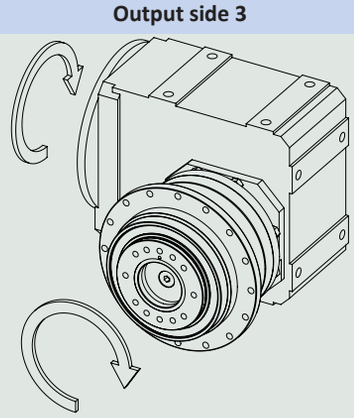

The pictures show mounting position EL1.

14.6 Project configuration

Project your drives using our SERVOsoft designing software. Download SERVOsoft for free at https://www.stoeber.de/en/ServoSoft.

Observe the limit conditions in this chapter to ensure a safe design for your drives.

An explanation of the formula symbols can be found in the chapter [▸ 18.1].

[3] Observe the protection class of all the components.

14.6.1 Drive selection

The formula symbols for values actually present in the application are marked with *.

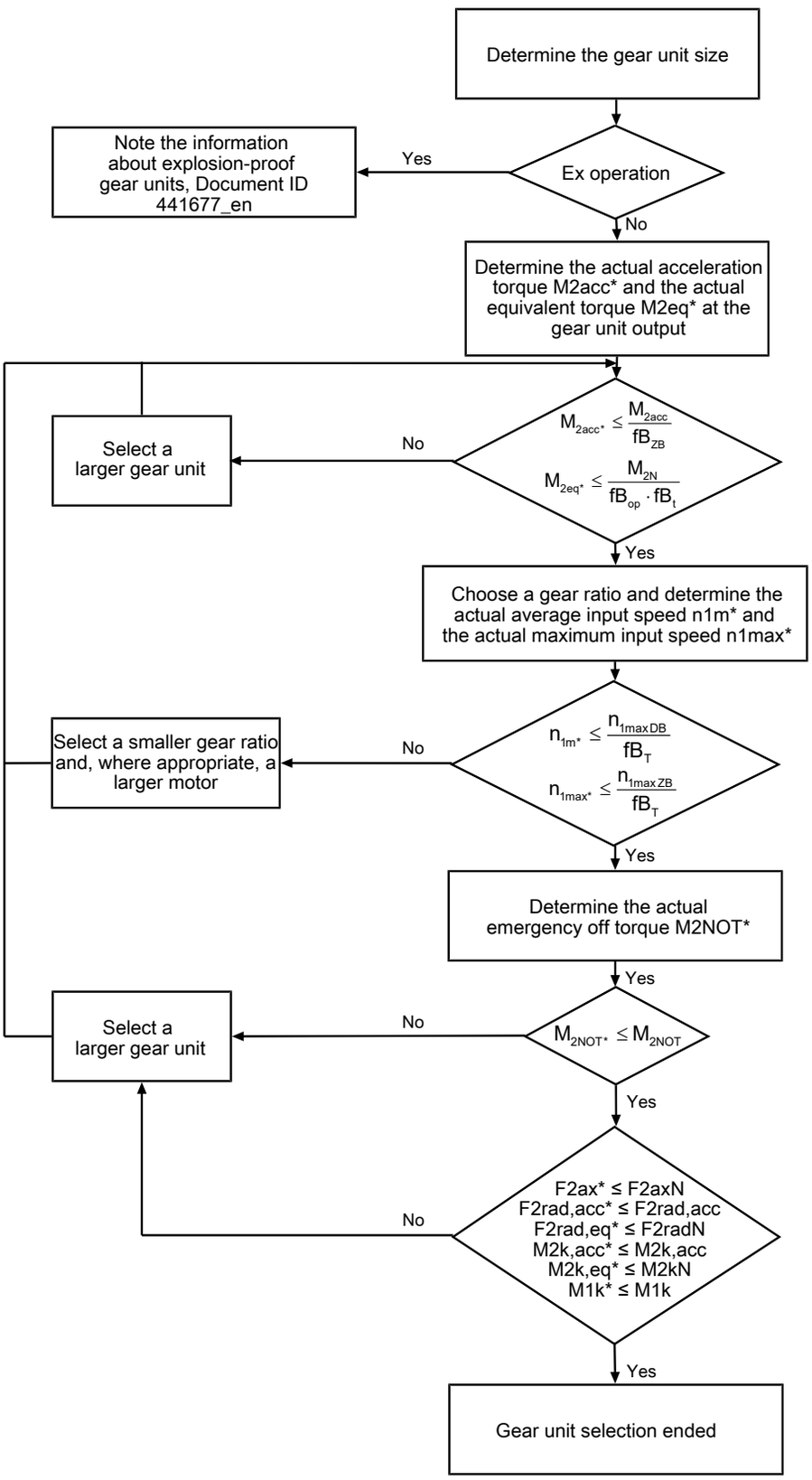

Calculate the forces and tilting torques in the chapter Permitted shaft loads.

Refer to the selection tables for the values for i, n_{1maxDB}, n_{1maxZB}, M_{2acc} (M_{2accHT} for reduced backlash), M_{2NOT} and M_{2N}.

The values for fB_T, fB_{op}, fB_t and fB_{ZB} can be found in the corresponding tables in this chapter.

Example of cyclic operation

The following calculations are based on a representation of the power taken from the output based in accordance with the following example:

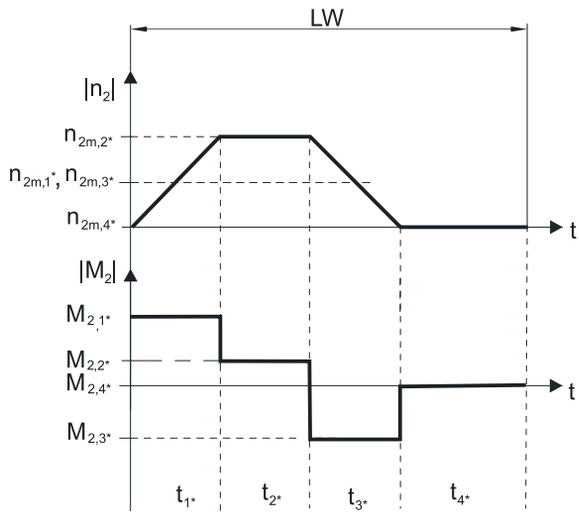

Calculation of the actual maximum acceleration torque

$$M_{2acc*} = J_{tot} \cdot \frac{\Delta n_2}{9.55 \cdot \Delta t} + M_{L*}$$

Calculation of the actual average input speed

$$n_{1m*} = n_{2m*} \cdot i$$

$$n_{2m*} = \frac{|n_{2m,1*}| \cdot t_{1*} + \ldots + |n_{2m,n*}| \cdot t_{n*}}{t_{1*} + \ldots + t_{n*}}$$

If $t_{1*} + \ldots + t_{3*} \geq 6$ min, calculate n_{2m*} without the rest phase t_{4*}.

The values for the ratio i can be found in the selection tables.

Calculation of the actual emergency-off torque

$$M_{2NOT*} = J_{tot} \cdot \frac{\Delta n_2}{9.55 \cdot \Delta t} + M_{L*}$$

Calculation of the actual equivalent torque

$$M_{2eq*} = \sqrt[3]{\frac{|n_{2m,1*}| \cdot t_{1*} \cdot |M_{2,1*}{}^3| + \ldots + |n_{2m,n*}| \cdot t_{n*} \cdot |M_{2,n*}{}^3|}{|n_{2m,1*}| \cdot t_{1*} + \ldots + |n_{2m,n*}| \cdot t_{n*}}}$$

Operating factors

Operating mode	fB_{op}
Uniform continuous operation	1.00
Cyclic operation	1.25
Reversing load cyclic operation	1.40

Run time	fB_t
Daily runtime ≤ 8 h	1.00
Daily runtime ≤ 16 h	1.15
Daily runtime ≤ 24 h	1.20

Cyclic operation	fB_{ZB}
≤ 1000 load changes/hour (LW/h)	1.00
> 1000 load changes/hour (LW/h)	1.15

Temperature		fB_T
Motor cooling	**Surrounding temperature**	
Motor with forced ventilation	≤ 20 °C	0.9
	≤ 30 °C	1.0
	≤ 40 °C	1.15
Motor with convection cooling	≤ 20 °C	1.0
	≤ 30 °C	1.1
	≤ 40 °C	1.25

Notes

- The maximum permitted gear unit temperature of ≤ 90 °C must not be exceeded. Doing so may result in damage to the gear unit.

14.6.2 Permitted shaft loads for the output shaft

The values specified in the tables apply to the permitted shaft loads:

- For shaft dimensions in accordance with the catalog
- For output speeds n_{2m*} ≤ 100 rpm ($F^{2axN} = F_{2ax100}$; $F_{2radN} = F_{2rad100}$; $M_{2kN} = M_{2k100}$)
- Only if radial forces on the gear unit are stabilized by its pilots (housing, flange shaft)

Permitted shaft loads for standard bearing S

Type	z_2 [mm]	F_{2ax100} [N]	$F_{2rad100}$ [N]	$F_{2rad,acc}$ [N]	M_{2k100} [Nm]	$M_{2k,acc}$ [Nm]	C_{2k} [Nm/arcmin]
PHQ4	83.0	2150	3095	3929	257	326	160
PHQ5	97.0	4150	4536	4897	440	475	380
PHQ7	86.0	6150	17045	17045	1466	1466	500
PHQ8	125.5	10050	27778	33333	3486	4183	1550
PHQ9	155.0	33000	48387	70968	7500	11000	7500
PHQ10	171.0	50000	51462	73099	8800	12500	9500
PHQ11	231.0	60000	47619	60606	11000	14000	11500
PHQ12	281.0	70000	53380	71040	15000	20000	14000

Permitted shaft loads for reinforced bearing V

Type	z_2 [mm]	F_{2ax100} [N]	$F_{2rad100}$ [N]	$F_{2rad,acc}$ [N]	M_{2k100} [Nm]	$M_{2k,acc}$ [Nm]	C_{2k} [Nm/arcmin]
PHQ4	88.5	2900	4000	4000	354	354	160
PHQ5	104.0	5000	5500	5500	572	572	380

For other output speeds, download diagrams at http://configurator.stoeber.de.

The following applies to output speeds n_{2m*} > 100 rpm:

$$F_{2axN} = \frac{F_{2ax100}}{\sqrt[3]{\frac{n_{2m*}}{100\ \text{rpm}}}} \qquad F_{2radN} = \frac{F_{2rad100}}{\sqrt[3]{\frac{n_{2m*}}{100\ \text{rpm}}}} \qquad M_{2kN} = \frac{M_{2k100}}{\sqrt[3]{\frac{n_{2m*}}{100\ \text{rpm}}}}$$

The values for F_{2ax100}, $F_{2rad100}$ and M_{2k100} can be found in the table "Permitted shaft loads" in this chapter.

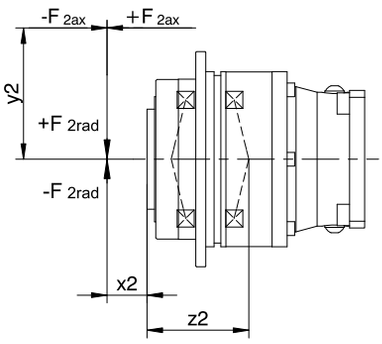

Fig. 3: Force application points

You can determine the permitted radial forces from the permitted breakdown torque M_{2kN} and $M_{2k,acc}$. The actual radial forces may not exceed the permitted radial forces. The permitted radial forces pertain to the shaft end (x2 = 0).

$$M_{2k,acc*} = \frac{2 \cdot F_{2ax*} \cdot y_2 + F_{2rad,acc*} \cdot (x_2 + z_2)}{1000} \leq M_{2k,acc}$$

For applications with multiple axial and/or radial forces, you must add the forces as vectors.

In the event of EMERGENCY OFF operation (max. 1000 load changes), you can multiply the permitted forces and torques for F_{2ax100}, $F_{2rad100}$ and M_{2k100} by a factor of two.

Also note the calculation for equivalent values:

$$M_{2k,eq*} = \sqrt[3]{\frac{|n_{2m,1*}| \cdot t_{1*} \cdot |M_{2k,acc,1*}{}^3| + \ldots + |n_{2m,n*}| \cdot t_{n*} \cdot |M_{2k,acc,n*}{}^3|}{|n_{2m,1*}| \cdot t_{1*} + \ldots + |n_{2m,n*}| \cdot t_{n*}}} \leq M_{2kN}$$

$$F_{2rad,eq*} = \sqrt[3]{\frac{|n_{2m,1*}| \cdot t_{1*} \cdot |F_{2rad,acc,1*}{}^3| + \ldots + |n_{2m,n*}| \cdot t_{n*} \cdot |F_{2rad,acc,n*}{}^3|}{|n_{2m,1*}| \cdot t_{1*} + \ldots + |n_{2m,n*}| \cdot t_{n*}}} \leq F_{2radN}$$

$$F_{2ax,eq*} \leq F_{2axN}$$

The following apply to the bearing service life L_{10h} (ED_{10} ≤ 40%):

L_{10h} > 10000 h with 1 < M_{2kN}/M_{2k*} < 1.25

L_{10h} > 20000 h with 1.25 < M_{2kN}/M_{2k*} < 1.5

L_{10h} > 30000 h with 1.5 < M_{2kN}/M_{2k*}

For different duty cycles:

$$L_{10h} > L_{10h(ED_{10}=40\%)} \cdot \frac{40\%}{ED_{10}}$$

14.6.3 Permitted breakdown torques at the gear unit input

For a horizontal mounting position of the motor, verify that the permitted breakdown torque at the gear unit input is not exceeded before installation on a STOBER gear unit. You can find information for how to do that in this chapter.

Calculate the actual breakdown torque as follows:

$M_{1k*} = F_{1k*} \bullet l_{sp} \leq M_{1k}$

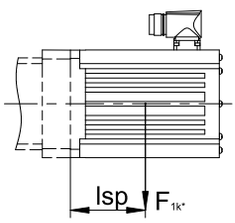

Type	M_{1k} [Nm]
ME10	25
ME20	60
ME30	125
ME40	250
ME50	600

14.6.4 Recommendation for radial shaft seal rings

For a duty cycle > 60% and higher surrounding temperatures, we recommend radial shaft seal rings made of FKM at the output.

Properties:

- Excellent temperature resistance
- High chemical stability
- Very good resistance to aging
- Excellent resistance in oils and greases
- For use in the food, beverage and pharmaceutical industries

Leak-proofness

Our gear units are equipped with high-quality radial shaft seal rings and checked for leaks. However, a leak cannot be fully ruled out over the length of use of a gear unit. If you use a gear unit with goods incompatible with the lubricant, you must take measures to prevent direct contact with the gear unit lubricant in case of a leak.

14.6.5 Reverse operation

To ensure lubrication for circulating gearing parts during cyclic reverse operation from ± 20° to ± 90° at the output, pay careful attention to the position of the output shaft for the horizontal mounting of the gear unit, as shown in the diagrams below.

The images show the center position of reverse operation.

Cyclic reverse operation ≤ ± 20° on request.

PHQ4 – PHQ12

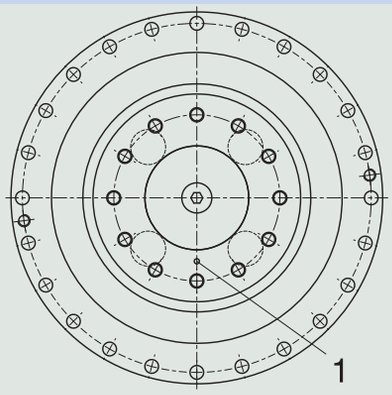

1 Position of the mark: bottom

Please note that the hole pattern may be different, depending on the size of the planetary gear unit.

14.7 Additional documentation

Additional documentation related to the product can be found at
http://www.stoeber.de/en/downloads/

Enter the ID of the documentation in the Search... field.

Documentation	ID
Operating manual for KL/KS/PHK/PHKX/PHQK/PK/PKX right-angle servo gear units and right-angle servo geared motors	443150_en
Operating manual for explosion-proof KL/KS/PHK/PHKX/PHQK/PK/PKX right-angle gear units	443005_en
Information explosion-proof gear units	441677_en

15 KL helical bevel gear units

Table of contents

15.1 Overview ... 316

15.2 Selection tables ... 317

15.3 Dimensional drawings ... 319

15.3.1 A shaft design (hollow shaft), G housing design (pitch circle diameter) ... 320

15.3.2 A shaft design (hollow shaft), NG housing design (foot + pitch circle diameter) ... 322

15.3.3 A shaft design (hollow shaft), F housing design (flange) ... 324

15.3.4 G shaft design (solid shaft without feather key), G housing design (pitch circle diameter) ... 326

15.3.5 G shaft design (solid shaft without feather key), NG housing design (foot + pitch circle diameter) ... 327

15.3.6 G shaft design (solid shaft without feather key), F housing design (flange) ... 328

15.3.7 P shaft design (solid shaft with feather key), G housing design (pitch circle diameter) ... 329

15.3.8 P shaft design (solid shaft with feather key), NG housing design (foot + pitch circle diameter) ... 330

15.3.9 P shaft design (solid shaft with feather key), F housing design (flange) ... 331

15.3.10 S shaft design (hollow shaft with shrink ring), G housing design (pitch circle diameter) ... 332

15.3.11 S shaft design (hollow shaft with shrink ring), NG housing design (foot + pitch circle diameter) ... 334

15.3.12 S shaft design (hollow shaft with shrink ring), F housing design (flange) ... 336

15.4 Type designation ... 338

15.4.1 Nameplate ... 339

15.5 Product description ... 339

15.5.1 Input options ... 339

15.5.2 Square motor adapter with backlash-free plug-in coupling (MQ) ... 340

15.5.3 Housing design ... 340

15.5.4 Combinatorial shaft/housing design ... 340

15.5.5 Installation conditions ... 341

15.5.6 Gear unit sides ... 341

15.5.7 Lubricants ... 341

15.5.8 Position of locking screw access ... 342

15.5.9 Other product features ... 342

15.5.10 Direction of rotation ... 343

15.6 Project configuration ... 343

15.6.1 Drive selection ... 344

15.6.2 Permitted shaft loads for the output shaft ... 346

15.6.3 Permitted breakdown torques at the gear unit input ... 348

15.6.4 Radial shaft seal rings ... 348

15.7 Additional documentation ... 348

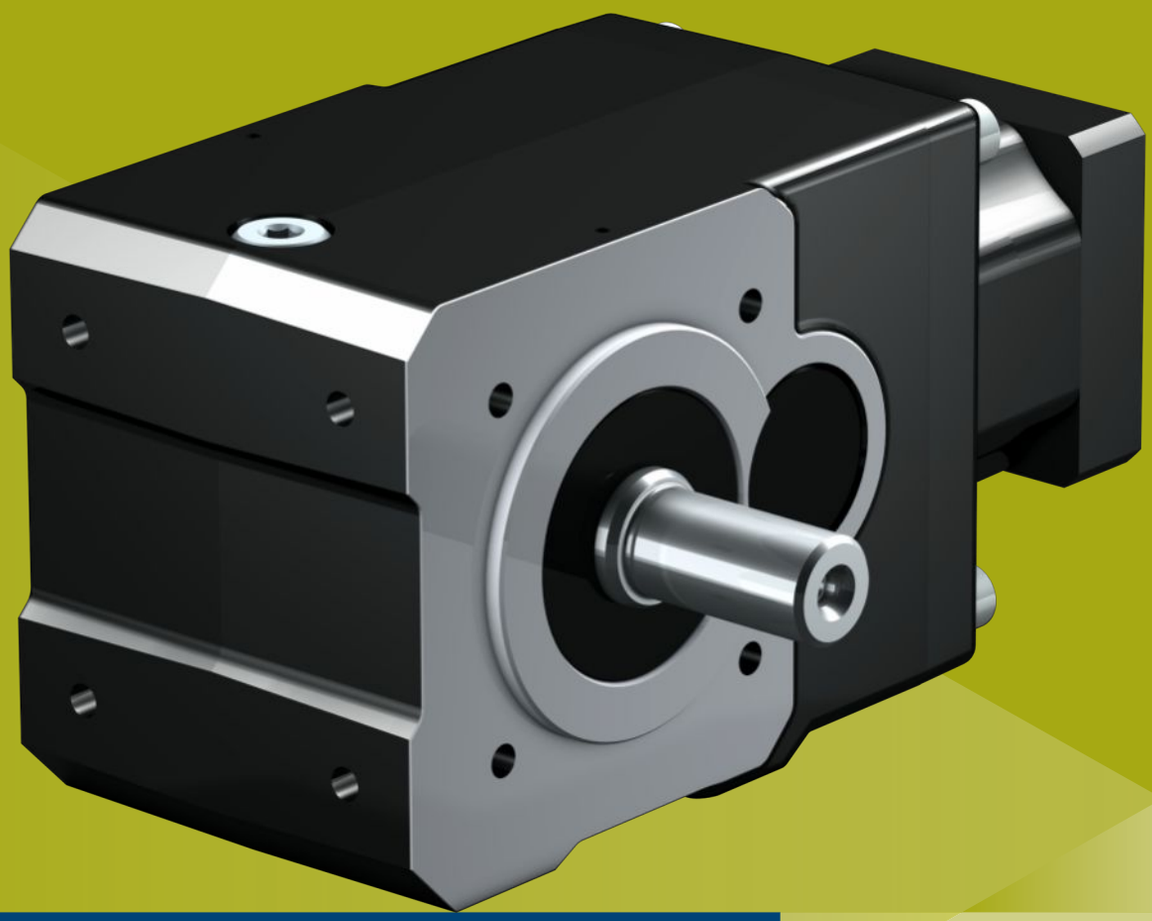

15 Helical bevel gear units KL

15.1 Overview

Compact, helical-geared right-angle gear units

Features

Power density	★★☆☆☆
Backlash	★☆☆☆☆
Price category	€
Shaft load	★★☆☆☆
Smooth operation	★★☆☆☆
Torsional stiffness	★★☆☆☆
Mass moment of inertia	★★★★☆
Helical gearing	✓
Maintenance-free	✓
Any mounting position	✓
Small installation space	✓
FKM seal ring at the input	✓
Easy and reliable attachment to any synchronous servo motor	✓

Key ★☆☆☆☆ good | ★★★★★ excellent
€ Economy | €€€€€ Premium

Technical data

i	4 – 32
M_{2acc}	22 – 65 Nm
$\Delta\phi_2$	16 – 25 arcmin
η_{get}	97 %

15.2 Selection tables

The technical data specified in the selection tables applies to:

- Installation altitudes up to 1000 m above sea level
- Surrounding temperatures from 0 °C to 40 °C
- Without consideration for thermal limiting performance

You can find the mass moment of inertia J_1 for smaller motor shaft diameters and all other technical data at http://configurator.stoeber.de.

An explanation of the formula symbols can be found in the chapter [▸ 18.1].

i	i_{exakt}	Type	n_{1MAXDB} EL1,2 [rpm]	n_{1MAXDB} EL3,4,5,6 [rpm]	n_{1MAXZB} [rpm]	J_1 [kgcm²]	m [kg]	d_{MW} [mm]	$\Delta\varphi_2$ [arcmin]	C_2 [Nm/arcmin]	M_{2N} [Nm]	M_{2acc} [Nm]	M_{2NOT} [Nm]
KL102 ($M_{2acc,max}$ = 32 Nm)													
4.000	4/1	KL102_0040 MQ	3500	3500	5000	0.40	6.2	≤16	25.0	1.0	15	22	29
8.000	8/1	KL102_0080 MQ	3500	3500	5000	0.37	6.2	≤16	20.0	1.6	25	30	58
16.00	16/1	KL102_0160 MQ	4000	4000	6000	0.31	6.2	≤16	20.0	1.8	25	30	60
32.00	32/1	KL102_0320 MQ	4000	4000	6000	0.30	6.2	≤16	20.0	1.7	25	32	64
KL202 ($M_{2acc,max}$ = 65 Nm)													
4.000	4/1	KL202_0040 MQ	3500	3500	5000	1.0	9.5	≤19	20.0	1.8	35	50	83
8.000	8/1	KL202_0080 MQ	3500	3500	5000	0.89	9.5	≤19	16.0	3.5	50	60	120
16.00	16/1	KL202_0160 MQ	4000	4000	6000	0.66	9.5	≤19	16.0	3.9	50	60	120
32.00	32/1	KL202_0320 MQ	4000	4000	6000	0.64	9.5	≤19	16.0	3.2	50	65	130

15.3 Dimensional drawings

In this chapter, you can find the dimensions of the gear units as well as example dimensions of the mountable motor adapters.

Dimensions can exceed the specifications of ISO 2768-mK due to casting tolerances or accumulation of individual tolerances.

We reserve the right to make dimensional changes due to ongoing technical development.

You can download 3D models of our standard drives at http://configurator.stoeber.de.

Tolerances

Axis height in accordance with DIN 747	Tolerance
Up to 50 mm	-0.4 mm
Up to 250 mm	-0.5 mm
Up to 630 mm	-0.6 mm

Solid shaft	Tolerance
Shaft ∅ fit ≤ 50 mm	DIN 748-1, ISO k6
Shaft ∅ fit > 50 mm	DIN 748-1, ISO m6
Feather keys	DIN 6885-1, high form A

Centering holes in solid shafts in accordance with DIN 332-2, DR shape

Thread size	M4	M5	M6	M8	M10	M12	M16	M20	M24
Thread depth [mm]	10	12.5	16	19	22	28	36	42	50

Hollow shaft	Tolerance
Hollow shaft hole fit	ISO G7
Feather keys	DIN 6885-1, high form

Flange	Pilot tolerance
Up to 300 mm	ISO j6
Starting at 350 mm	ISO h6

15.3.1 A shaft design (hollow shaft), G housing design (pitch circle diameter)

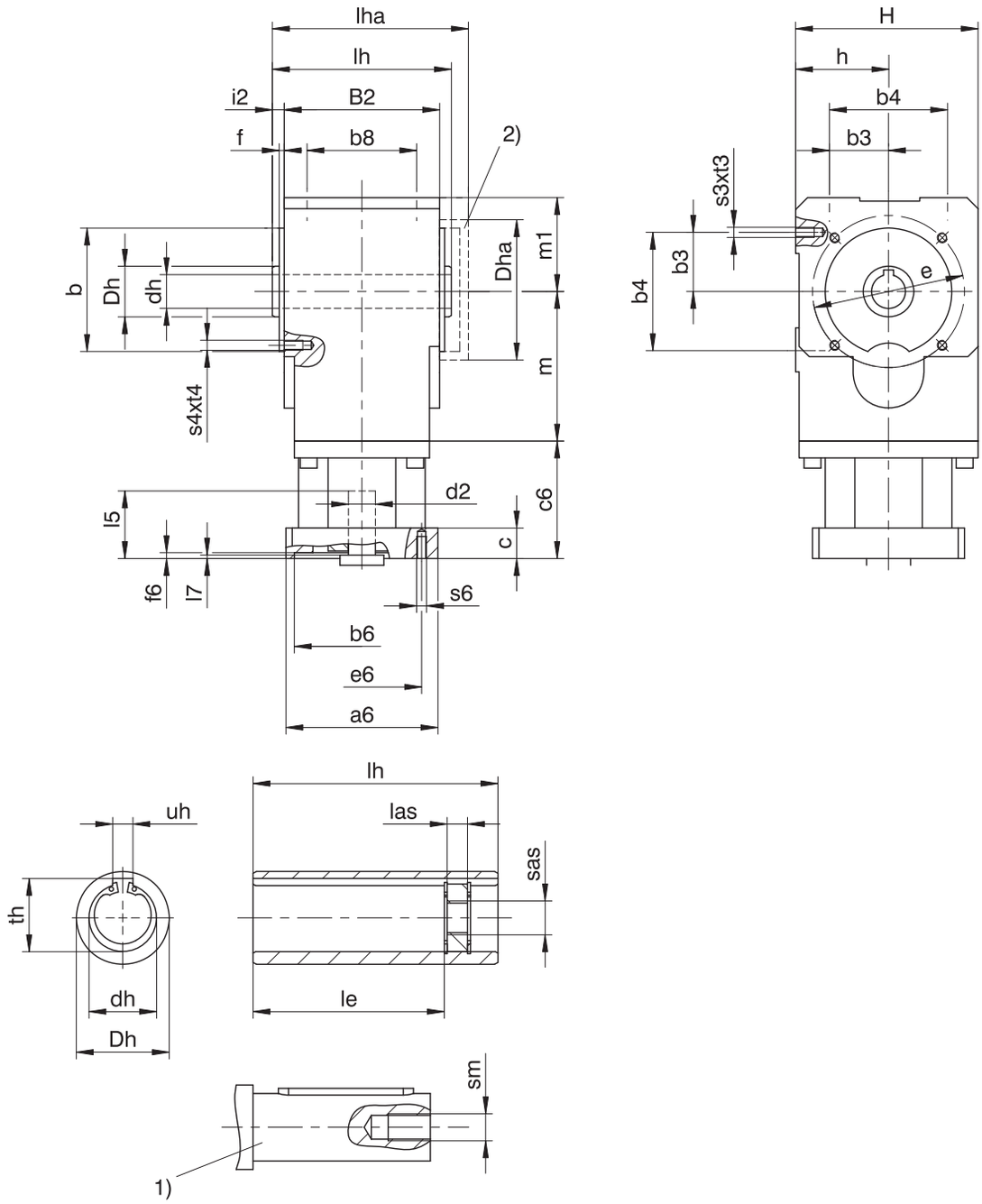

1) The length of the machine shaft must be at least 2.2 x ∅dh and the length of the feather key must be at least 2 x ∅dh.

2) Cover (optional)

Dimensions of gear units

Type	Øb	b3	b4	b8	B2	Ødh	ØDh	ØDha	Øe	f	h	H	i2	le	lh	las	lha	m	m1	s3	s4	sm	sas	t3	t4	th	uh
KL1	60_{j6}	27.5	55	50	75	16^{H7}	25	70	75	3	46	90	6	60.5	87	12	91	67.5	46	M6	M6	M5	M6	11	11	18.3	5^{JS9}
KL2	75_{j6}	35.0	70	65	92	20^{H7}	30	80	90	3	55	108	7	79.5	106	12	110	88.5	55	M6	M6	M6	M8	13	13	22.8	6^{JS9}

Example dimensions for the motor connection

Type	Øb6	Øe6	Ød2max	l5	□a6	c	c6	f6	l7	s6
KL1_MQ	40^{H7}	63	16	30	55	15	61.5	3.5	3	M5
KL2_MQ	60^{H7}	75	19	40	75	18	69.5	3.5	3	M5

In the table above, you will find example dimensions for the motor connection for the MQ motor adapter. **Note that when dimension c is lengthened (depending on the motor used), dimensions c6, l5 and lg are also lengthened accordingly.**

You will find additional motor connection dimensions for the MQ motor adapter in our STOBER Configurator at http://configurator.stoeber.de. Here, you can directly download a 3D model of your drive.

15.3.2 A shaft design (hollow shaft), NG housing design (foot + pitch circle diameter)

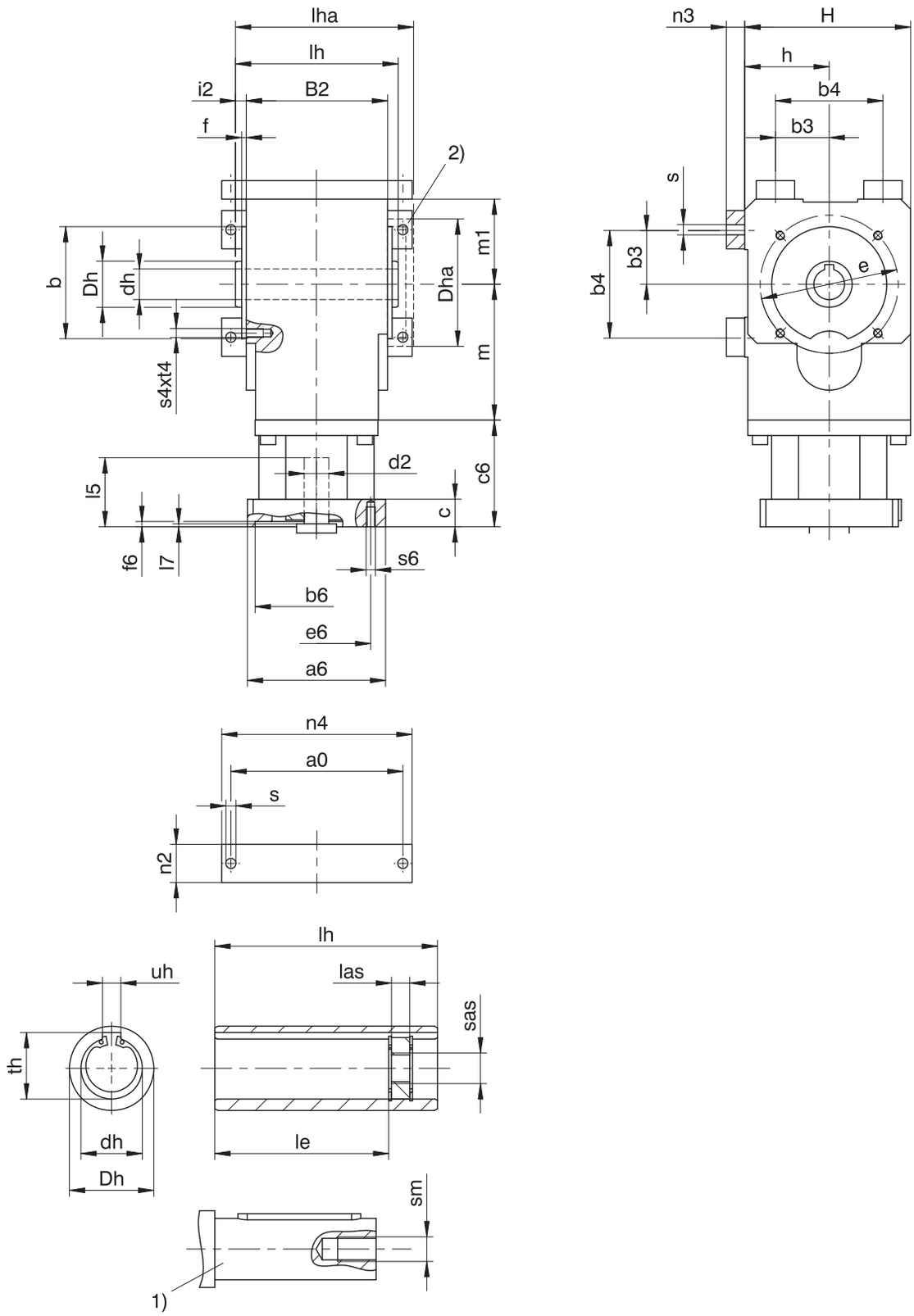

1) The length of the machine shaft must be at least 2.2 x ∅dh and the length of the feather key must be at least 2 x ∅dh.

2) Cover (optional)

Dimensions of gear units

Type	a0	Øb	b3	b4	B2	Ødh	ØDh	ØDha	Øe	f	h	H	i2	le	lh	las	lha	m	m1	n2	n3	n4	Øs	s4	sm	sas	t4	th	uh
KL1	95	60_{j6}	27.5	55	75	16^{H7}	25	70	75	3	46	90	6	60.5	87	12	91	67.5	46	20	12	107	6.6	M6	M5	M6	11	18.3	5^{JS9}
KL2	112	75_{j6}	35.0	70	92	20^{H7}	30	80	90	3	55	108	7	79.5	106	12	110	88.5	55	25	12	124	6.6	M6	M6	M8	13	22.8	6^{JS9}

Example dimensions for the motor connection

Type	Øb6	Øe6	Ød2max	l5	□a6	c	c6	f6	l7	s6
KL1_MQ	40^{H7}	63	16	30	55	15	61.5	3.5	3	M5
KL2_MQ	60^{H7}	75	19	40	75	18	69.5	3.5	3	M5

In the table above, you will find example dimensions for the motor connection for the MQ motor adapter. **Note that when dimension c is lengthened (depending on the motor used), dimensions c6, l5 and lg are also lengthened accordingly.**

You will find additional motor connection dimensions for the MQ motor adapter in our STOBER Configurator at http://configurator.stoeber.de. Here, you can directly download a 3D model of your drive.

15.3.3 A shaft design (hollow shaft), F housing design (flange)

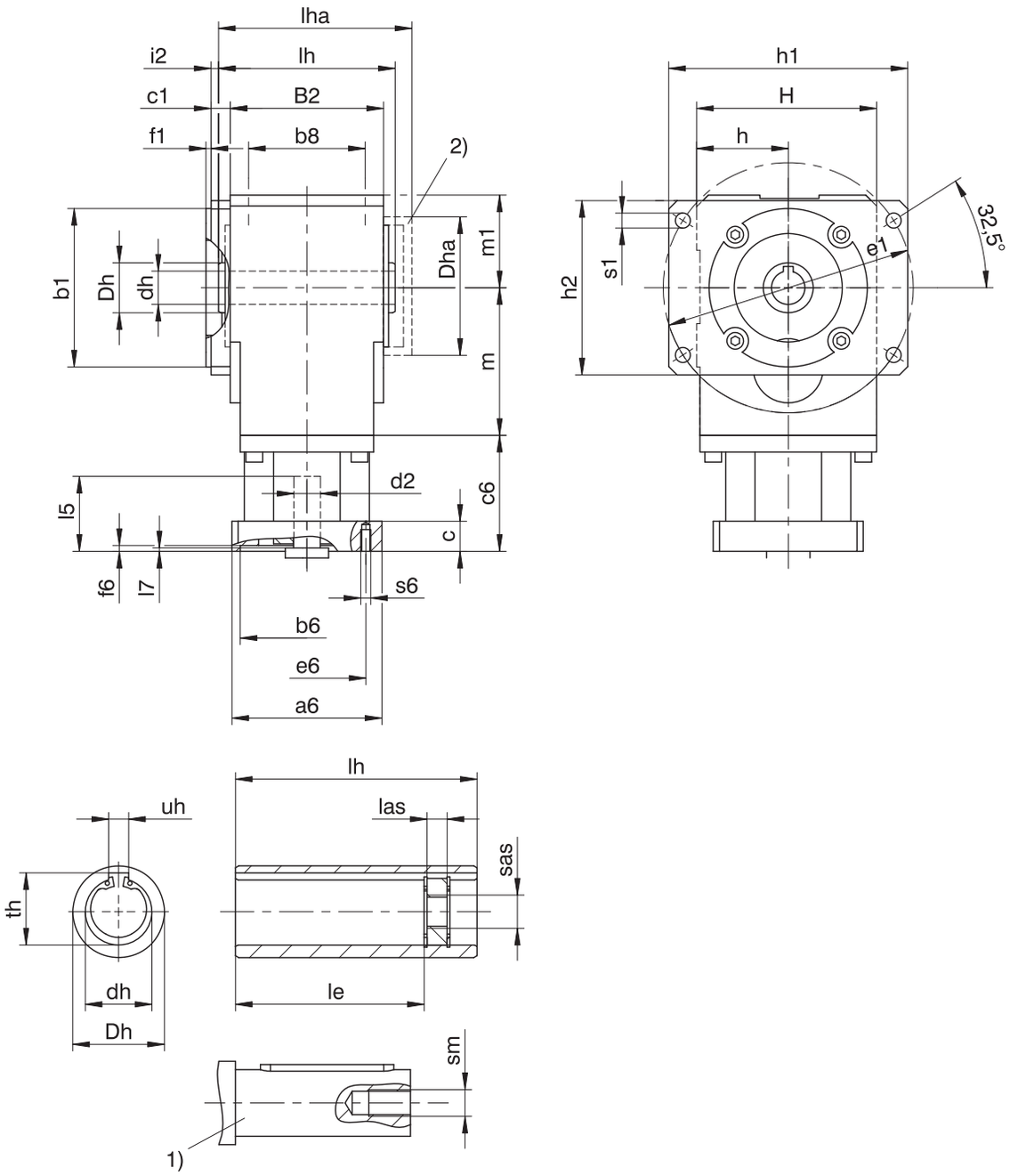

1) The length of the machine shaft must be at least 2.2 x ∅dh and the length of the feather key must be at least 2 x ∅dh.

2) Cover (optional)

Dimensions of gear units

Type	Øb1	b8	B2	c1	Ødh	ØDh	ØDha	Øe1	f1	h	h1	h2	H	i2	le	lh	las	lha	m	m1	Øs1	sm	sas	th	uh
KL1	60_{j6}	50	75	11.5	16^{H7}	25	70	130	3	46	128.5	88.5	90	5.5	60.5	87	12	91	67.5	46	9	M5	M6	18.3	5^{JS9}
KL2	95_{j6}	65	92	11.5	20^{H7}	30	80	150	3	55	143.5	104.5	108	4.5	79.5	106	12	110	88.5	55	9	M6	M8	22.8	6^{JS9}

Example dimensions for the motor connection

Type	Øb6	Øe6	Ød2max	l5	□a6	c	c6	f6	l7	s6
KL1_MQ	40^{H7}	63	16	30	55	15	61.5	3.5	3	M5
KL2_MQ	60^{H7}	75	19	40	75	18	69.5	3.5	3	M5

In the table above, you will find example dimensions for the motor connection for the MQ motor adapter. **Note that when dimension c is lengthened (depending on the motor used), dimensions c6, l5 and lg are also lengthened accordingly.**

You will find additional motor connection dimensions for the MQ motor adapter in our STOBER Configurator at http://configurator.stoeber.de. Here, you can directly download a 3D model of your drive.

15.3.4 G shaft design (solid shaft without feather key), G housing design (pitch circle diameter)

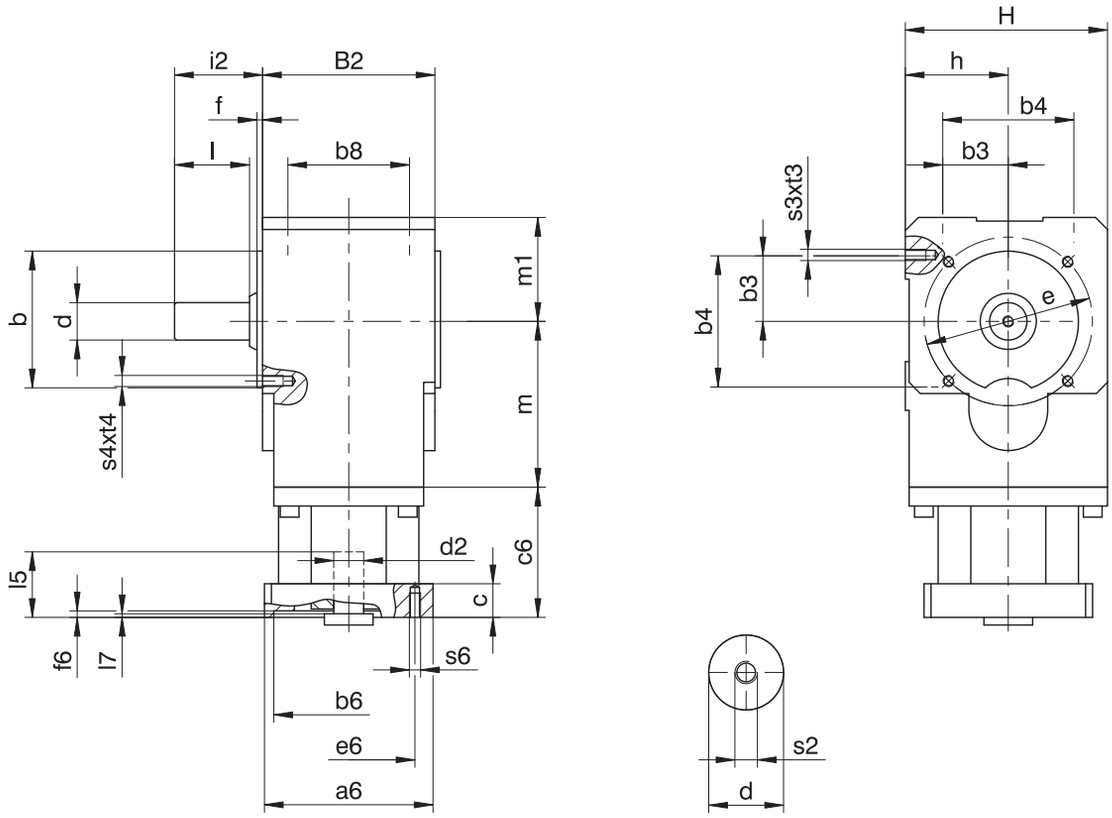

Dimensions of gear units

Type	Øb	b3	b4	b8	B2	Ød	Øe	f	h	H	i2	l	m	m1	s2	s3	s4	t3	t4
KL1	60_{j6}	27.5	55	50	75	16_{k6}	75	3	46	90	38	32	67.5	46	M5	M6	M6	11	11
KL2	75_{j6}	35.0	70	65	92	20_{k6}	90	3	55	108	47	40	88.5	55	M6	M6	M6	13	13

Example dimensions for the motor connection

Type	Øb6	Øe6	Ød2max	l5	□a6	c	c6	f6	l7	s6
KL1_MQ	40^{H7}	63	16	30	55	15	61.5	3.5	3	M5
KL2_MQ	60^{H7}	75	19	40	75	18	69.5	3.5	3	M5

In the table above, you will find example dimensions for the motor connection for the MQ motor adapter. **Note that when dimension c is lengthened (depending on the motor used), dimensions c6, l5 and lg are also lengthened accordingly.**

You will find additional motor connection dimensions for the MQ motor adapter in our STOBER Configurator at http://configurator.stoeber.de. Here, you can directly download a 3D model of your drive.

15.3.5 G shaft design (solid shaft without feather key), NG housing design (foot + pitch circle diameter)

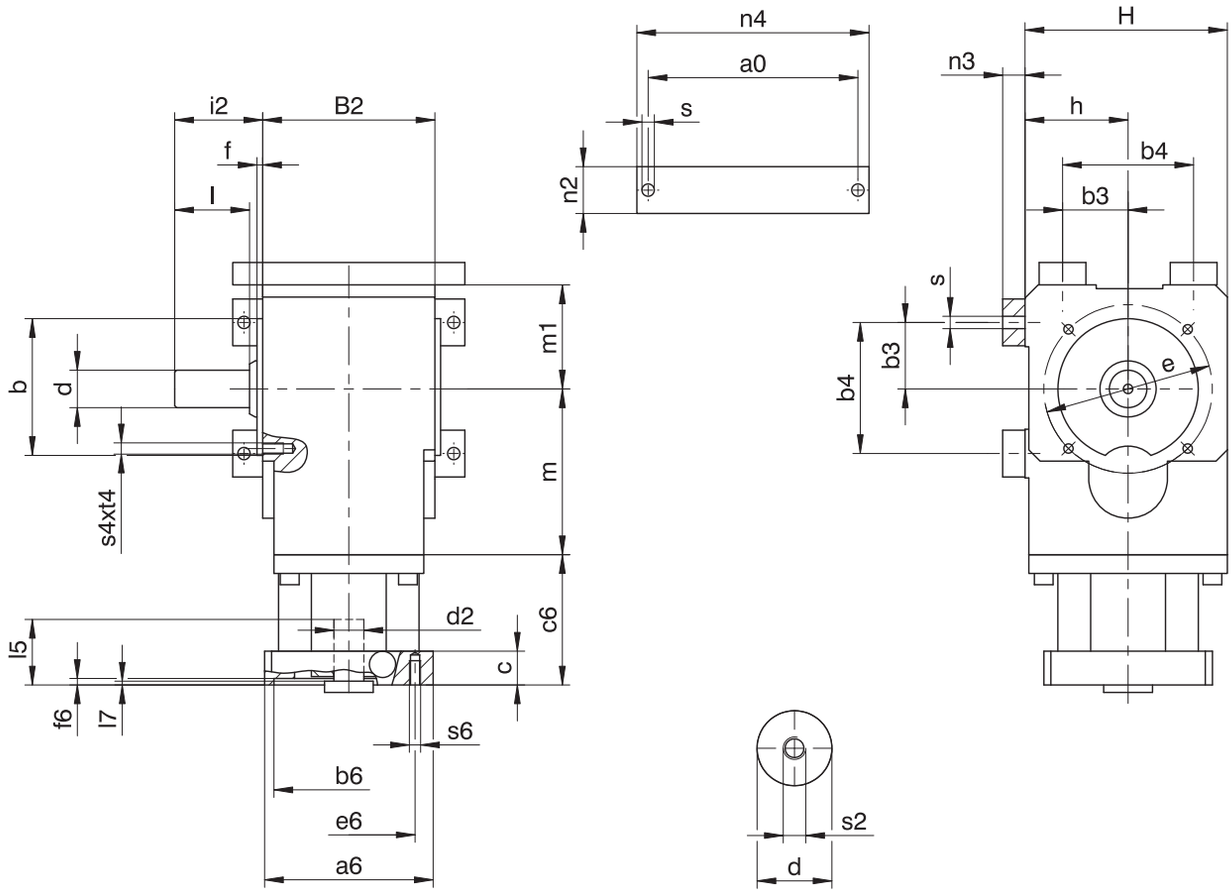

Dimensions of gear units

Type	a0	Øb	b3	b4	B2	Ød	Øe	f	h	H	i2	l	m	m1	n2	n3	n4	Øs	s2	s4	t4
KL1	95	60_{j6}	27.5	55	75	16_{k6}	75	3	46	90	38	32	67.5	46	20	12	107	6.6	M5	M6	11
KL2	112	75_{j6}	35.0	70	92	20_{k6}	90	3	55	108	47	40	88.5	55	25	12	124	6.6	M6	M6	13

Example dimensions for the motor connection

Type	Øb6	Øe6	Ød2max	l5	□a6	c	c6	f6	l7	s6
KL1_MQ	40^{H7}	63	16	30	55	15	61.5	3.5	3	M5
KL2_MQ	60^{H7}	75	19	40	75	18	69.5	3.5	3	M5

In the table above, you will find example dimensions for the motor connection for the MQ motor adapter. **Note that when dimension c is lengthened (depending on the motor used), dimensions c6, l5 and lg are also lengthened accordingly.**

You will find additional motor connection dimensions for the MQ motor adapter in our STOBER Configurator at http://configurator.stoeber.de. Here, you can directly download a 3D model of your drive.

15.3.6 G shaft design (solid shaft without feather key), F housing design (flange)

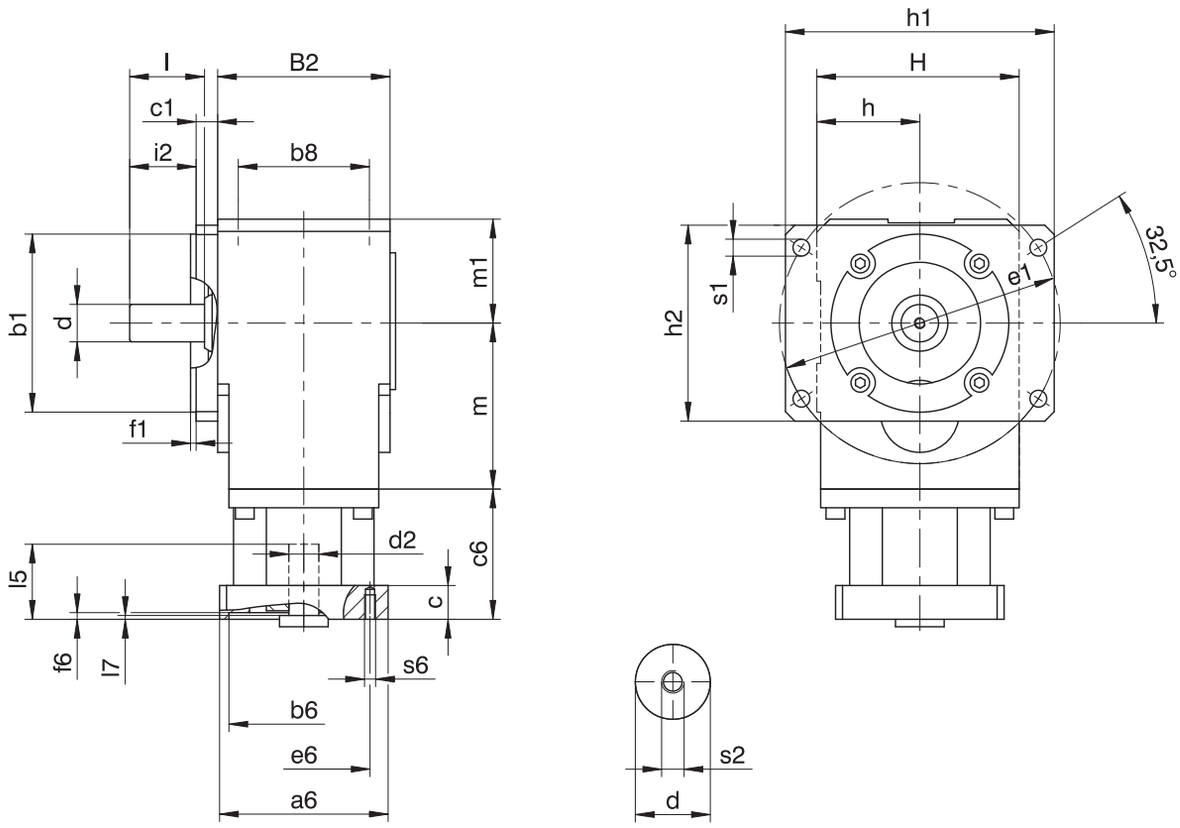

Dimensions of gear units

Type	Øb1	b8	B2	c1	Ød	Øe1	f1	h	h1	h2	H	i2	l	m	m1	Øs1	s2
KL1	60_{j6}	50	75	11.5	16_{k6}	130	3	46	128.5	88.5	90	26.5	32	67.5	46	9	M5
KL2	95_{j6}	65	92	11.5	20_{k6}	150	3	55	143.5	104.5	108	35.5	40	88.5	55	9	M6

Example dimensions for the motor connection

Type	Øb6	Øe6	Ød2max	l5	□a6	c	c6	f6	l7	s6
KL1_MQ	40^{H7}	63	16	30	55	15	61.5	3.5	3	M5
KL2_MQ	60^{H7}	75	19	40	75	18	69.5	3.5	3	M5

In the table above, you will find example dimensions for the motor connection for the MQ motor adapter. **Note that when dimension c is lengthened (depending on the motor used), dimensions c6, l5 and lg are also lengthened accordingly.**

You will find additional motor connection dimensions for the MQ motor adapter in our STOBER Configurator at http://configurator.stoeber.de. Here, you can directly download a 3D model of your drive.

15.3.7 P shaft design (solid shaft with feather key), G housing design (pitch circle diameter)

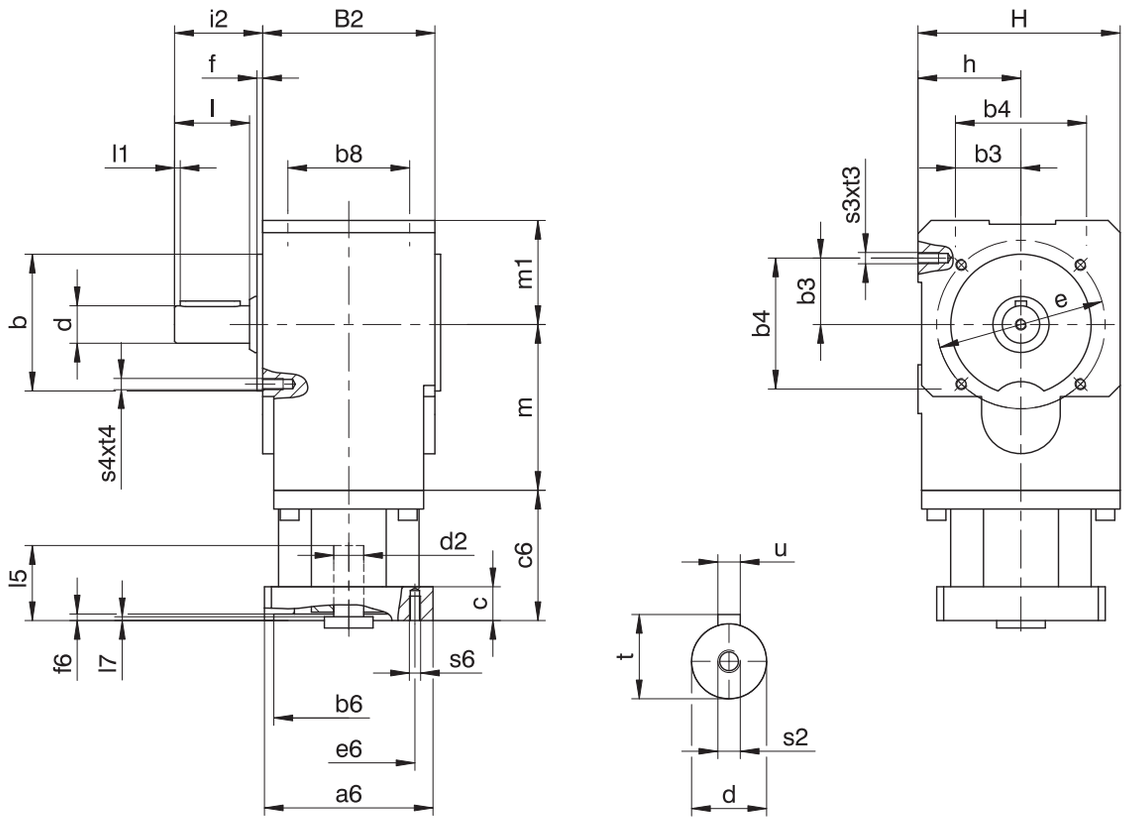

Dimensions of gear units

Type	Øb	b3	b4	b8	B2	Ød	Øe	f	h	H	i2	l	l1	m	m1	s2	s3	s4	t	t3	t4	u
KL1	60_{j6}	27.5	55	50	75	16_{k6}	75	3	46	90	38	32	3	67.5	46	M5	M6	M6	18.0	11	11	A5×5×22
KL2	75_{j6}	35.0	70	65	92	20_{k6}	90	3	55	108	47	40	3	88.5	55	M6	M6	M6	22.5	13	13	A6×6×32

Example dimensions for the motor connection

Type	Øb6	Øe6	Ød2max	l5	□a6	c	c6	f6	l7	s6
KL1_MQ	40^{H7}	63	16	30	55	15	61.5	3.5	3	M5
KL2_MQ	60^{H7}	75	19	40	75	18	69.5	3.5	3	M5

In the table above, you will find example dimensions for the motor connection for the MQ motor adapter. **Note that when dimension c is lengthened (depending on the motor used), dimensions c6, l5 and lg are also lengthened accordingly.**

You will find additional motor connection dimensions for the MQ motor adapter in our STOBER Configurator at http://configurator.stoeber.de. Here, you can directly download a 3D model of your drive.

15.3.8 P shaft design (solid shaft with feather key), NG housing design (foot + pitch circle diameter)

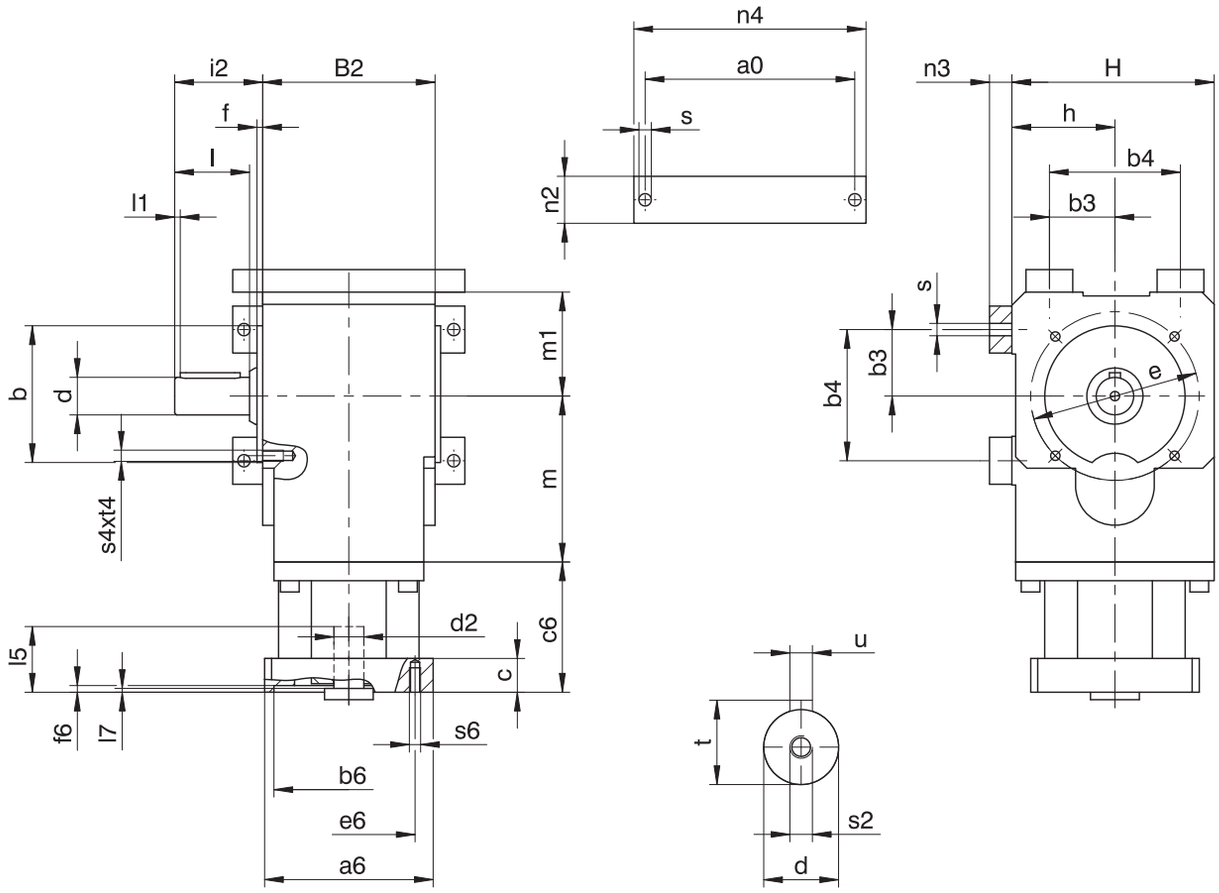

Dimensions of gear units

Type	a0	Øb	b3	b4	B2	Ød	Øe	f	h	H	i2	l	l1	m	m1	n2	n3	n4	Øs	s2	s4	t	t4	u
KL1	95	60_{j6}	27.5	55	75	16_{k6}	75	3	46	90	38	32	3	67.5	46	20	12	107	6.6	M5	M6	18.0	11	A5×5×22
KL2	112	75_{j6}	35.0	70	92	20_{k6}	90	3	55	108	47	40	3	88.5	55	25	12	124	6.6	M6	M6	22.5	13	A6×6×32

Example dimensions for the motor connection

Type	Øb6	Øe6	Ød2max	l5	□a6	c	c6	f6	l7	s6
KL1_MQ	40^{H7}	63	16	30	55	15	61.5	3.5	3	M5
KL2_MQ	60^{H7}	75	19	40	75	18	69.5	3.5	3	M5

In the table above, you will find example dimensions for the motor connection for the MQ motor adapter. **Note that when dimension c is lengthened (depending on the motor used), dimensions c6, l5 and lg are also lengthened accordingly.**

You will find additional motor connection dimensions for the MQ motor adapter in our STOBER Configurator at http://configurator.stoeber.de. Here, you can directly download a 3D model of your drive.

15.3.9 P shaft design (solid shaft with feather key), F housing design (flange)

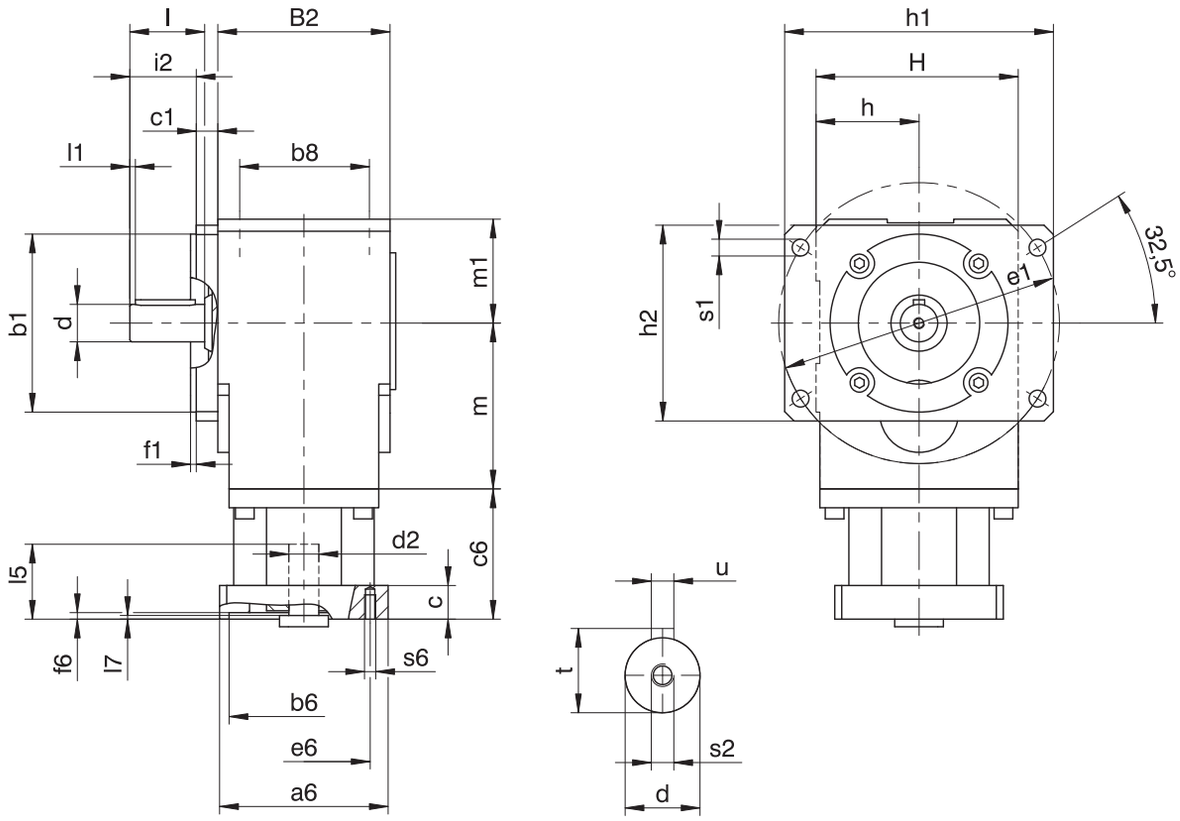

Dimensions of gear units

Type	Øb1	b8	B2	c1	Ød	Øe1	f1	h	h1	h2	H	i2	l	l1	m	m1	Øs1	s2	t	u
KL1	60_{j6}	50	75	11.5	16_{k6}	130	3	46	128.5	88.5	90	26.5	32	3	67.5	46	9	M5	18.0	A5×5×22
KL2	95_{j6}	65	92	11.5	20_{k6}	150	3	55	143.5	104.5	108	35.5	40	3	88.5	55	9	M6	22.5	A6×6×32

Example dimensions for the motor connection

Type	Øb6	Øe6	Ød2max	l5	□a6	c	c6	f6	l7	s6
KL1_MQ	40^{H7}	63	16	30	55	15	61.5	3.5	3	M5
KL2_MQ	60^{H7}	75	19	40	75	18	69.5	3.5	3	M5

In the table above, you will find example dimensions for the motor connection for the MQ motor adapter. **Note that when dimension c is lengthened (depending on the motor used), dimensions c6, l5 and lg are also lengthened accordingly.**

You will find additional motor connection dimensions for the MQ motor adapter in our STOBER Configurator at http://configurator.stoeber.de. Here, you can directly download a 3D model of your drive.

15.3.10 S shaft design (hollow shaft with shrink ring), G housing design (pitch circle diameter)

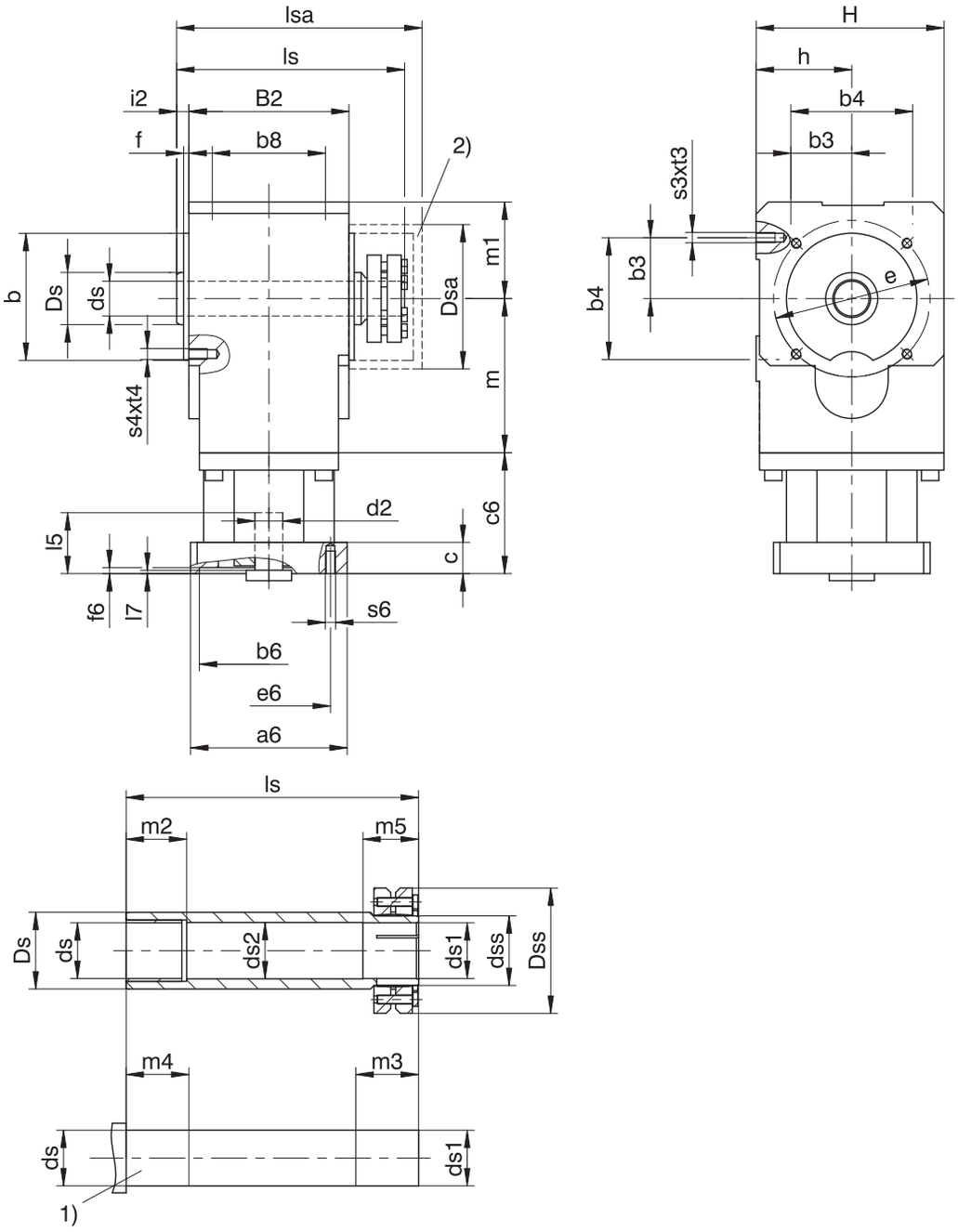

1) Machine shaft: The dimension ls must meet or exceed the specified value.

2) Cover (optional)

Dimensions of gear units

Type	Øb	b3	b4	b8	B2	Øds	Øds1	Øds2	Ødss	ØDs	ØDsa	ØDss	Øe	f	h	H	i2	ls	lsa	m	m1	m2	m3	m4	m5	s3	s4	t3	t4
KL1	60_{j6}	27.5	55	50	75	16^{H7}	16_{h6}^{H7}	17.5	20	25	64	46.2	75	3	46	90	6	109	114.5	67.5	46	17	22	28	23	M6	M6	11	11
KL2	75_{j6}	35.0	70	65	92	20^{H7}	20_{h6}^{H7}	21.5	24	30	79	50.0	90	3	55	108	7	131	139.0	88.5	55	22	27	31	26	M6	M6	13	13

Example dimensions for the motor connection

Type	Øb6	Øe6	Ød2max	l5	□a6	c	c6	f6	l7	s6
KL1_MQ	40^{H7}	63	16	30	55	15	61.5	3.5	3	M5
KL2_MQ	60^{H7}	75	19	40	75	18	69.5	3.5	3	M5

In the table above, you will find example dimensions for the motor connection for the MQ motor adapter. **Note that when dimension c is lengthened (depending on the motor used), dimensions c6, l5 and lg are also lengthened accordingly.**

You will find additional motor connection dimensions for the MQ motor adapter in our STOBER Configurator at http://configurator.stoeber.de. Here, you can directly download a 3D model of your drive.

15.3.11 S shaft design (hollow shaft with shrink ring), NG housing design (foot + pitch circle diameter)

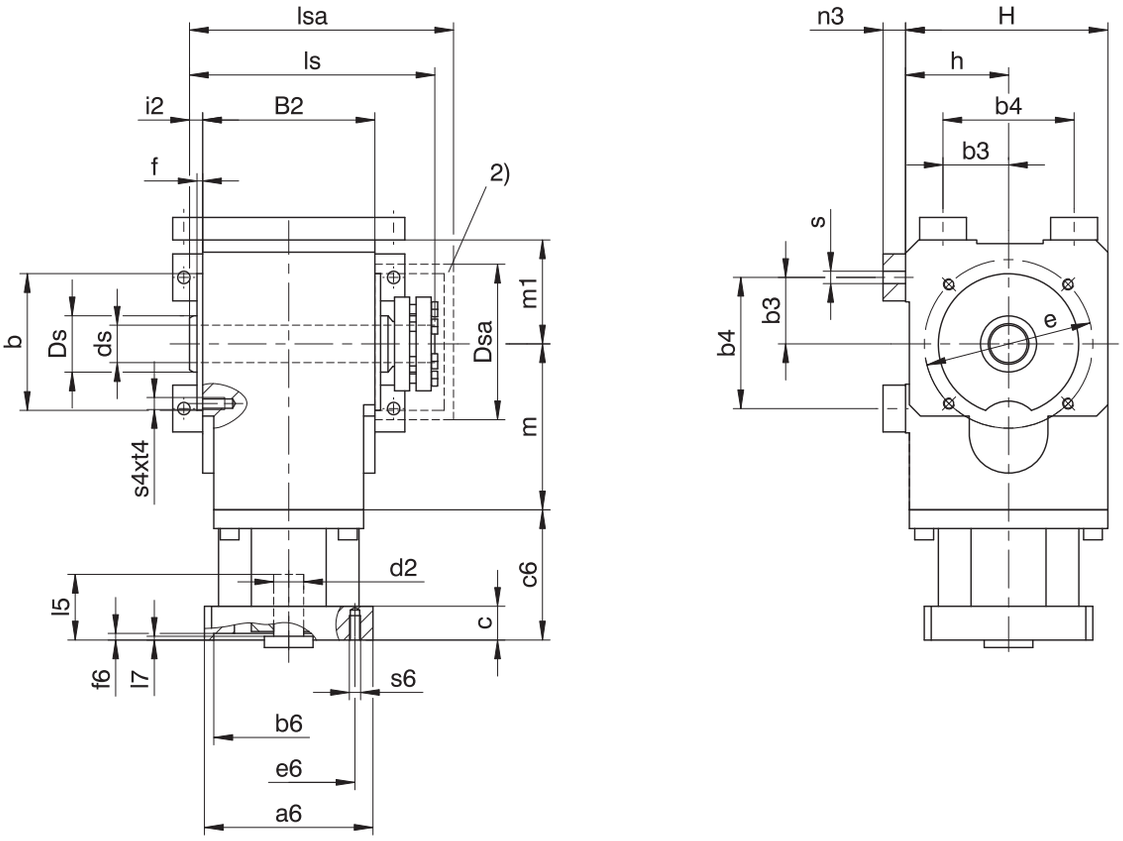

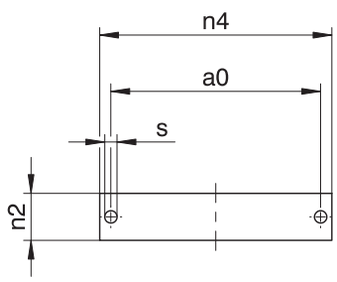

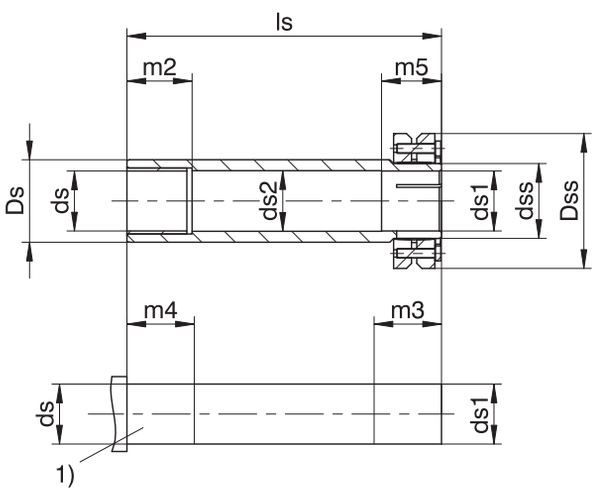

1) Machine shaft: The dimension ls must meet or exceed the specified value.

2) Cover (optional)

Dimensions of gear units

Type	a0	Øb	b3	b4	B2	Øds	Øds1	Øds2	Ødss	ØDs	ØDsa	ØDss	Øe	f	h	H	i2	ls	lsa	m	m1	m2	m3	m4	m5	n2	n3	n4	Øs	s4	t4
KL1	95	60_{j6}	27.5	55	75	16^{H7}	16_{h6}^{H7}	17.5	20	25	64	46.2	75	3	46	90	6	109	114.5	67.5	46	17	22	28	23	20	12	107	6.6	M6	11
KL2	112	75_{j6}	35.0	70	92	20^{H7}	20_{h6}^{H7}	21.5	24	30	79	50.0	90	3	55	108	7	131	139.0	88.5	55	22	27	31	26	25	12	124	6.6	M6	13

Example dimensions for the motor connection

Type	Øb6	Øe6	Ød2max	l5	□a6	c	c6	f6	l7	s6
KL1_MQ	40^{H7}	63	16	30	55	15	61.5	3.5	3	M5
KL2_MQ	60^{H7}	75	19	40	75	18	69.5	3.5	3	M5

In the table above, you will find example dimensions for the motor connection for the MQ motor adapter. **Note that when dimension c is lengthened (depending on the motor used), dimensions c6, l5 and lg are also lengthened accordingly.**

You will find additional motor connection dimensions for the MQ motor adapter in our STOBER Configurator at http://configurator.stoeber.de. Here, you can directly download a 3D model of your drive.

15.3.12 S shaft design (hollow shaft with shrink ring), F housing design (flange)

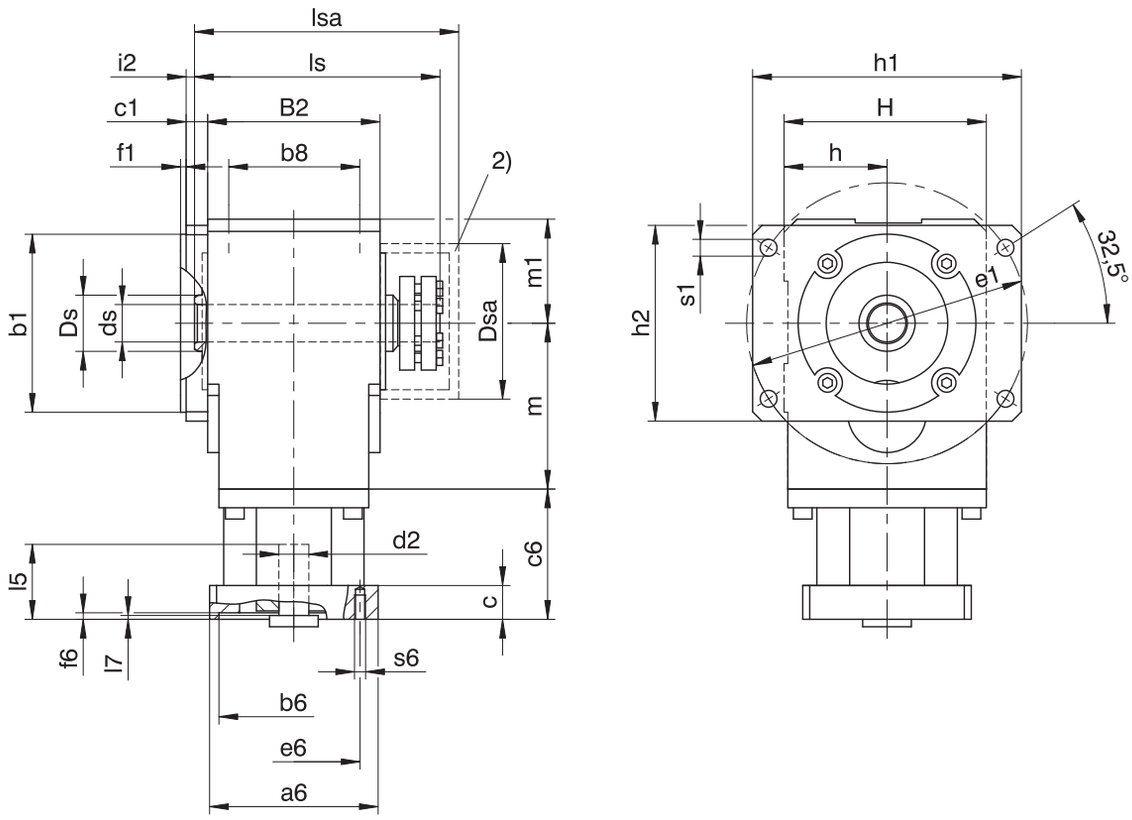

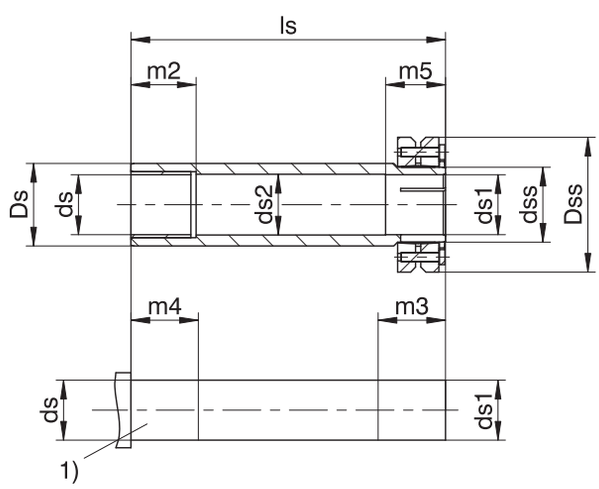

1) Machine shaft: The dimension ls must meet or exceed the specified value.

2) Cover (optional)

Dimensions of gear units

Type	Øb1	b8	B2	c1	Øds	Øds1	Øds2	Ødss	ØDs	ØDsa	ØDss	Øe1	f1	h	h1	h2	H	i2	ls	lsa	m	m1	m2	m3	m4	m5	Øs1
KL1	60_{j6}	50	75	11.5	16^{H7}	$16_{h6}{}^{H7}$	17.5	20	25	64	46.2	130	3	46	128.5	88.5	90	5.5	109	114.5	67.5	46	17	22	28	23	9
KL2	95_{j6}	65	92	11.5	20^{H7}	$20_{h6}{}^{H7}$	21.5	24	30	79	50.0	150	3	55	143.5	104.5	108	4.5	131	139.0	88.5	55	22	27	31	26	9

Example dimensions for the motor connection

Type	Øb6	Øe6	Ød2max	l5	□a6	c	c6	f6	l7	s6
KL1_MQ	40^{H7}	63	16	30	55	15	61.5	3.5	3	M5
KL2_MQ	60^{H7}	75	19	40	75	18	69.5	3.5	3	M5

In the table above, you will find example dimensions for the motor connection for the MQ motor adapter. **Note that when dimension c is lengthened (depending on the motor used), dimensions c6, l5 and lg are also lengthened accordingly.**

You will find additional motor connection dimensions for the MQ motor adapter in our STOBER Configurator at http://configurator.stoeber.de. Here, you can directly download a 3D model of your drive.

15.4 Type designation

This chapter shows you an explanation of the type designation with the associated options.

Additional ordering information not included in the type designation can be found at the end of the chapter.

Example code

KL	2	0	2	P	G	0080	MQ

Explanation

Code	Designation	Design
KL	Type	Helical bevel gear unit
2	Size	2 (example)
0	Generation	Generation 0
2	Stages	Two-stage
A S G **P**	Shaft	Hollow shaft with keyway Hollow shaft with shrink ring Solid shaft without feather key Solid shaft with feather key
G F NG	Housing	Pitch circle diameter Flange Foot + pitch circle diameter
0080	Transmission ratio (i x 10)	i = 8 (example)
MQ	Motor adapter	Square motor adapter with backlash-free plug-in coupling

In order to complete the type designation, also specify:

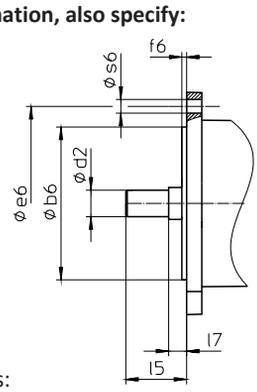

- Motor type or motor dimensions:

  To choose a suitable motor connection, use the STOBER Configurator at http://configurator.stoeber.de and choose your motor or the dimensions of the motor connection.
- The position of locking screw access, see the chapter [▸ 15.5.8]
- Attachment of solid shaft: gear unit side 3 or 4; solid shaft on both sides
- Attachment of hollow shaft with keyway: entry side 3 or 4
- Attachment of hollow shaft with shrink ring: shrink ring on gear unit side 3 or 4
- Attachment of foot plates: gear unit side 1 or 5
- Attachment of flange: gear unit side 3 or 4
- Pitch circle diameter: gear unit side 3 or 4

An explanation of the gear unit sides can be found in the chapter [▸ 15.5.6].

15.4.1 Nameplate

An example gear unit nameplate is explained in the figure below.

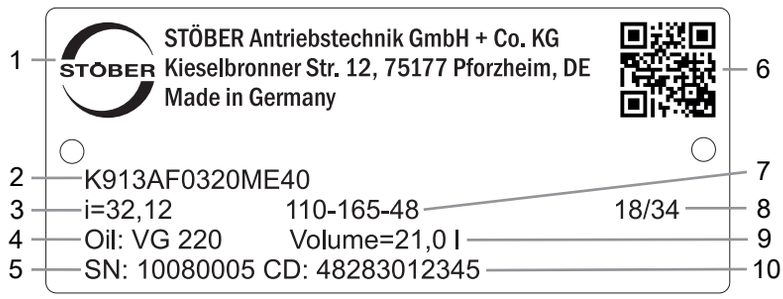

Code	Designation
1	Name of manufacturer
2	Type designation
3	Gear ratio of the gear unit
4	Lubricant specification
5	Serial number of the gear unit
6	QR code (link to product information)
7	Dimensions of the motor adapter (pilot/bolt circle/motor shaft diameter)
8	Date of manufacture (year/calendar week)
9	Lubricant fill volume
10	Customer-specific data

15.4.1.1 Supporting documents

You can view or download supporting documents for the product by reading off the serial number on the nameplate of the product and entering it at the following address online:
https://id.stober.com

Alternatively, you can use a suitable mobile device to scan in the QR code on the nameplate of the product in order to be linked to the supporting documents.

15.5 Product description

15.5.1 Input options

MQ motor adapter for attaching synchronous servo motors

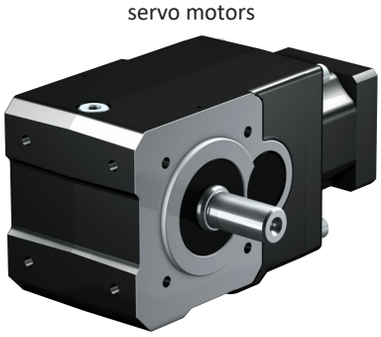

http://www.stoeber.de/en/KLMQ

EZ synchronous servo motor

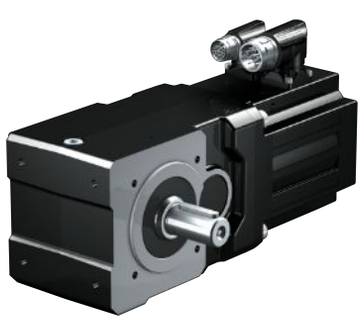

http://www.stoeber.de/en/KLEZ

LM Lean motor

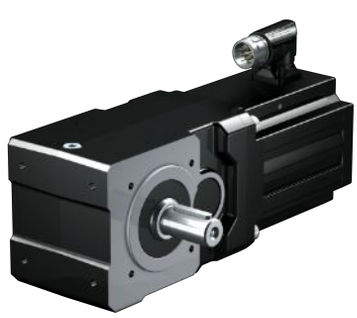

http://www.stoeber.de/en/KLLM

15.5.2 Square motor adapter with backlash-free plug-in coupling (MQ)

In this chapter, you will find a description of the backlash-free plug-in coupling (jaw coupling).

Properties:

- Fast and easy motor attachment
- With integrated thermal length compensation, compensates for linear expansion of the motor shaft
- Balanced for smooth running without vibration, even at high speeds
- Large motor shaft diameter range
- Error-free, thanks to exact centering of the motor

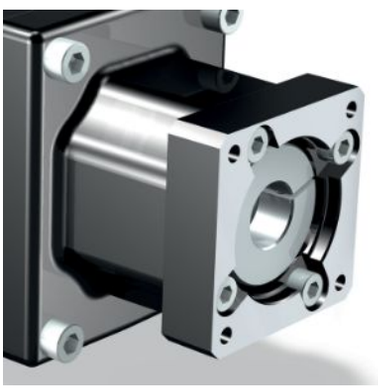

Fig. 1: Backlash-free plug-in coupling

15.5.3 Housing design

Pitch circle diameter G	Flange F	Foot + pitch circle diameter NG
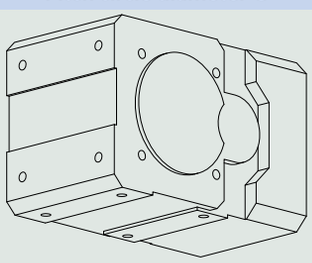	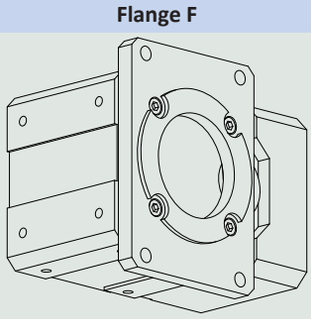	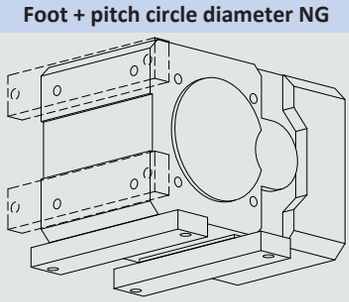

	G	F	NG
KL1	✓	✓	✓
KL2	✓	✓	✓

15.5.4 Combinatorial shaft/housing design

	Housing design			
Shaft design	**Code**	**G**	**F**	**NG**
Hollow shaft with keyway	**A**	AG	AF	ANG
Hollow shaft with shrink ring	**S**	SG	SF	SNG
Solid shaft without feather key	**G**	GG	GF	GNG
Solid shaft with feather key	**P**	PG	PF	PNG

15.5.5 Installation conditions

Hollow shaft

The hollow shaft hole tolerance is ISO H7. The tolerance of the machine shaft must be ISO k6.

Take care to align the machine shaft with the gear unit hollow shaft when attaching the gear unit.

Maximum deviation ≤ 0.03 mm.

For simpler assembly and disassembly of the machine shaft, the hollow shafts are equipped with a spiral groove (as a grease deposit).

A hardened, threaded keeper plate is included in the scope of delivery. You also have the option to order the hollow shaft without a keeper plate.

Hollow shaft with shrink ring

The tolerance of the hollow shaft hole is ISO H7.

The machine shaft must be ISO h9.

Select a material for the machine shaft with a permitted surface pressure of $p \geq 325\ N/mm^2$.

Possible materials:

- C45E +QT
- 42CrMo4

Fastening the gear units on the machine side using the pitch circle diameter

The specified torques and forces only apply when gear units are fastened on the machine side using screws of strength class 10.9. In addition, the gear housings must be adjusted at the pilot. The machine-side fit must be H7.

15.5.6 Gear unit sides

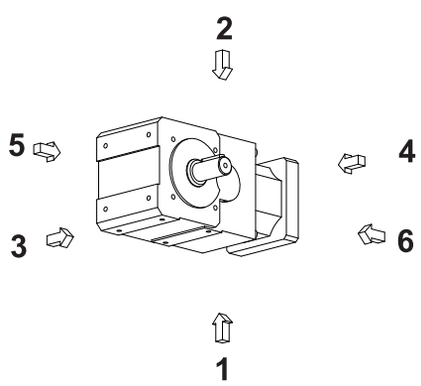

The numbers identify the gear unit sides.

15.5.7 Lubricants

STOBER fills the gear units with the amount and type of lubricant specified on the nameplate.

You will receive lubricants for use in the food industry upon request.

15.5.8 Position of locking screw access

Mounting position EL1	Mounting position EL4
Locking screw in 270° position (standard)	Locking screw in 270° position (standard)
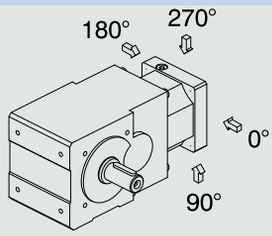	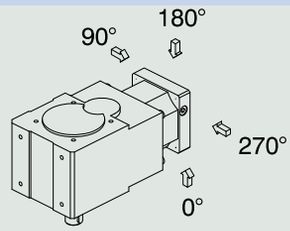

Indicate variations for your gear unit in the order.

Note that the access hole for the locking screw also rotates when the gear unit is rotated to another mounting position.

15.5.9 Other product features

Feature	Value
Max. permitted gear unit temperature (on the surface of the gear unit)	≤ 80 °C
Paint	Black RAL 9005
Explosion-proof design in accordance with (ATEX) Directive 2014/34/EU (optional)	Available, see Document ID 441677_en
Efficiency: η_{get} two-stage	 97%
Protection class: [1]	IP65

[1] Observe the protection class of all the components.

15.5.10 Direction of rotation

Solid shaft (P and G), solid shaft on both sides (P and G), hollow shaft with keyway (A)

Output side 4	Output side 3
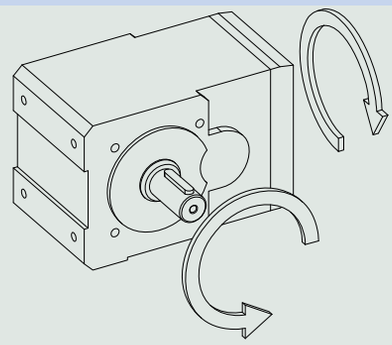	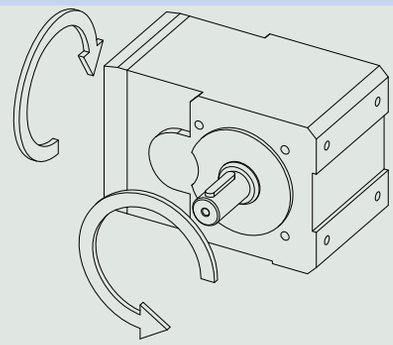

The specified directions of rotation also apply to gear units with hollow shaft (A) if the entry side of the machine shaft corresponds to the side of the solid shaft that is shown.

The direction of rotation for the shaft design of a solid shaft on both sides corresponds to the direction of rotation for output side 4.

The pictures show mounting position EL1.

Hollow shaft with shrink ring (S)

Shrink ring side 4	Shrink ring side 3
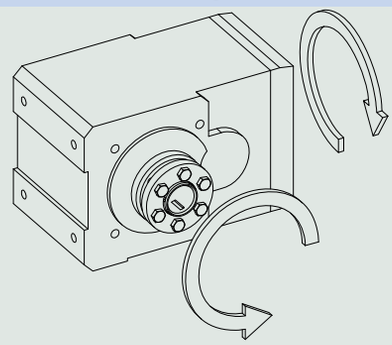	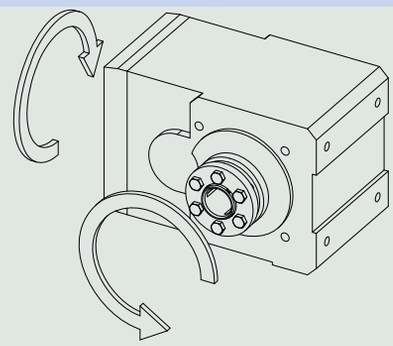

The pictures show mounting position EL1.

15.6 Project configuration

Project your drives using our SERVOsoft designing software. Download SERVOsoft for free at https://www.stoeber.de/en/ServoSoft.

Observe the limit conditions in this chapter to ensure a safe design for your drives.

An explanation of the formula symbols can be found in the chapter [▸ 18.1].

15.6.1 Drive selection

The formula symbols for values actually present in the application are marked with *.

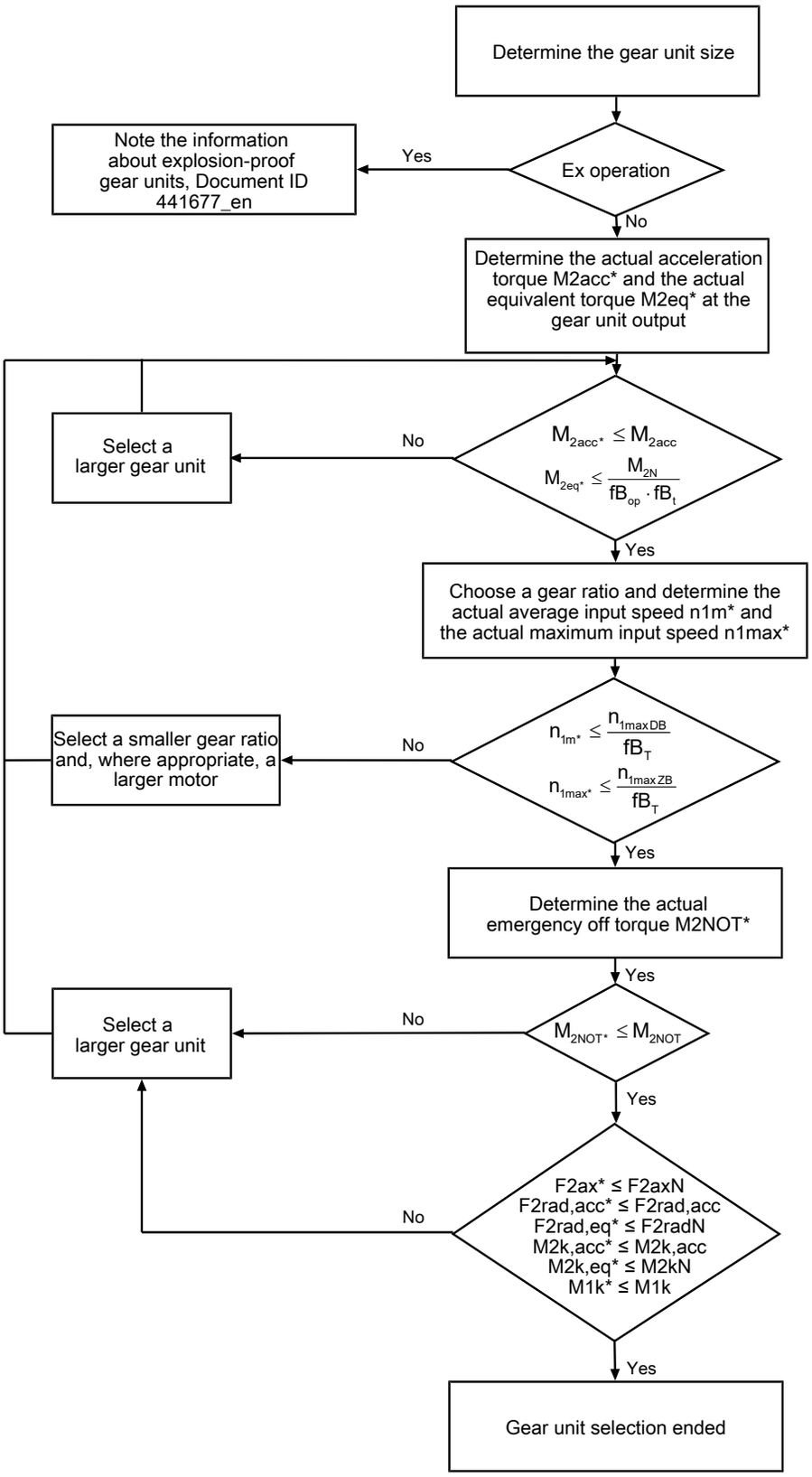

Calculate the forces and tilting torques in the chapter Permitted shaft loads.

The values for i, n_{1maxDB}, n_{1maxZB}, M_{2acc}, M_{2NOT} and M_{2N} can be found in the selection tables.

The values for fB_T, fB_{op} and fB_t can be found in the corresponding tables in this chapter.

Example of cyclic operation

The following calculations are based on a representation of the power taken from the output based in accordance with the following example:

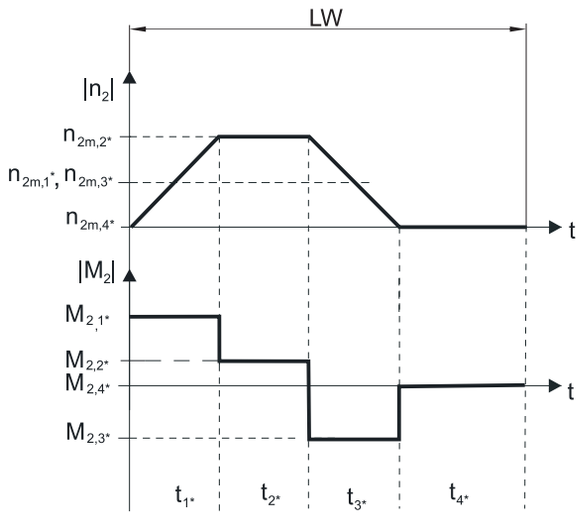

Calculation of the actual maximum acceleration torque

$$M_{2acc*} = J_{tot} \cdot \frac{\Delta n_2}{9.55 \cdot \Delta t} + M_{L*}$$

Calculation of the actual average input speed

$$n_{1m*} = n_{2m*} \cdot i$$

$$n_{2m*} = \frac{|n_{2m,1*}| \cdot t_{1*} + \ldots + |n_{2m,n*}| \cdot t_{n*}}{t_{1*} + \ldots + t_{n*}}$$

If $t_{1*} + \ldots + t_{3*} \geq 6$ min, calculate n_{2m*} without the rest phase t_{4*}.

The values for the ratio i can be found in the selection tables.

Calculation of the actual emergency-off torque

$$M_{2NOT*} = J_{tot} \cdot \frac{\Delta n_2}{9.55 \cdot \Delta t} + M_{L*}$$

Calculation of the actual equivalent torque

$$M_{2eq*} = \sqrt[3]{\frac{|n_{2m,1*}| \cdot t_{1*} \cdot |M_{2,1*}{}^3| + \ldots + |n_{2m,n*}| \cdot t_{n*} \cdot |M_{2,n*}{}^3|}{|n_{2m,1*}| \cdot t_{1*} + \ldots + |n_{2m,n*}| \cdot t_{n*}}}$$

Operating factors

Operating mode	fB_{op}
Uniform continuous operation	1.00
Cyclic operation	1.25
Reversing load cyclic operation	1.40

Run time	fB_t
Daily runtime ≤ 8 h	1.00
Daily runtime ≤ 16 h	1.15
Daily runtime ≤ 24 h	1.20

Temperature		fB_T
Motor cooling	**Surrounding temperature**	
Motor with forced ventilation	≤ 20 °C	0.9
	≤ 30 °C	1.0
	≤ 40 °C	1.15
Motor with convection cooling	≤ 20 °C	1.0
	≤ 30 °C	1.1
	≤ 40 °C	1.25

Notes

- The maximum permitted gear unit temperature of ≤ 80 °C must not be exceeded. Doing so may result in damage to the gear unit.

15.6.2 Permitted shaft loads for the output shaft

The values specified in the tables apply to the permitted shaft loads:

- For shaft dimensions in accordance with the catalog
- For output speeds n_{2m*} ≤ 100 rpm ($F^{2axN} = F_{2ax100}$; $F_{2radN} = F_{2rad100}$; $M_{2kN} = M_{2k100}$)
- Only if radial forces on the gear unit are stabilized by its pilots for the pitch circle diameter and flange housing design

15.6.2.1 G and P shaft designs

Permitted shaft loads for G and P shaft designs (solid shaft)

Type	z_2 [mm]	F_{2ax100} [N]	$F_{2rad100}$ [N]	$F_{2rad,acc}$ [N]	M_{2k100} [Nm]	$M_{2k,acc}$ [Nm]
KL1	20.0	380	1900	1900	68	68
KL2	22.0	560	2800	2800	118	118

For other output speeds, download diagrams at http://configurator.stoeber.de.

The following applies to output speeds n_{2m*} > 100 rpm:

$$F_{2axN} = \frac{F_{2ax100}}{\sqrt[3]{\frac{n_{2m*}}{100\ \text{rpm}}}} \qquad F_{2radN} = \frac{F_{2rad100}}{\sqrt[3]{\frac{n_{2m*}}{100\ \text{rpm}}}} \qquad M_{2kN} = \frac{M_{2k100}}{\sqrt[3]{\frac{n_{2m*}}{100\ \text{rpm}}}}$$

The values for F_{2ax100}, $F_{2rad100}$ and M_{2k100} can be found in the table "Permitted shaft loads" in this chapter.

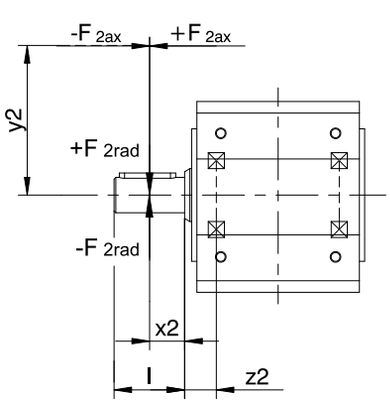

Fig. 2: Force application points for solid shaft

The specified values for $F_{2rad100}$ refer to force application on the center of the output shaft: $x_2 = l/2$.

Shaft dimensions can be found in the "Dimensional drawings" chapter.

The following applies to other force application points:

$$M_{2k*} = \frac{2 \cdot F_{2ax*} \cdot y_2 + F_{2rad*} \cdot (x_2 + z_2)}{1000} \leq M_{2kN}$$

$$F_{2rad*} \leq F_{2radN}$$

$$F_{2ax*} \leq F_{2axN}$$

For applications with multiple axial and/or radial forces, you must add the forces as vectors.

In the event of EMERGENCY OFF operation (max. 1000 load changes), you can multiply the permitted forces and torques for F_{2ax20}, F_{2rad20} and M_{2k20} by a factor of two.

15.6.2.2 A and S shaft design

Permitted shaft loads for A shaft design (hollow shaft with keyway)

Type	z_2 [mm]	F_{2ax100} [N]	$F_{2rad100}$ [N]	$F_{2rad,acc}$ [N]	M_{2k100} [Nm]	$M_{2k,acc}$ [Nm]
KL1	18.5	250	1250	1250	43	43
KL2	22.0	560	2800	2800	118	118

Permitted shaft loads for S shaft design (hollow shaft with shrink ring)

Type	z_2 [mm]	F_{2ax100} [N]	$F_{2rad100}$ [N]	$F_{2rad,acc}$ [N]	M_{2k100} [Nm]	$M_{2k,acc}$ [Nm]
KL1	18.5	250	1250	1250	43	43
KL2	22.0	560	2800	2800	118	118

For other output speeds, download diagrams at http://configurator.stoeber.de.

The following applies to output speeds n_{2m*} > 100 rpm:

$$F_{2axN} = \frac{F_{2ax100}}{\sqrt[3]{\frac{n_{2m*}}{100\ \text{rpm}}}} \qquad F_{2radN} = \frac{F_{2rad100}}{\sqrt[3]{\frac{n_{2m*}}{100\ \text{rpm}}}} \qquad M_{2kN} = \frac{M_{2k100}}{\sqrt[3]{\frac{n_{2m*}}{100\ \text{rpm}}}}$$

The values for F_{2ax100}, $F_{2rad100}$ and M_{2k100} can be found in the table "Permitted shaft loads" in this chapter.

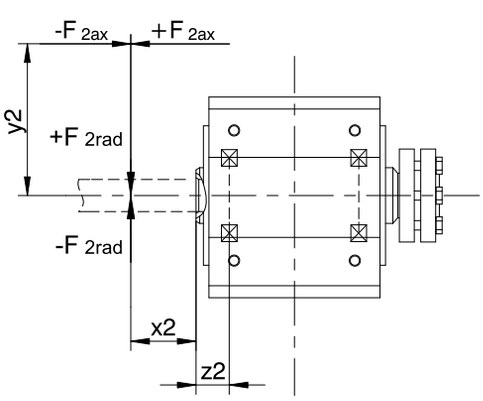

Fig. 3: Force application points for hollow shaft

You can determine the permitted radial forces from the permitted breakdown torque M_{2kN}. The actual radial forces may not exceed the permitted radial forces. The permitted radial forces pertain to the shaft end (x2 = 0).

$$M_{2k*} = \frac{2 \cdot F_{2ax*} \cdot y_2 + F_{2rad*} \cdot (x_2 + z_2)}{1000} \leq M_{2kN}$$

$$F_{2ax*} \leq F_{2axN}$$

For applications with multiple axial and/or radial forces, you must add the forces as vectors.

In the event of EMERGENCY OFF operation (max. 1000 load changes), you can multiply the permitted forces and torques for F_{2ax20}, F_{2rad20} and M_{2k20} by a factor of two.

15.6.3 Permitted breakdown torques at the gear unit input

For a horizontal mounting position of the motor, verify that the permitted breakdown torque at the gear unit input is not exceeded before installation on a STOBER gear unit. You can find information for how to do that in this chapter.

Calculate the actual breakdown torque as follows:

$M_{1k*} = F_{1k*} \bullet l_{sp} \leq M_{1k}$

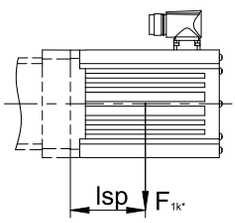

Type	M_{1k} [Nm]
KL1_MQ	15
KL2_MQ	20

15.6.4 Radial shaft seal rings

Leak-proofness

Our gear units are equipped with high-quality radial shaft seal rings and checked for leaks. However, a leak cannot be fully ruled out over the length of use of a gear unit. If you use a gear unit with goods incompatible with the lubricant, you must take measures to prevent direct contact with the gear unit lubricant in case of a leak.

15.7 Additional documentation

Additional documentation related to the product can be found at
http://www.stoeber.de/en/downloads/

Enter the ID of the documentation in the Search... field.

Documentation	ID
Operating manual for KL/KS/PHK/PHKX/PHQK/PK/PKX right-angle servo gear units and right-angle servo geared motors	443150_en
Operating manual for explosion-proof KL/KS/PHK/PHKX/PHQK/PK/PKX right-angle gear units	443005_en
Information explosion-proof gear units	441677_en

16 K helical bevel gear units

Table of contents

16.1 Overview ... 350

16.2 Selection tables ... 351

16.3 Dimensional drawings ... 363

16.3.1 A shaft design (hollow shaft), G housing design (pitch circle diameter) ... 364

16.3.2 A shaft design (hollow shaft), NG housing design (foot + pitch circle diameter) ... 366

16.3.3 A shaft design (hollow shaft), GD housing design (pitch circle diameter + torque arm bracket) ... 368

16.3.4 A shaft design (hollow shaft), NGD housing design (foot + pitch circle diameter + torque arm bracket) ... 370

16.3.5 A shaft design (hollow shaft), F housing design (round flange) ... 372

16.3.6 A shaft design (hollow shaft), NF housing design (foot + round flange) ... 374

16.3.7 S shaft design (hollow shaft with shrink ring), G housing design (pitch circle diameter) ... 376

16.3.8 S shaft design (hollow shaft with shrink ring), NG housing design (foot + pitch circle diameter) ... 378

16.3.9 S shaft design (hollow shaft with shrink ring), GD housing design (pitch circle diameter + torque arm bracket) ... 380

16.3.10 S shaft design (hollow shaft with shrink ring), NGD housing design (foot + pitch circle diameter + torque arm bracket) ... 382

16.3.11 S shaft design (hollow shaft with shrink ring), F housing design (round flange) ... 384

16.3.12 S shaft design (hollow shaft with shrink ring), NF housing design (foot + round flange) ... 386

16.3.13 V shaft design (solid shaft), G housing design (pitch circle diameter) ... 388

16.3.14 V shaft design (solid shaft), NG housing design (foot + pitch circle diameter) ... 390

16.3.15 V shaft design (solid shaft), F housing design (round flange) ... 392

16.3.16 V shaft design (solid shaft), NF housing design (foot + round flange) ... 394

16.3.17 Oil expansion tank ... 396

16.4 Type designation ... 397

16.4.1 Nameplate ... 398

16.5 Product description ... 399

16.5.1 Input options ... 399

16.5.2 Motor adapter with EasyAdapt coupling (ME) ... 399

16.5.3 Square motor adapter with backlash-free plug-in coupling (MQ) ... 400

16.5.4 Housing design ... 401

16.5.5 Combinatorial shaft/housing design ... 402

16.5.6 Installation conditions ... 402

16.5.7 Mounting positions ... 403

16.5.8 Lubricants ... 404

16.5.9 Position of locking screw access ... 404

16.5.10 Other product features ... 404

16.5.11 Maintenance ... 404

16.5.12 Direction of rotation ... 405

16.6 Project configuration ... 406

16.6.1 Drive selection ... 407

16.6.2 Permitted shaft loads for the output shaft ... 409

16.6.3 Permitted breakdown torques at the gear unit input ... 411

16.6.4 Radial shaft seal rings ... 412

16.6.5 Oil expansion tank ... 412

16.7 Additional documentation ... 412

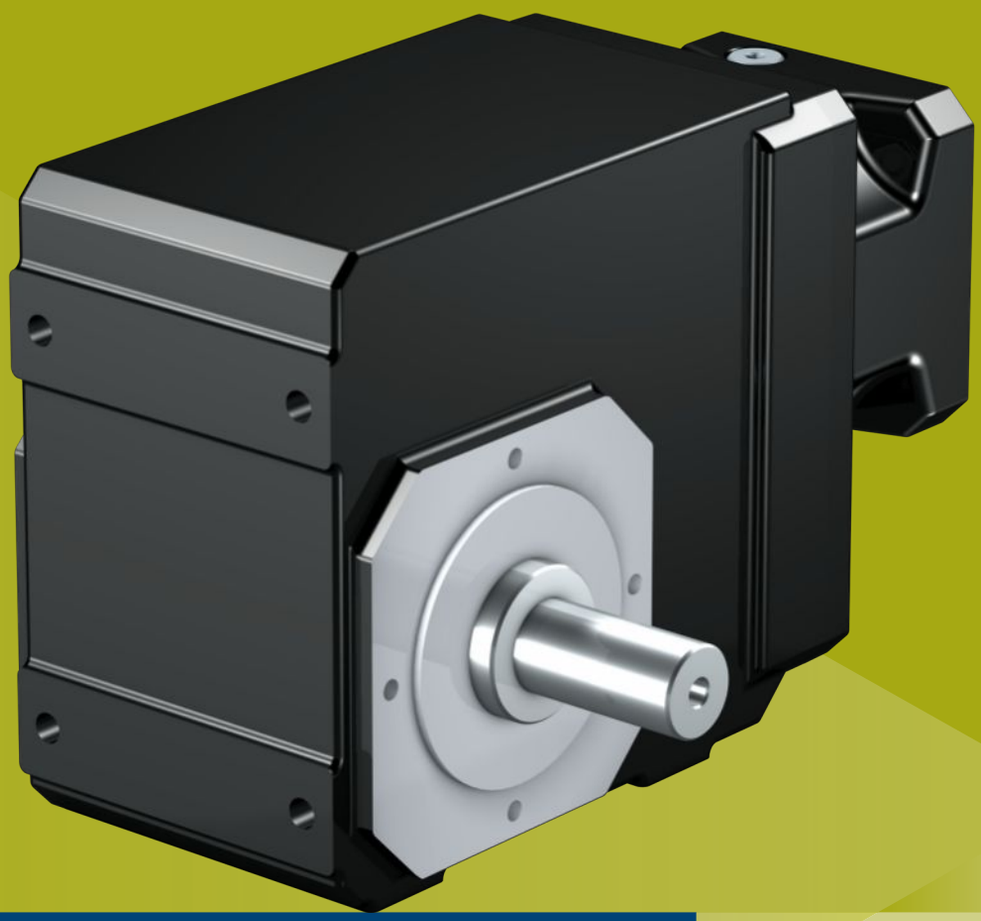

16 Helical bevel gear units K

16.1 Overview

Highly rigid, helical-geared right-angle gear units

Features

Power density	★★☆☆☆
Backlash	★★★☆☆
Price category	€€
Shaft load	★★★☆☆
Smooth operation	★★★☆☆
Torsional stiffness	★★☆☆☆
Mass moment of inertia	★★★★☆
Helical gearing	✓
Maintenance-free (K1 – K4)	✓
FKM seal ring at the input	✓
Reinforced output bearing (K5 – K8)	✓ (on request)
Easy and reliable attachment to any synchronous servo motor	✓

Key ★☆☆☆☆ good | ★★★★★ excellent
€ Economy | €€€€€ Premium

Technical data

i	4 – 381
M_{2acc}	50 – 13200 Nm
$\Delta\phi_2$	1.5 – 12 arcmin
η_{get}	94 – 97 %

16.2 Selection tables

The technical data specified in the selection tables applies to:

- Installation altitudes up to 1000 m above sea level
- Surrounding temperatures from 0 °C to 40 °C
- Without consideration for thermal limiting performance

You can find the mass moment of inertia J_1 for smaller motor shaft diameters and all other technical data at http://configurator.stoeber.de.

An explanation of the formula symbols can be found in the chapter [▸ 18.1].

i	i_{exakt}	Type	n_{1MAXDB} EL1,2 [rpm]	n_{1MAXDB} EL3,4,5,6 [rpm]	n_{1MAXZB} [rpm]	J_1 [kgcm²]	m [kg]	d_{MW} [mm]	$\Delta\varphi_2$ [arcmin]	$\Delta\varphi_{2redII}$ [arcmin]	$\Delta\varphi_{2redI}$ [arcmin]	C_2 [Nm/arcmin]	M_{2N} [Nm]	M_{2acc} [Nm]	M_{2NOT} [Nm]
K102 ($M_{2acc,max}$ = 135 Nm)															
4.000	4/1	K102_0040 ME10	3300	2800	5000	1.5	11	≤19	12.0	6.0	–	6.3	65	93	116
4.000	4/1	K102_0040 ME20	3300	2800	5000	3.4	12	≤24	12.0	6.0	–	6.6	65	93	116
5.568	1520/273	K102_0056 ME10	3300	2800	5000	1.3	11	≤19	12.0	6.0	–	6.6	73	109	162
5.568	1520/273	K102_0056 ME20	3300	2800	5000	3.2	12	≤24	12.0	6.0	–	6.7	73	109	162
6.000	6/1	K102_0060 ME10	3300	2800	5000	1.1	11	≤19	12.0	6.0	–	6.6	75	112	175
6.000	6/1	K102_0060 ME20	3300	2800	5000	3.0	12	≤24	12.0	6.0	–	6.7	75	112	175
6.644	299/45	K102_0066 ME10	3600	3300	5500	1.0	11	≤19	12.0	6.0	–	6.6	77	116	193
6.644	299/45	K102_0066 ME20	3600	3300	5500	2.9	12	≤24	12.0	6.0	–	6.7	77	116	193
8.309	1911/230	K102_0083 ME10	3600	3300	5500	0.92	11	≤19	12.0	6.0	–	6.7	83	125	220
8.309	1911/230	K102_0083 ME20	3600	3300	5500	2.8	12	≤24	12.0	6.0	–	6.7	83	125	220
9.249	1748/189	K102_0092 ME10	3600	3300	5500	0.96	11	≤19	12.0	6.0	–	6.7	86	129	240
9.249	1748/189	K102_0092 ME20	3600	3300	5500	2.9	12	≤24	12.0	6.0	–	6.7	86	129	240
10.14	507/50	K102_0100 ME10	4000	3800	6000	0.84	11	≤19	12.0	6.0	–	6.7	89	125	220
10.14	507/50	K102_0100 ME20	3700	3700	6000	2.7	12	≤24	12.0	6.0	–	6.8	89	125	220
11.57	266/23	K102_0115 ME10	3600	3300	5500	0.87	11	≤19	12.0	6.0	–	6.7	93	135	240
11.57	266/23	K102_0115 ME20	3600	3300	5500	2.8	12	≤24	12.0	6.0	–	6.8	93	135	240
12.62	429/34	K102_0125 ME10	4000	3800	6000	0.78	11	≤19	12.0	6.0	–	6.7	96	125	220
12.62	429/34	K102_0125 ME20	3700	3700	6000	2.7	12	≤24	12.0	6.0	–	6.8	96	125	220
14.11	494/35	K102_0140 ME10	4000	3800	6000	0.81	11	≤19	12.0	6.0	–	6.8	99	135	240
14.11	494/35	K102_0140 ME20	3700	3700	6000	2.7	12	≤24	12.0	6.0	–	6.8	99	135	240
16.71	117/7	K102_0165 ME10	4000	4000	7000	0.73	11	≤19	12.0	6.0	–	6.8	105	125	220
16.71	117/7	K102_0165 ME20	3700	3700	6000	2.6	12	≤24	12.0	6.0	–	6.8	105	125	220
17.56	2090/119	K102_0175 ME10	4000	3800	6000	0.76	11	≤19	12.0	6.0	–	6.8	107	135	240
17.56	2090/119	K102_0175 ME20	3700	3700	6000	2.7	12	≤24	12.0	6.0	–	6.8	107	135	240
20.15	403/20	K102_0200 ME10	4000	4000	7000	0.70	11	≤19	12.0	6.0	–	6.8	110	125	220
20.15	403/20	K102_0200 ME20	3700	3700	6000	2.6	12	≤24	12.0	6.0	–	6.8	110	125	220
23.27	1140/49	K102_0230 ME10	4000	4000	7000	0.72	11	≤19	12.0	6.0	–	6.8	117	135	240
23.27	1140/49	K102_0230 ME20	3700	3700	6000	2.6	12	≤24	12.0	6.0	–	6.8	117	135	240
25.22	1261/50	K102_0250 ME10	4000	4000	7000	0.68	11	≤19	12.0	6.0	–	6.8	96	115	192
25.22	1261/50	K102_0250 ME20	3700	3700	6000	2.6	12	≤24	12.0	6.0	–	6.8	96	115	192
28.05	589/21	K102_0280 ME10	4000	4000	7000	0.70	11	≤19	12.0	6.0	–	6.8	120	135	240
28.05	589/21	K102_0280 ME20	3700	3700	6000	2.6	12	≤24	12.0	6.0	–	6.8	120	135	240
33.71	4719/140	K102_0340 ME10	4000	4000	7000	0.63	11	≤19	12.0	6.0	–	6.8	73	88	146
35.11	3686/105	K102_0350 ME10	4000	4000	7000	0.68	11	≤19	12.0	6.0	–	6.8	120	135	240
35.11	3686/105	K102_0350 ME20	3700	3700	6000	2.6	12	≤24	12.0	6.0	–	6.8	120	135	240
40.30	403/10	K102_0400 ME10	4000	4000	7000	0.62	11	≤19	12.0	6.0	–	6.8	61	74	123
46.92	2299/49	K102_0470 ME10	4000	4000	7000	0.63	11	≤19	12.0	6.0	–	6.8	102	122	203
50.31	5031/100	K102_0500 ME10	4000	4000	7000	0.62	11	≤19	12.0	6.0	–	6.8	50	60	100
56.10	1178/21	K102_0560 ME10	4000	4000	7000	0.62	11	≤19	12.0	6.0	–	6.8	86	103	171
70.03	2451/35	K102_0700 ME10	4000	4000	7000	0.62	11	≤19	12.0	6.0	–	6.8	70	83	139
K202 ($M_{2acc,max}$ = 220 Nm)															
4.000	4/1	K202_0040 ME20	3000	2600	4500	6.4	20	≤32	10.0	5.0	1.5	10	116	174	291
4.000	4/1	K202_0040 ME30	3000	2600	4500	12	22	≤38	10.0	5.0	1.5	10	116	174	291
4.364	48/11	K202_0044 ME10	3000	2600	4500	2.7	19	≤19	10.0	5.0	1.5	9.7	102	102	127
4.364	48/11	K202_0044 ME20	3000	2600	4500	6.1	20	≤32	10.0	5.0	1.5	10	120	180	317
4.364	48/11	K202_0044 ME30	3000	2600	4500	11	22	≤38	10.0	5.0	1.5	11	120	180	317
5.177	2107/407	K202_0052 ME20	3000	2600	4500	5.7	20	≤32	10.0	5.0	1.5	10	127	190	377
5.177	2107/407	K202_0052 ME30	3000	2600	4500	11	22	≤38	10.0	5.0	1.5	11	127	190	377
6.000	6/1	K202_0060 ME10	3000	2600	4500	2.3	19	≤19	10.0	5.0	1.5	10	133	140	175
6.000	6/1	K202_0060 ME20	3000	2600	4500	5.7	20	≤32	10.0	5.0	1.5	11	133	200	400
6.000	6/1	K202_0060 ME30	3000	2600	4500	11	22	≤38	10.0	5.0	1.5	11	133	200	400
6.683	2279/341	K202_0067 ME10	3500	3100	5000	1.7	19	≤19	10.0	5.0	1.5	10	135	156	195

i	i_{exakt}	Type	n_{1MAXDB} EL1,2 [rpm]	n_{1MAXDB} EL3,4,5,6 [rpm]	n_{1MAXZB} [rpm]	J_1 [kgcm²]	m [kg]	d_{MW} [mm]	$\Delta\varphi_2$ [arcmin]	$\Delta\varphi_{2redII}$ [arcmin]	$\Delta\varphi_{2redI}$ [arcmin]	C_2 [Nm/arcmin]	M_{2N} [Nm]	M_{2acc} [Nm]	M_{2NOT} [Nm]
K202 ($M_{2acc,max}$ = 220 Nm)															
6.683	2279/341	K202_0067 ME20	3500	3100	5000	5.1	20	≤32	10.0	5.0	1.5	11	138	207	400
6.683	2279/341	K202_0067 ME30	3500	3100	5000	10	22	≤38	10.0	5.0	1.5	11	138	207	400
7.118	2107/296	K202_0071 ME20	3000	2600	4500	5.4	20	≤32	10.0	5.0	1.5	11	141	211	400
7.118	2107/296	K202_0071 ME30	3000	2600	4500	11	22	≤38	10.0	5.0	1.5	11	141	211	400
8.397	2494/297	K202_0084 ME10	3500	3100	5000	1.4	19	≤19	10.0	5.0	1.5	10	149	196	244
8.397	2494/297	K202_0084 ME20	3500	3100	5000	4.8	20	≤32	10.0	5.0	1.5	11	149	220	400
8.397	2494/297	K202_0084 ME30	3500	3100	5000	10	22	≤38	10.0	5.0	1.5	11	149	220	400
9.190	2279/248	K202_0092 ME10	3500	3100	5000	1.6	19	≤19	10.0	5.0	1.5	10	153	214	268
9.190	2279/248	K202_0092 ME20	3500	3100	5000	5.0	20	≤32	10.0	5.0	1.5	11	153	220	400
9.190	2279/248	K202_0092 ME30	3500	3100	5000	10	22	≤38	10.0	5.0	1.5	11	153	220	400
10.07	2881/286	K202_0100 ME10	3900	3500	5500	1.2	19	≤19	10.0	5.0	1.5	10	155	220	293
10.07	2881/286	K202_0100 ME20	3700	3500	5500	4.6	20	≤32	10.0	5.0	1.5	11	158	220	400
10.07	2881/286	K202_0100 ME30	3500	3500	5000	9.9	22	≤38	10.0	5.0	1.5	11	158	220	400
11.55	1247/108	K202_0115 ME10	3500	3100	5000	1.3	19	≤19	10.0	5.0	1.5	11	166	220	336
11.55	1247/108	K202_0115 ME20	3500	3100	5000	4.7	20	≤32	10.0	5.0	1.5	11	166	220	400
11.55	1247/108	K202_0115 ME30	3500	3100	5000	10	22	≤38	10.0	5.0	1.5	11	166	220	400
12.71	559/44	K202_0125 ME10	3900	3500	5500	1.0	19	≤19	10.0	5.0	1.5	11	168	220	370
12.71	559/44	K202_0125 ME20	3700	3500	5500	4.4	20	≤32	10.0	5.0	1.5	11	171	220	400
12.71	559/44	K202_0125 ME30	3500	3500	5000	9.8	22	≤38	10.0	5.0	1.5	11	171	220	400
13.85	2881/208	K202_0140 ME10	3900	3500	5500	1.1	19	≤19	10.0	5.0	1.5	11	176	220	400
13.85	2881/208	K202_0140 ME20	3700	3500	5500	4.5	20	≤32	10.0	5.0	1.5	11	176	220	400
13.85	2881/208	K202_0140 ME30	3500	3500	5000	9.9	22	≤38	10.0	5.0	1.5	11	176	220	400
16.86	2967/176	K202_0170 ME10	4000	3900	6500	0.89	19	≤19	10.0	5.0	1.5	11	179	220	400
16.86	2967/176	K202_0170 ME20	3700	3700	6000	4.3	20	≤32	10.0	5.0	1.5	11	188	220	400
16.86	2967/176	K202_0170 ME30	3500	3500	5000	9.6	22	≤38	10.0	5.0	1.5	11	188	220	400
17.47	559/32	K202_0175 ME10	3900	3500	5500	0.99	19	≤19	10.0	5.0	1.5	11	190	220	400
17.47	559/32	K202_0175 ME20	3700	3500	5500	4.4	20	≤32	10.0	5.0	1.5	11	190	220	400
17.47	559/32	K202_0175 ME30	3500	3500	5000	9.7	22	≤38	10.0	5.0	1.5	11	190	220	400
20.33	1118/55	K202_0200 ME10	4000	3900	6500	0.82	19	≤19	10.0	5.0	1.5	11	182	220	400
20.33	1118/55	K202_0200 ME20	3700	3700	6000	2.7	20	≤24	10.0	5.0	1.5	11	200	220	400
23.18	2967/128	K202_0230 ME10	4000	3900	6500	0.87	19	≤19	10.0	5.0	1.5	11	200	220	400
23.18	2967/128	K202_0230 ME20	3700	3700	6000	4.3	20	≤32	10.0	5.0	1.5	11	200	220	400
23.18	2967/128	K202_0230 ME30	3500	3500	5000	9.6	22	≤38	10.0	5.0	1.5	11	200	220	400
25.13	1935/77	K202_0250 ME10	4000	3900	6500	0.77	19	≤19	10.0	5.0	1.5	11	187	220	400
25.13	1935/77	K202_0250 ME20	3700	3700	6000	2.7	20	≤24	10.0	5.0	1.5	11	200	220	400
27.95	559/20	K202_0280 ME10	4000	3900	6500	0.80	19	≤19	10.0	5.0	1.5	11	200	220	400
27.95	559/20	K202_0280 ME20	3700	3700	6000	2.7	20	≤24	10.0	5.0	1.5	11	200	220	400
33.62	1849/55	K202_0340 ME10	4000	3900	6500	0.71	19	≤19	10.0	5.0	1.5	11	154	185	308
33.62	1849/55	K202_0340 ME20	3700	3700	6000	2.6	20	≤24	10.0	5.0	1.5	11	154	185	308
34.55	1935/56	K202_0350 ME10	4000	3900	6500	0.75	19	≤19	10.0	5.0	1.5	11	200	220	400
34.55	1935/56	K202_0350 ME20	3700	3700	6000	2.7	20	≤24	10.0	5.0	1.5	11	200	220	400
40.39	1333/33	K202_0400 ME10	4000	3900	6500	0.66	19	≤19	10.0	5.0	1.5	11	116	139	198
46.23	1849/40	K202_0460 ME10	4000	3900	6500	0.71	19	≤19	10.0	5.0	1.5	11	200	220	400
46.23	1849/40	K202_0460 ME20	3700	3700	6000	2.6	20	≤24	10.0	5.0	1.5	11	200	220	400
50.49	6665/132	K202_0500 ME10	4000	3900	6500	0.64	19	≤19	10.0	5.0	1.5	11	96	116	185
55.54	1333/24	K202_0560 ME10	4000	3900	6500	0.66	19	≤19	10.0	5.0	1.5	11	159	191	272
69.43	6665/96	K202_0690 ME10	4000	3900	6500	0.64	19	≤19	10.0	5.0	1.5	11	132	159	255
K203 ($M_{2acc,max}$ = 220 Nm)															
39.45	135407/3432	K203_0390 ME10	4000	3900	6500	0.68	22	≤19	10.0	6.0	2.5	11	200	202	253
45.22	58609/1296	K203_0450 ME10	4000	3900	6500	0.69	22	≤19	10.0	6.0	2.5	11	200	220	290
49.76	26273/528	K203_0500 ME10	4000	3900	6500	0.67	22	≤19	10.0	6.0	2.5	11	200	220	319
54.25	135407/2496	K203_0540 ME10	4000	3900	6500	0.68	22	≤19	10.0	6.0	2.5	11	200	220	348
66.03	46483/704	K203_0660 ME10	4000	3900	6500	0.66	22	≤19	10.0	6.0	2.5	11	200	220	400
68.42	26273/384	K203_0680 ME10	4000	3900	6500	0.67	22	≤19	10.0	6.0	2.5	11	200	220	400
79.62	26273/330	K203_0800 ME10	4000	3900	6500	0.66	22	≤19	10.0	6.0	2.5	11	200	220	400
90.79	46483/512	K203_0910 ME10	4000	3900	6500	0.66	22	≤19	10.0	6.0	2.5	11	200	220	400
109.5	26273/240	K203_1090 ME10	4000	3900	6500	0.66	22	≤19	10.0	6.0	2.5	11	200	220	400
135.3	30315/224	K203_1350 ME10	4000	3900	6500	0.66	22	≤19	10.0	6.0	2.5	11	200	220	400
181.0	86903/480	K203_1810 ME10	4000	3900	6500	0.65	22	≤19	10.0	6.0	2.5	11	200	220	400
217.5	62651/288	K203_2180 ME10	4000	3900	6500	0.65	22	≤19	10.0	6.0	2.5	11	159	191	272
271.9	313255/1152	K203_2720 ME10	4000	3900	6500	0.65	22	≤19	10.0	6.0	2.5	11	132	159	255
K302 ($M_{2acc,max}$ = 385 Nm)															
4.000	4/1	K302_0040 ME20	2700	2300	4000	9.0	25	≤32	10.0	4.0	1.5	16	204	233	291
4.000	4/1	K302_0040 ME30	2700	2300	4000	14	27	≤38	10.0	4.0	1.5	16	204	306	700

i	i_{exakt}	Type	n_{1MAXDB} EL1,2 [rpm]	n_{1MAXDB} EL3,4,5,6 [rpm]	n_{1MAXZB} [rpm]	J_1 [kgcm²]	m [kg]	d_{MW} [mm]	$\Delta\varphi_2$ [arcmin]	$\Delta\varphi_{2redII}$ [arcmin]	$\Delta\varphi_{2redI}$ [arcmin]	C_2 [Nm/arcmin]	M_{2N} [Nm]	M_{2acc} [Nm]	M_{2NOT} [Nm]
K302 ($M_{2acc,max}$ = 385 Nm)															
4.364	48/11	K302_0044 ME20	2700	2300	4000	8.4	25	≤32	10.0	4.0	1.5	16	210	254	317
4.364	48/11	K302_0044 ME30	2700	2300	4000	14	27	≤38	10.0	4.0	1.5	16	210	315	700
5.375	43/8	K302_0054 ME20	2700	2300	4000	7.2	25	≤32	10.0	4.0	1.5	16	225	313	391
5.375	43/8	K302_0054 ME30	2700	2300	4000	13	27	≤38	10.0	4.0	1.5	16	225	313	391
6.000	6/1	K302_0060 ME20	2700	2300	4000	7.5	25	≤32	10.0	4.0	1.5	16	233	349	436
6.000	6/1	K302_0060 ME30	2700	2300	4000	13	27	≤38	10.0	4.0	1.5	16	233	350	700
6.740	2150/319	K302_0067 ME20	3200	2800	4500	6.3	25	≤32	10.0	4.0	1.5	16	242	364	490
6.740	2150/319	K302_0067 ME30	3200	2800	4500	12	27	≤38	10.0	4.0	1.5	16	242	364	490
7.391	473/64	K302_0074 ME20	2700	2300	4000	6.7	25	≤32	10.0	4.0	1.5	16	250	375	538
7.391	473/64	K302_0074 ME30	2700	2300	4000	12	27	≤38	10.0	4.0	1.5	16	250	375	538
8.444	2322/275	K302_0084 ME10	3200	2800	4500	2.2	24	≤19	10.0	4.0	1.5	16	169	197	246
8.444	2322/275	K302_0084 ME20	3200	2800	4500	5.6	25	≤32	10.0	4.0	1.5	16	261	385	614
8.444	2322/275	K302_0084 ME30	3200	2800	4500	11	27	≤38	10.0	4.0	1.5	16	261	385	614
9.267	1075/116	K302_0093 ME20	3200	2800	4500	5.9	25	≤32	10.0	4.0	1.5	16	270	385	674
9.267	1075/116	K302_0093 ME30	3200	2800	4500	11	27	≤38	10.0	4.0	1.5	16	270	385	674
10.14	3010/297	K302_0100 ME10	3500	3100	5000	1.8	24	≤19	10.0	4.0	1.5	16	176	236	295
10.14	3010/297	K302_0100 ME20	3500	3100	5000	5.2	25	≤32	10.0	4.0	1.5	16	278	385	700
10.14	3010/297	K302_0100 ME30	3500	3100	5000	11	27	≤38	10.0	4.0	1.5	16	278	385	700
11.61	1161/100	K302_0115 ME10	3200	2800	4500	2.0	24	≤19	10.0	4.0	1.5	16	232	270	338
11.61	1161/100	K302_0115 ME20	3200	2800	4500	5.4	25	≤32	10.0	4.0	1.5	16	291	385	700
11.61	1161/100	K302_0115 ME30	3200	2800	4500	11	27	≤38	10.0	4.0	1.5	16	291	385	700
12.58	3182/253	K302_0125 ME10	3500	3100	5000	1.5	24	≤19	10.0	4.0	1.5	16	187	293	366
12.58	3182/253	K302_0125 ME20	3500	3100	5000	4.9	25	≤32	10.0	4.0	1.5	16	298	385	700
12.58	3182/253	K302_0125 ME30	3500	3100	5000	10	27	≤38	10.0	4.0	1.5	16	298	385	700
13.94	1505/108	K302_0140 ME10	3500	3100	5000	1.7	24	≤19	10.0	4.0	1.5	16	242	325	406
13.94	1505/108	K302_0140 ME20	3500	3100	5000	5.1	25	≤32	10.0	4.0	1.5	16	309	385	700
13.94	1505/108	K302_0140 ME30	3500	3100	5000	10	27	≤38	10.0	4.0	1.5	16	309	385	700
16.94	559/33	K302_0170 ME10	3800	3500	6000	1.2	24	≤19	10.0	4.0	1.5	16	198	375	469
16.94	559/33	K302_0170 ME20	3700	3500	6000	4.6	25	≤32	10.0	4.0	1.5	16	330	385	700
16.94	559/33	K302_0170 ME30	3500	3500	5000	9.9	27	≤38	10.0	4.0	1.5	16	330	385	700
17.29	1591/92	K302_0175 ME10	3500	3100	5000	1.4	24	≤19	10.0	4.0	1.5	16	257	385	503
17.29	1591/92	K302_0175 ME20	3500	3100	5000	4.8	25	≤32	10.0	4.0	1.5	16	332	385	700
17.29	1591/92	K302_0175 ME30	3500	3100	5000	10	27	≤38	10.0	4.0	1.5	16	332	385	700
20.28	3569/176	K302_0200 ME10	3800	3500	6000	1.0	24	≤19	10.0	4.0	1.5	16	208	385	513
20.28	3569/176	K302_0200 ME20	3700	3500	6000	4.4	25	≤32	10.0	4.0	1.5	16	350	385	700
20.28	3569/176	K302_0200 ME30	3500	3500	5000	9.8	27	≤38	10.0	4.0	1.5	16	350	385	700
23.29	559/24	K302_0230 ME10	3800	3500	6000	1.1	24	≤19	10.0	4.0	1.5	16	272	385	645
23.29	559/24	K302_0230 ME20	3700	3500	6000	4.5	25	≤32	10.0	4.0	1.5	16	350	385	700
23.29	559/24	K302_0230 ME30	3500	3500	5000	9.8	27	≤38	10.0	4.0	1.5	16	350	385	700
25.26	3612/143	K302_0250 ME10	3800	3500	6000	0.91	24	≤19	10.0	4.0	1.5	16	211	385	603
25.26	3612/143	K302_0250 ME20	3700	3500	6000	2.8	25	≤24	10.0	4.0	1.5	16	347	385	603
27.88	3569/128	K302_0280 ME10	3800	3500	6000	0.99	24	≤19	10.0	4.0	1.5	16	287	385	700
27.88	3569/128	K302_0280 ME20	3700	3500	6000	4.4	25	≤32	10.0	4.0	1.5	16	350	385	700
27.88	3569/128	K302_0280 ME30	3500	3500	5000	9.7	27	≤38	10.0	4.0	1.5	16	350	385	700
33.62	1849/55	K302_0340 ME10	3800	3500	6000	0.80	24	≤19	10.0	4.0	1.5	16	219	300	501
33.62	1849/55	K302_0340 ME20	3700	3500	6000	2.7	25	≤24	10.0	4.0	1.5	16	250	300	501
34.73	903/26	K302_0350 ME10	3800	3500	6000	0.89	24	≤19	10.0	4.0	1.5	16	291	385	700
34.73	903/26	K302_0350 ME20	3700	3500	6000	2.8	25	≤24	10.0	4.0	1.5	16	350	385	700
40.51	4902/121	K302_0410 ME10	3800	3500	6000	0.76	24	≤19	10.0	4.0	1.5	16	193	231	385
40.51	4902/121	K302_0410 ME20	3700	3500	6000	2.7	25	≤24	10.0	4.0	1.5	16	193	231	385
46.23	1849/40	K302_0460 ME10	3800	3500	6000	0.79	24	≤19	10.0	4.0	1.5	16	301	385	688
46.23	1849/40	K302_0460 ME20	3700	3500	6000	2.7	25	≤24	10.0	4.0	1.5	16	344	385	688
50.49	6665/132	K302_0500 ME10	3800	3500	6000	0.69	24	≤19	10.0	4.0	1.5	16	154	173	216
55.71	2451/44	K302_0560 ME10	3800	3500	6000	0.75	24	≤19	10.0	4.0	1.5	16	265	318	529
55.71	2451/44	K302_0560 ME20	3700	3500	6000	2.6	25	≤24	10.0	4.0	1.5	16	265	318	529
69.43	6665/96	K302_0690 ME10	3800	3500	6000	0.68	24	≤19	10.0	4.0	1.5	16	212	237	297
K303 ($M_{2acc,max}$ = 385 Nm)															
32.65	44892/1375	K303_0330 ME20	3700	3500	6000	2.8	30	≤24	10.0	5.0	2.5	16	350	385	577
35.83	215/6	K303_0360 ME20	3700	3500	6000	2.8	30	≤24	10.0	5.0	2.5	16	350	385	633
39.19	34916/891	K303_0390 ME20	3700	3500	6000	2.7	30	≤24	10.0	5.0	2.5	16	350	385	692
44.89	11223/250	K303_0450 ME20	3700	3500	6000	2.8	30	≤24	10.0	5.0	2.5	16	350	385	700
48.63	184556/3795	K303_0490 ME20	3700	3500	6000	2.7	30	≤24	10.0	5.0	2.5	16	350	385	700
49.26	74777/1518	K303_0490 ME10	3800	3500	6000	0.70	29	≤19	10.0	5.0	2.5	16	253	253	316
53.88	8729/162	K303_0540 ME20	3700	3500	6000	2.7	30	≤24	10.0	5.0	2.5	16	350	385	700

i	i_{exakt}	Type	n_{1MAXDB} EL1,2 [rpm]	n_{1MAXDB} EL3,4,5,6 [rpm]	n_{1MAXZB} [rpm]	J_1 [kgcm²]	m [kg]	d_{MW} [mm]	$\Delta\varphi_2$ [arcmin]	$\Delta\varphi_{2redII}$ [arcmin]	$\Delta\varphi_{2redI}$ [arcmin]	C_2 [Nm/arcmin]	M_{2N} [Nm]	M_{2acc} [Nm]	M_{2NOT} [Nm]
K303 ($M_{2acc,max}$ = 385 Nm)															
54.58	70735/1296	K303_0550 ME10	3800	3500	6000	0.71	29	≤19	10.0	5.0	2.5	16	280	280	350
65.50	32422/495	K303_0650 ME20	3700	3500	6000	2.7	30	≤24	10.0	5.0	2.5	16	350	385	700
66.35	26273/396	K303_0660 ME10	3800	3500	6000	0.68	29	≤19	10.0	5.0	2.5	16	339	340	425
66.87	46139/690	K303_0670 ME20	3700	3500	6000	2.7	30	≤24	10.0	5.0	2.5	16	350	385	700
67.73	74777/1104	K303_0680 ME10	3800	3500	6000	0.70	29	≤19	10.0	5.0	2.5	16	347	347	434
78.41	103501/1320	K303_0780 ME20	3700	3500	6000	2.7	30	≤24	10.0	5.0	2.5	16	350	385	700
79.42	167743/2112	K303_0790 ME10	3800	3500	6000	0.67	29	≤19	10.0	5.0	2.5	16	350	385	509
90.06	16211/180	K303_0900 ME20	3700	3500	6000	2.7	30	≤24	10.0	5.0	2.5	16	350	385	700
91.23	26273/288	K303_0910 ME10	3800	3500	6000	0.68	29	≤19	10.0	5.0	2.5	16	350	385	585
107.8	103501/960	K303_1080 ME20	3700	3500	6000	2.7	30	≤24	10.0	5.0	2.5	16	350	385	700
109.2	167743/1536	K303_1090 ME10	3800	3500	6000	0.67	29	≤19	10.0	5.0	2.5	16	350	385	700
134.3	8729/65	K303_1340 ME20	3700	3500	6000	2.7	30	≤24	10.0	5.0	2.5	16	350	385	700
136.0	14147/104	K303_1360 ME10	3800	3500	6000	0.66	29	≤19	10.0	5.0	2.5	16	350	385	700
178.7	53621/300	K303_1790 ME20	3700	3500	6000	2.7	30	≤24	10.0	5.0	2.5	16	344	385	688
181.0	86903/480	K303_1810 ME10	3800	3500	6000	0.66	29	≤19	10.0	5.0	2.5	16	344	385	688
218.2	38399/176	K303_2180 ME10	3800	3500	6000	0.65	29	≤19	10.0	5.0	2.5	16	265	318	529
271.9	313255/1152	K303_2720 ME10	3800	3500	6000	0.65	29	≤19	10.0	5.0	2.5	16	212	237	297
K402 ($M_{2acc,max}$ = 600 Nm)															
4.000	4/1	K402_0040 ME30	2600	2200	3800	19	40	≤38	10.0	4.0	1.5	30	306	459	776
4.000	4/1	K402_0040 ME40	2600	2200	3800	41	45	≤48	10.0	4.0	1.5	30	306	459	776
4.364	48/11	K402_0044 ME30	2600	2200	3800	18	40	≤38	10.0	4.0	1.5	30	315	472	847
4.364	48/11	K402_0044 ME40	2600	2200	3800	40	45	≤48	10.0	4.0	1.5	30	315	472	847
5.422	1849/341	K402_0054 ME30	2600	2200	3800	16	40	≤38	10.0	4.0	1.5	30	338	508	1052
5.422	1849/341	K402_0054 ME40	2600	2200	3800	37	45	≤48	10.0	4.0	1.5	30	338	508	1052
6.000	6/1	K402_0060 ME30	2600	2200	3800	16	40	≤38	10.0	4.0	1.5	30	350	525	1100
6.000	6/1	K402_0060 ME40	2600	2200	3800	38	45	≤48	10.0	4.0	1.5	30	350	525	1100
6.719	215/32	K402_0067 ME20	3000	2600	4500	8.3	38	≤32	10.0	4.0	1.5	30	363	391	489
6.719	215/32	K402_0067 ME30	3000	2600	4500	14	40	≤38	10.0	4.0	1.5	31	363	545	1100
6.719	215/32	K402_0067 ME40	3000	2600	4500	36	45	≤48	10.0	4.0	1.5	30	363	545	1100
7.456	1849/248	K402_0075 ME30	2600	2200	3800	15	40	≤38	10.0	4.0	1.5	31	376	564	1100
7.456	1849/248	K402_0075 ME40	2600	2200	3800	36	45	≤48	10.0	4.0	1.5	31	376	564	1100
8.377	645/77	K402_0084 ME20	3000	2600	4500	7.0	38	≤32	10.0	4.0	1.5	30	391	488	610
8.377	645/77	K402_0084 ME30	3000	2600	4500	13	40	≤38	10.0	4.0	1.5	31	391	587	1100
8.377	645/77	K402_0084 ME40	3000	2600	4500	34	45	≤48	10.0	4.0	1.5	31	391	587	1100
9.238	2365/256	K402_0092 ME20	3000	2600	4500	7.6	38	≤32	10.0	4.0	1.5	30	404	538	672
9.238	2365/256	K402_0092 ME30	3000	2600	4500	13	40	≤38	10.0	4.0	1.5	31	404	600	1100
9.238	2365/256	K402_0092 ME40	3000	2600	4500	35	45	≤48	10.0	4.0	1.5	31	404	600	1100
10.10	1333/132	K402_0100 ME20	3400	3000	5000	6.3	38	≤32	10.0	4.0	1.5	30	416	588	735
10.10	1333/132	K402_0100 ME30	3400	3000	5000	12	40	≤38	10.0	4.0	1.5	31	416	600	1100
10.10	1333/132	K402_0100 ME40	3000	3000	4500	34	45	≤48	10.0	4.0	1.5	31	416	600	1100
11.52	645/56	K402_0115 ME20	3000	2600	4500	6.6	38	≤32	10.0	4.0	1.5	31	435	600	838
11.52	645/56	K402_0115 ME30	3000	2600	4500	12	40	≤38	10.0	4.0	1.5	31	435	600	1100
11.52	645/56	K402_0115 ME40	3000	2600	4500	34	45	≤48	10.0	4.0	1.5	31	435	600	1100
12.66	2924/231	K402_0125 ME20	3400	3000	5000	5.6	38	≤32	10.0	4.0	1.5	31	449	600	869
12.66	2924/231	K402_0125 ME30	3400	3000	5000	11	40	≤38	10.0	4.0	1.5	31	449	600	1100
12.66	2924/231	K402_0125 ME40	3000	3000	4500	33	45	≤48	10.0	4.0	1.5	31	449	600	1100
13.89	1333/96	K402_0140 ME20	3400	3000	5000	6.0	38	≤32	10.0	4.0	1.5	31	463	600	1010
13.89	1333/96	K402_0140 ME30	3400	3000	5000	11	40	≤38	10.0	4.0	1.5	31	463	600	1100
13.89	1333/96	K402_0140 ME40	3000	3000	4500	33	45	≤48	10.0	4.0	1.5	31	463	600	1100
16.94	559/33	K402_0170 ME20	3600	3300	5500	5.0	38	≤32	10.0	4.0	1.5	31	495	600	1013
16.94	559/33	K402_0170 ME30	3500	3300	5000	10	40	≤38	10.0	4.0	1.5	31	495	600	1100
16.94	559/33	K402_0170 ME40	3000	3000	4500	32	45	≤48	10.0	4.0	1.5	31	495	600	1100
17.41	731/42	K402_0175 ME20	3400	3000	5000	5.4	38	≤32	10.0	4.0	1.5	31	499	600	1100
17.41	731/42	K402_0175 ME30	3400	3000	5000	11	40	≤38	10.0	4.0	1.5	31	499	600	1100
17.41	731/42	K402_0175 ME40	3000	3000	4500	33	45	≤48	10.0	4.0	1.5	31	499	600	1100
20.20	1333/66	K402_0200 ME20	3600	3300	5500	4.8	38	≤32	10.0	4.0	1.5	31	524	600	1100
20.20	1333/66	K402_0200 ME30	3500	3300	5000	10	40	≤38	10.0	4.0	1.5	31	524	600	1100
23.29	559/24	K402_0230 ME20	3600	3300	5500	4.9	38	≤32	10.0	4.0	1.5	31	550	600	1100
23.29	559/24	K402_0230 ME30	3500	3300	5000	10	40	≤38	10.0	4.0	1.5	31	550	600	1100
23.29	559/24	K402_0230 ME40	3000	3000	4500	32	45	≤48	10.0	4.0	1.5	31	550	600	1100
25.28	4171/165	K402_0250 ME20	3600	3300	5500	4.5	38	≤32	10.0	4.0	1.5	31	501	600	1001
25.28	4171/165	K402_0250 ME30	3500	3300	5000	9.9	40	≤38	10.0	4.0	1.5	31	501	600	1001
27.77	1333/48	K402_0280 ME20	3600	3300	5500	4.7	38	≤32	10.0	4.0	1.5	31	550	600	1100
27.77	1333/48	K402_0280 ME30	3500	3300	5000	10	40	≤38	10.0	4.0	1.5	31	550	600	1100

i	i_{exakt}	Type	n_{1MAXDB} EL1,2 [rpm]	n_{1MAXDB} EL3,4,5,6 [rpm]	n_{1MAXZB} [rpm]	J_1 [kgcm²]	m [kg]	d_{MW} [mm]	$\Delta\varphi_2$ [arcmin]	$\Delta\varphi_{2redII}$ [arcmin]	$\Delta\varphi_{2redI}$ [arcmin]	C_2 [Nm/arcmin]	M_{2N} [Nm]	M_{2acc} [Nm]	M_{2NOT} [Nm]
K402 ($M_{2acc,max}$ = 600 Nm)															
33.68	4816/143	K402_0340 ME20	3600	3300	5500	2.8	38	≤24	10.0	4.0	1.5	31	389	467	715
34.76	4171/120	K402_0350 ME20	3600	3300	5500	4.5	38	≤32	10.0	4.0	1.5	31	550	600	1100
34.76	4171/120	K402_0350 ME30	3500	3300	5000	9.8	40	≤38	10.0	4.0	1.5	31	550	600	1100
40.51	4902/121	K402_0410 ME20	3600	3300	5500	2.7	38	≤24	10.0	4.0	1.5	31	308	370	616
46.31	602/13	K402_0460 ME20	3600	3300	5500	2.8	38	≤24	10.0	4.0	1.5	31	535	600	983
50.43	5547/110	K402_0500 ME20	3600	3300	5500	2.7	38	≤24	10.0	4.0	1.5	31	270	323	539
55.71	2451/44	K402_0560 ME20	3600	3300	5500	2.7	38	≤24	10.0	4.0	1.5	31	424	508	847
69.34	5547/80	K402_0690 ME20	3600	3300	5500	2.7	38	≤24	10.0	4.0	1.5	31	371	445	741
K403 ($M_{2acc,max}$ = 600 Nm)															
32.39	2494/77	K403_0320 ME20	3600	3300	5500	2.9	42	≤24	10.0	5.0	2.5	31	458	458	572
35.72	13717/384	K403_0360 ME20	3600	3300	5500	2.9	42	≤24	10.0	5.0	2.5	31	505	505	631
39.05	38657/990	K403_0390 ME20	3600	3300	5500	2.8	42	≤24	10.0	5.0	2.5	31	550	552	690
44.54	1247/28	K403_0450 ME20	3600	3300	5500	2.8	42	≤24	10.0	5.0	2.5	31	550	600	787
48.94	169592/3465	K403_0490 ME20	3600	3300	5500	2.8	42	≤24	10.0	5.0	2.5	31	550	600	865
53.69	38657/720	K403_0540 ME20	3600	3300	5500	2.8	42	≤24	10.0	5.0	2.5	31	550	600	948
65.50	32422/495	K403_0650 ME20	3600	3300	5500	2.7	42	≤24	10.0	5.0	2.5	31	550	600	1013
66.35	26273/396	K403_0660 ME10	3600	3300	5500	0.71	41	≤19	10.0	5.0	2.5	31	340	340	425
67.30	21199/315	K403_0670 ME20	3600	3300	5500	2.8	42	≤24	10.0	5.0	2.5	31	550	600	1100
78.10	38657/495	K403_0780 ME20	3600	3300	5500	2.7	42	≤24	10.0	5.0	2.5	31	550	600	1100
79.11	62651/792	K403_0790 ME10	3600	3300	5500	0.69	41	≤19	10.0	5.0	2.5	31	404	406	507
90.06	16211/180	K403_0900 ME20	3600	3300	5500	2.7	42	≤24	10.0	5.0	2.5	31	550	600	1100
91.23	26273/288	K403_0910 ME10	3600	3300	5500	0.70	41	≤19	10.0	5.0	2.5	31	468	468	585
107.4	38657/360	K403_1070 ME20	3600	3300	5500	2.7	42	≤24	10.0	5.0	2.5	31	550	600	1100
108.8	62651/576	K403_1090 ME10	3600	3300	5500	0.69	41	≤19	10.0	5.0	2.5	31	550	558	697
134.4	120959/900	K403_1340 ME20	3600	3300	5500	2.7	42	≤24	10.0	5.0	2.5	31	550	600	1100
136.1	196037/1440	K403_1360 ME10	3600	3300	5500	0.68	41	≤19	10.0	5.0	2.5	31	550	600	807
179.1	34916/195	K403_1790 ME20	3600	3300	5500	2.7	42	≤24	10.0	5.0	2.5	31	535	600	983
181.4	14147/78	K403_1810 ME10	3600	3300	5500	0.67	41	≤19	10.0	5.0	2.5	31	535	600	983
215.4	23693/110	K403_2150 ME20	3600	3300	5500	2.7	42	≤24	10.0	5.0	2.5	31	424	508	847
218.2	38399/176	K403_2180 ME10	3600	3300	5500	0.66	41	≤19	10.0	5.0	2.5	31	424	508	847
271.6	86903/320	K403_2720 ME10	3600	3300	5500	0.66	41	≤19	10.0	5.0	2.5	31	371	445	741
K513 ($M_{2acc,max}$ = 1000 Nm)															
7.347	551/75	K513_0073 ME30	1900	1800	3200	25	46	≤38	10.0	5.0	2.0	49	694	1000	1405
7.347	551/75	K513_0073 ME40	1900	1800	3200	47	51	≤48	10.0	5.0	2.0	49	694	1000	1405
8.134	17081/2100	K513_0081 ME30	1900	1800	3200	24	46	≤38	10.0	5.0	2.0	49	718	1000	1555
8.134	17081/2100	K513_0081 ME40	1900	1800	3200	46	51	≤48	10.0	5.0	2.0	49	718	1000	1555
9.168	1421/155	K513_0092 ME30	1900	1800	3200	21	46	≤38	10.0	5.0	2.0	49	748	1000	1753
9.168	1421/155	K513_0092 ME40	1900	1800	3200	43	51	≤48	10.0	5.0	2.0	49	748	1000	1753
10.15	203/20	K513_0100 ME30	1900	1800	3200	20	46	≤38	10.0	5.0	2.0	49	773	1000	1800
10.15	203/20	K513_0100 ME40	1900	1800	3200	42	51	≤48	10.0	5.0	2.0	49	773	1000	1800
11.57	10759/930	K513_0115 ME30	2300	2200	3600	17	46	≤38	10.0	5.0	2.0	49	808	1000	1800
11.57	10759/930	K513_0115 ME40	2300	2200	3600	39	51	≤48	10.0	5.0	2.0	49	808	1000	1800
12.81	1537/120	K513_0130 ME30	2300	2200	3600	17	46	≤38	10.0	5.0	2.0	49	836	1000	1800
12.81	1537/120	K513_0130 ME40	2300	2200	3600	39	51	≤48	10.0	5.0	2.0	49	836	1000	1800
14.54	5887/405	K513_0145 ME20	2300	2200	3600	9.7	44	≤32	10.0	5.0	2.0	49	833	833	1042
14.54	5887/405	K513_0145 ME30	2300	2200	3600	15	46	≤38	10.0	5.0	2.0	49	872	1000	1800
14.54	5887/405	K513_0145 ME40	2300	2200	3600	37	51	≤48	10.0	5.0	2.0	49	872	1000	1800
16.09	26071/1620	K513_0160 ME20	2300	2200	3600	9.3	44	≤32	10.0	5.0	2.0	49	900	923	1153
16.09	26071/1620	K513_0160 ME30	2300	2200	3600	15	46	≤38	10.0	5.0	2.0	49	900	1000	1800
16.09	26071/1620	K513_0160 ME40	2300	2200	3600	37	51	≤48	10.0	5.0	2.0	49	900	1000	1800
17.48	6293/360	K513_0175 ME20	2800	2500	4200	8.4	44	≤32	10.0	5.0	2.0	49	899	1000	1253
17.48	6293/360	K513_0175 ME30	2800	2500	4200	14	46	≤38	10.0	5.0	2.0	49	900	1000	1800
17.48	6293/360	K513_0175 ME40	2800	2500	4200	36	51	≤48	10.0	5.0	2.0	49	900	1000	1800
19.35	27869/1440	K513_0195 ME20	2800	2500	4200	8.1	44	≤32	10.0	5.0	2.0	49	900	1000	1387
19.35	27869/1440	K513_0195 ME30	2800	2500	4200	14	46	≤38	10.0	5.0	2.0	49	900	1000	1800
19.35	27869/1440	K513_0195 ME40	2800	2500	4200	35	51	≤48	10.0	5.0	2.0	49	900	1000	1800
21.99	2639/120	K513_0220 ME20	2800	2500	4200	7.1	44	≤32	10.0	5.0	2.0	49	900	1000	1465
21.99	2639/120	K513_0220 ME30	2800	2500	4200	13	46	≤38	10.0	5.0	2.0	49	900	1000	1800
21.99	2639/120	K513_0220 ME40	2800	2500	4200	34	51	≤48	10.0	5.0	2.0	49	900	1000	1800
24.35	11687/480	K513_0240 ME20	2800	2500	4200	6.9	44	≤32	10.0	5.0	2.0	49	900	1000	1622
24.35	11687/480	K513_0240 ME30	2800	2500	4200	12	46	≤38	10.0	5.0	2.0	49	900	1000	1800
24.35	11687/480	K513_0240 ME40	2800	2500	4200	34	51	≤48	10.0	5.0	2.0	49	900	1000	1800
29.18	4669/160	K513_0290 ME20	3400	3000	5000	6.0	44	≤32	10.0	5.0	2.0	49	900	1000	1656
29.18	4669/160	K513_0290 ME30	3400	3000	5000	12	46	≤38	10.0	5.0	2.0	49	900	1000	1800

i	i_{exakt}	Type	n_{1MAXDB} EL1,2 [rpm]	n_{1MAXDB} EL3,4,5,6 [rpm]	n_{1MAXZB} [rpm]	J_1 [kgcm²]	m [kg]	d_{MW} [mm]	$\Delta\varphi_2$ [arcmin]	$\Delta\varphi_{2redII}$ [arcmin]	$\Delta\varphi_{2redI}$ [arcmin]	C_2 [Nm/ arcmin]	M_{2N} [Nm]	M_{2acc} [Nm]	M_{2NOT} [Nm]
K513 ($M_{2acc,max}$ = 1000 Nm)															
29.18	4669/160	K513_0290 ME40	3000	3000	4500	33	51	≤48	10.0	5.0	2.0	49	900	1000	1800
32.31	20677/640	K513_0320 ME20	3400	3000	5000	5.9	44	≤32	10.0	5.0	2.0	49	900	1000	1800
32.31	20677/640	K513_0320 ME30	3400	3000	5000	11	46	≤38	10.0	5.0	2.0	49	900	1000	1800
32.31	20677/640	K513_0320 ME40	3000	3000	4500	33	51	≤48	10.0	5.0	2.0	49	900	1000	1800
34.80	174/5	K513_0350 ME20	3400	3000	5000	5.6	44	≤32	10.0	5.0	2.0	49	900	1000	1781
34.80	174/5	K513_0350 ME30	3400	3000	5000	11	46	≤38	10.0	5.0	2.0	49	900	1000	1781
38.53	2697/70	K513_0390 ME20	3400	3000	5000	5.5	44	≤32	10.0	5.0	2.0	49	900	1000	1800
38.53	2697/70	K513_0390 ME30	3400	3000	5000	11	46	≤38	10.0	5.0	2.0	49	900	1000	1800
43.50	87/2	K513_0440 ME20	3400	3000	5000	5.1	44	≤32	10.0	5.0	2.0	49	900	1000	1800
43.50	87/2	K513_0440 ME30	3400	3000	5000	10	46	≤38	10.0	5.0	2.0	49	900	1000	1800
48.16	2697/56	K513_0480 ME20	3400	3000	5000	5.0	44	≤32	10.0	5.0	2.0	49	900	1000	1800
48.16	2697/56	K513_0480 ME30	3400	3000	5000	10	46	≤38	10.0	5.0	2.0	49	900	1000	1800
58.30	11368/195	K513_0580 ME20	3400	3000	5000	4.7	44	≤32	10.0	5.0	2.0	49	900	1000	1800
58.30	11368/195	K513_0580 ME30	3400	3000	5000	10	46	≤38	10.0	5.0	2.0	50	900	1000	1800
64.54	12586/195	K513_0650 ME20	3400	3000	5000	4.6	44	≤32	10.0	5.0	2.0	49	900	1000	1800
64.54	12586/195	K513_0650 ME30	3400	3000	5000	10	46	≤38	10.0	5.0	2.0	50	900	1000	1800
70.08	841/12	K513_0700 ME20	3400	3000	5000	3.0	44	≤24	10.0	5.0	2.0	49	821	985	1276
77.59	26071/336	K513_0780 ME20	3400	3000	5000	3.0	44	≤24	10.0	5.0	2.0	49	900	1000	1413
87.29	8729/100	K513_0870 ME20	3400	3000	5000	2.8	44	≤24	10.0	5.0	2.0	49	689	827	1317
96.64	38657/400	K513_0970 ME20	3400	3000	5000	2.8	44	≤24	10.0	5.0	2.0	49	763	916	1458
K514 ($M_{2acc,max}$ = 1000 Nm)															
85.03	76531/900	K514_0850 ME20	3400	3000	5000	2.9	48	≤24	10.0	6.0	3.0	49	900	1000	1465
94.15	338923/3600	K514_0940 ME20	3400	3000	5000	2.9	48	≤24	10.0	6.0	3.0	49	900	1000	1622
112.8	135401/1200	K514_1130 ME20	3400	3000	5000	2.8	48	≤24	10.0	6.0	3.0	50	900	1000	1656
124.9	599633/4800	K514_1250 ME20	3400	3000	5000	2.8	48	≤24	10.0	6.0	3.0	50	900	1000	1800
134.6	3364/25	K514_1350 ME20	3400	3000	5000	2.8	48	≤24	10.0	6.0	3.0	50	900	1000	1781
149.0	26071/175	K514_1490 ME20	3400	3000	5000	2.8	48	≤24	10.0	6.0	3.0	50	900	1000	1800
168.2	841/5	K514_1680 ME20	3400	3000	5000	2.8	48	≤24	10.0	6.0	3.0	50	900	1000	1800
186.2	26071/140	K514_1860 ME20	3400	3000	5000	2.8	48	≤24	10.0	6.0	3.0	50	900	1000	1800
225.4	659344/2925	K514_2250 ME20	3400	3000	5000	2.7	48	≤24	10.0	6.0	3.0	50	900	1000	1800
249.6	729988/2925	K514_2500 ME20	3400	3000	5000	2.7	48	≤24	10.0	6.0	3.0	50	900	1000	1800
271.0	24389/90	K514_2710 ME20	3400	3000	5000	2.7	48	≤24	10.0	6.0	3.0	50	821	985	1276
300.0	756059/2520	K514_3000 ME20	3400	3000	5000	2.7	48	≤24	10.0	6.0	3.0	50	900	1000	1413
337.5	253141/750	K514_3380 ME20	3400	3000	5000	2.7	48	≤24	10.0	6.0	3.0	50	689	827	1317
373.7	1121053/3000	K514_3740 ME20	3400	3000	5000	2.7	48	≤24	10.0	6.0	3.0	50	763	916	1458
K613 ($M_{2acc,max}$ = 1600 Nm)															
7.323	19215/2624	K613_0073 ME30	1800	1700	3000	39	67	≤38	10.0	5.0	2.0	81	916	1120	1400
7.323	19215/2624	K613_0073 ME40	1800	1700	3000	61	72	≤48	10.0	5.0	2.0	81	916	1375	2625
7.323	19215/2624	K613_0073 ME50	1800	1700	3000	89	80	≤60	10.0	5.0	2.0	81	916	1375	2625
8.107	85095/10496	K613_0081 ME30	1800	1700	3000	36	67	≤38	10.0	5.0	2.0	81	948	1240	1550
8.107	85095/10496	K613_0081 ME40	1800	1700	3000	59	72	≤48	10.0	5.0	2.0	81	948	1422	2900
8.107	85095/10496	K613_0081 ME50	1800	1700	3000	87	80	≤60	10.0	5.0	2.0	82	948	1422	2900
11.41	22631/1984	K613_0115 ME30	2200	2000	3500	25	67	≤38	10.0	5.0	2.0	82	1062	1594	2181
11.41	22631/1984	K613_0115 ME40	2200	2000	3500	46	72	≤48	10.0	5.0	2.0	82	1062	1594	2181
11.41	22631/1984	K613_0115 ME50	2200	2000	3500	75	80	≤60	10.0	5.0	2.0	82	1062	1594	2181
12.63	3233/256	K613_0125 ME30	2200	2000	3500	24	67	≤38	10.0	5.0	2.0	82	1099	1600	2414
12.63	3233/256	K613_0125 ME40	2200	2000	3500	45	72	≤48	10.0	5.0	2.0	82	1099	1600	2414
12.63	3233/256	K613_0125 ME50	2200	2000	3500	75	80	≤60	10.0	5.0	2.0	82	1099	1600	2414
14.33	12383/864	K613_0145 ME30	2200	2000	3500	20	67	≤38	10.0	5.0	2.0	82	1146	1600	2739
14.33	12383/864	K613_0145 ME40	2200	2000	3500	42	72	≤48	10.0	5.0	2.0	82	1146	1600	2739
14.33	12383/864	K613_0145 ME50	2200	2000	3500	71	80	≤60	10.0	5.0	2.0	82	1146	1600	2739
15.87	54839/3456	K613_0160 ME30	2200	2000	3500	20	67	≤38	10.0	5.0	2.0	82	1186	1600	2900
15.87	54839/3456	K613_0160 ME40	2200	2000	3500	42	72	≤48	10.0	5.0	2.0	82	1186	1600	2900
15.87	54839/3456	K613_0160 ME50	2200	2000	3500	71	80	≤60	10.0	5.0	2.0	82	1186	1600	2900
17.16	549/32	K613_0170 ME20	2600	2300	4000	12	65	≤32	10.0	5.0	2.0	82	984	984	1229
17.16	549/32	K613_0170 ME30	2600	2300	4000	18	67	≤38	10.0	5.0	2.0	82	1217	1600	2900
17.16	549/32	K613_0170 ME40	2600	2300	4000	39	72	≤48	10.0	5.0	2.0	82	1217	1600	2900
17.16	549/32	K613_0170 ME50	2500	2300	4000	69	80	≤60	10.0	5.0	2.0	82	1217	1600	2900
18.99	17019/896	K613_0190 ME20	2600	2300	4000	12	65	≤32	10.0	5.0	2.0	82	1089	1089	1361
18.99	17019/896	K613_0190 ME30	2600	2300	4000	17	67	≤38	10.0	5.0	2.0	82	1259	1600	2900
18.99	17019/896	K613_0190 ME40	2600	2300	4000	39	72	≤48	10.0	5.0	2.0	82	1259	1600	2900
18.99	17019/896	K613_0190 ME50	2500	2300	4000	68	80	≤60	10.0	5.0	2.0	82	1259	1600	2900
21.68	5551/256	K613_0220 ME30	2600	2300	4000	15	67	≤38	10.0	5.0	2.0	82	1316	1600	2900
21.68	5551/256	K613_0220 ME40	2600	2300	4000	37	72	≤48	10.0	5.0	2.0	82	1316	1600	2900

i	i_{exakt}	Type	n_{1MAXDB} EL1,2 [rpm]	n_{1MAXDB} EL3,4,5,6 [rpm]	n_{1MAXZB} [rpm]	J_1 [kgcm²]	m [kg]	d_{MW} [mm]	$\Delta\varphi_2$ [arcmin]	$\Delta\varphi_{2redII}$ [arcmin]	$\Delta\varphi_{2redI}$ [arcmin]	C_2 [Nm/arcmin]	M_{2N} [Nm]	M_{2acc} [Nm]	M_{2NOT} [Nm]
K613 ($M_{2acc,max}$ = 1600 Nm)															
21.68	5551/256	K613_0220 ME50	2500	2300	4000	66	80	≤60	10.0	5.0	2.0	82	1316	1600	2900
24.01	24583/1024	K613_0240 ME30	2600	2300	4000	15	67	≤38	10.0	5.0	2.0	82	1361	1600	2900
24.01	24583/1024	K613_0240 ME40	2600	2300	4000	37	72	≤48	10.0	5.0	2.0	82	1361	1600	2900
24.01	24583/1024	K613_0240 ME50	2500	2300	4000	66	80	≤60	10.0	5.0	2.0	82	1361	1600	2900
28.77	29463/1024	K613_0290 ME20	3100	2800	4500	7.8	65	≤32	10.0	5.0	2.0	82	1169	1448	1809
28.77	29463/1024	K613_0290 ME30	3100	2800	4500	13	67	≤38	10.0	5.0	2.0	82	1446	1600	2900
28.77	29463/1024	K613_0290 ME40	3000	2800	4500	35	72	≤48	10.0	5.0	2.0	82	1446	1600	2900
28.77	29463/1024	K613_0290 ME50	2500	2500	4000	64	80	≤60	10.0	5.0	2.0	82	1446	1600	2900
31.86	130479/4096	K613_0320 ME20	3100	2800	4500	7.6	65	≤32	10.0	5.0	2.0	82	1294	1600	2003
31.86	130479/4096	K613_0320 ME30	3100	2800	4500	13	67	≤38	10.0	5.0	2.0	82	1450	1600	2900
31.86	130479/4096	K613_0320 ME40	3000	2800	4500	35	72	≤48	10.0	5.0	2.0	82	1450	1600	2900
31.86	130479/4096	K613_0320 ME50	2500	2500	4000	64	80	≤60	10.0	5.0	2.0	82	1450	1600	2900
34.61	35441/1024	K613_0350 ME20	3100	2800	4500	6.8	65	≤32	10.0	5.0	2.0	82	1196	1571	1964
34.61	35441/1024	K613_0350 ME30	3100	2800	4500	12	67	≤38	10.0	5.0	2.0	82	1450	1600	2900
34.61	35441/1024	K613_0350 ME40	3000	2800	4500	34	72	≤48	10.0	5.0	2.0	82	1450	1600	2900
34.61	35441/1024	K613_0350 ME50	2500	2500	4000	63	80	≤60	10.0	5.0	2.0	82	1450	1600	2900
38.32	156953/4096	K613_0380 ME20	3100	2800	4500	6.7	65	≤32	10.0	5.0	2.0	82	1324	1600	2174
38.32	156953/4096	K613_0380 ME30	3100	2800	4500	12	67	≤38	10.0	5.0	2.0	82	1450	1600	2900
38.32	156953/4096	K613_0380 ME40	3000	2800	4500	34	72	≤48	10.0	5.0	2.0	82	1450	1600	2900
38.32	156953/4096	K613_0380 ME50	2500	2500	4000	63	80	≤60	10.0	5.0	2.0	82	1450	1600	2900
43.11	8967/208	K613_0430 ME20	3100	2800	4500	6.0	65	≤32	10.0	5.0	2.0	82	1227	1600	2072
43.11	8967/208	K613_0430 ME30	3100	2800	4500	11	67	≤38	10.0	5.0	2.0	82	1450	1600	2072
47.73	39711/832	K613_0480 ME20	3100	2800	4500	5.9	65	≤32	10.0	5.0	2.0	82	1359	1600	2294
47.73	39711/832	K613_0480 ME30	3100	2800	4500	11	67	≤38	10.0	5.0	2.0	82	1450	1600	2294
57.55	29463/512	K613_0580 ME20	3100	2800	4500	5.2	65	≤32	10.0	5.0	2.0	82	1295	1600	2803
57.55	29463/512	K613_0580 ME30	3100	2800	4500	11	67	≤38	10.0	5.0	2.0	82	1450	1600	2803
63.71	130479/2048	K613_0640 ME20	3100	2800	4500	5.2	65	≤32	10.0	5.0	2.0	82	1434	1600	2900
63.71	130479/2048	K613_0640 ME30	3100	2800	4500	10	67	≤38	10.0	5.0	2.0	82	1450	1600	2900
68.77	28609/416	K613_0690 ME20	3100	2800	4500	4.9	65	≤32	10.0	5.0	2.0	82	1311	1577	2628
68.77	28609/416	K613_0690 ME30	3100	2800	4500	10	67	≤38	10.0	5.0	2.0	82	1314	1577	2628
76.14	126697/1664	K613_0760 ME20	3100	2800	4500	4.9	65	≤32	10.0	5.0	2.0	82	1450	1600	2900
76.14	126697/1664	K613_0760 ME30	3100	2800	4500	10	67	≤38	10.0	5.0	2.0	82	1450	1600	2900
86.18	66185/768	K613_0860 ME20	3100	2800	4500	3.1	65	≤24	10.0	5.0	2.0	82	971	1165	1473
95.41	293105/3072	K613_0950 ME20	3100	2800	4500	3.1	65	≤24	10.0	5.0	2.0	82	1075	1290	1631
K614 ($M_{2acc,max}$ = 1600 Nm)															
111.3	284809/2560	K614_1110 ME20	3100	2800	4500	2.9	69	≤24	10.0	6.0	3.0	82	1448	1448	1809
123.2	1261297/10240	K614_1230 ME20	3100	2800	4500	2.9	69	≤24	10.0	6.0	3.0	82	1450	1600	2003
133.8	1027789/7680	K614_1340 ME20	3100	2800	4500	2.9	69	≤24	10.0	6.0	3.0	82	1450	1571	1964
148.2	4551637/30720	K614_1480 ME20	3100	2800	4500	2.9	69	≤24	10.0	6.0	3.0	82	1450	1600	2174
166.7	86681/520	K614_1670 ME20	3100	2800	4500	2.8	69	≤24	10.0	6.0	3.0	83	1450	1600	2072
184.6	383873/2080	K614_1850 ME20	3100	2800	4500	2.8	69	≤24	10.0	6.0	3.0	83	1450	1600	2294
222.5	284809/1280	K614_2230 ME20	3100	2800	4500	2.8	69	≤24	10.0	6.0	3.0	83	1450	1600	2803
246.3	1261297/5120	K614_2460 ME20	3100	2800	4500	2.8	69	≤24	10.0	6.0	3.0	83	1450	1600	2900
265.9	829661/3120	K614_2660 ME20	3100	2800	4500	2.8	69	≤24	10.0	6.0	3.0	83	1314	1577	2628
294.4	3674213/12480	K614_2940 ME20	3100	2800	4500	2.7	69	≤24	10.0	6.0	3.0	83	1450	1600	2900
333.2	383873/1152	K614_3330 ME20	3100	2800	4500	2.7	69	≤24	10.0	6.0	3.0	83	971	1165	1473
368.9	1700009/4608	K614_3690 ME20	3100	2800	4500	2.7	69	≤24	10.0	6.0	3.0	83	1075	1290	1631
K713 ($M_{2acc,max}$ = 2600 Nm)															
7.563	19845/2624	K713_0076 ME40	1700	1600	2700	91	101	≤48	10.0	5.0	2.0	122	1516	2169	2712
7.563	19845/2624	K713_0076 ME50	1700	1600	2700	119	108	≤60	10.0	5.0	2.0	123	1516	2169	2712
8.373	87885/10496	K713_0084 ME40	1700	1600	2700	87	101	≤48	10.0	5.0	2.0	123	1568	2353	3002
8.373	87885/10496	K713_0084 ME50	1700	1600	2700	115	108	≤60	10.0	5.0	2.0	124	1568	2353	3002
9.188	147/16	K713_0092 ME40	1700	1600	2700	76	101	≤48	10.0	5.0	2.0	123	1618	2427	3292
9.188	147/16	K713_0092 ME50	1700	1600	2700	104	108	≤60	10.0	5.0	2.0	124	1618	2427	3292
10.17	651/64	K713_0100 ME40	1700	1600	2700	74	101	≤48	10.0	5.0	2.0	124	1674	2510	3645
10.17	651/64	K713_0100 ME50	1700	1600	2700	102	108	≤60	10.0	5.0	2.0	124	1674	2510	3645
11.78	23373/1984	K713_0120 ME30	2000	1900	3200	40	96	≤38	10.0	5.0	2.0	124	1477	1802	2252
11.78	23373/1984	K713_0120 ME40	2000	1900	3200	63	101	≤48	10.0	5.0	2.0	124	1758	2600	4223
11.78	23373/1984	K713_0120 ME50	2000	1900	3200	91	108	≤60	10.0	5.0	2.0	125	1758	2600	4223
13.04	3339/256	K713_0130 ME30	2000	1900	3200	39	96	≤38	10.0	5.0	2.0	124	1636	1995	2493
13.04	3339/256	K713_0130 ME40	2000	1900	3200	61	101	≤48	10.0	5.0	2.0	124	1818	2600	4675
13.04	3339/256	K713_0130 ME50	2000	1900	3200	89	108	≤60	10.0	5.0	2.0	125	1818	2600	4675
14.80	1421/96	K713_0150 ME30	2000	1900	3200	32	96	≤38	10.0	5.0	2.0	125	1626	2257	2822
14.80	1421/96	K713_0150 ME40	2000	1900	3200	54	101	≤48	10.0	5.0	2.0	125	1896	2600	4800

i	i_{exakt}	Type	n_{1MAXDB} EL1,2 [rpm]	n_{1MAXDB} EL3,4,5,6 [rpm]	n_{1MAXZB} [rpm]	J_1 [kgcm²]	m [kg]	d_{MW} [mm]	$\Delta\varphi_2$ [arcmin]	$\Delta\varphi_{2redII}$ [arcmin]	$\Delta\varphi_{2redI}$ [arcmin]	C_2 [Nm/ arcmin]	M_{2N} [Nm]	M_{2acc} [Nm]	M_{2NOT} [Nm]
K713 ($M_{2acc,max}$ = 2600 Nm)															
14.80	1421/96	K713_0150 ME50	2000	1900	3200	82	108	≤60	10.0	5.0	2.0	125	1896	2600	4800
16.39	6293/384	K713_0165 ME30	2000	1900	3200	31	96	≤38	10.0	5.0	2.0	125	1800	2499	3124
16.39	6293/384	K713_0165 ME40	2000	1900	3200	53	101	≤48	10.0	5.0	2.0	125	1962	2600	4800
16.39	6293/384	K713_0165 ME50	2000	1900	3200	81	108	≤60	10.0	5.0	2.0	125	1962	2600	4800
18.28	26901/1472	K713_0185 ME30	2400	2200	3600	26	96	≤38	10.0	5.0	2.0	125	1719	2562	3202
18.28	26901/1472	K713_0185 ME40	2400	2200	3600	49	101	≤48	10.0	5.0	2.0	125	2034	2600	4800
18.28	26901/1472	K713_0185 ME50	2400	2200	3600	77	108	≤60	10.0	5.0	2.0	125	2034	2600	4800
20.23	119133/5888	K713_0200 ME30	2400	2200	3600	26	96	≤38	10.0	5.0	2.0	125	1903	2600	3545
20.23	119133/5888	K713_0200 ME40	2400	2200	3600	48	101	≤48	10.0	5.0	2.0	125	2105	2600	4800
20.23	119133/5888	K713_0200 ME50	2400	2200	3600	76	108	≤60	10.0	5.0	2.0	125	2105	2600	4800
22.74	14553/640	K713_0230 ME30	2400	2200	3600	22	96	≤38	10.0	5.0	2.0	125	1832	2600	3774
22.74	14553/640	K713_0230 ME40	2400	2200	3600	44	101	≤48	10.0	5.0	2.0	125	2188	2600	4800
22.74	14553/640	K713_0230 ME50	2400	2200	3600	72	108	≤60	10.0	5.0	2.0	125	2188	2600	4800
25.18	64449/2560	K713_0250 ME30	2400	2200	3600	21	96	≤38	10.0	5.0	2.0	125	2029	2600	4179
25.18	64449/2560	K713_0250 ME40	2400	2200	3600	44	101	≤48	10.0	5.0	2.0	125	2264	2600	4800
25.18	64449/2560	K713_0250 ME50	2400	2200	3600	72	108	≤60	10.0	5.0	2.0	125	2264	2600	4800
29.29	7497/256	K713_0290 ME30	2900	2600	4200	18	96	≤38	10.0	5.0	2.0	125	1934	2600	4086
29.29	7497/256	K713_0290 ME40	2900	2600	4200	40	101	≤48	10.0	5.0	2.0	125	2381	2600	4800
29.29	7497/256	K713_0290 ME50	2500	2500	4000	68	108	≤60	10.0	5.0	2.0	125	2381	2600	4800
32.42	33201/1024	K713_0320 ME30	2900	2600	4200	17	96	≤38	10.0	5.0	2.0	125	2141	2600	4524
32.42	33201/1024	K713_0320 ME40	2900	2600	4200	40	101	≤48	10.0	5.0	2.0	125	2400	2600	4800
32.42	33201/1024	K713_0320 ME50	2500	2500	4000	68	108	≤60	10.0	5.0	2.0	125	2400	2600	4800
35.44	567/16	K713_0350 ME30	2900	2600	4200	15	96	≤38	10.0	5.0	2.0	125	2011	2600	4558
35.44	567/16	K713_0350 ME40	2900	2600	4200	37	101	≤48	10.0	5.0	2.0	125	2400	2600	4558
35.44	567/16	K713_0350 ME50	2500	2500	4000	66	108	≤60	10.0	5.0	2.0	125	2400	2600	4558
39.23	2511/64	K713_0390 ME30	2900	2600	4200	15	96	≤38	10.0	5.0	2.0	125	2226	2600	4800
39.23	2511/64	K713_0390 ME40	2900	2600	4200	37	101	≤48	10.0	5.0	2.0	125	2400	2600	4800
39.23	2511/64	K713_0390 ME50	2500	2500	4000	66	108	≤60	10.0	5.0	2.0	126	2400	2600	4800
45.05	37485/832	K713_0450 ME30	2900	2600	4200	14	96	≤38	10.0	5.0	2.0	126	2082	2600	4800
45.05	37485/832	K713_0450 ME40	2900	2600	4200	35	101	≤48	10.0	5.0	2.0	125	2400	2600	4800
45.05	37485/832	K713_0450 ME50	2500	2500	4000	64	108	≤60	10.0	5.0	2.0	126	2400	2600	4800
49.88	166005/3328	K713_0500 ME30	2900	2600	4200	13	96	≤38	10.0	5.0	2.0	126	2306	2600	4800
49.88	166005/3328	K713_0500 ME40	2900	2600	4200	35	101	≤48	10.0	5.0	2.0	126	2400	2600	4800
49.88	166005/3328	K713_0500 ME50	2500	2500	4000	64	108	≤60	10.0	5.0	2.0	126	2400	2600	4800
58.57	7497/128	K713_0590 ME30	2900	2600	4200	12	96	≤38	10.0	5.0	2.0	126	2169	2600	4800
58.57	7497/128	K713_0590 ME40	2900	2600	4200	34	101	≤48	10.0	5.0	2.0	126	2400	2600	4800
58.57	7497/128	K713_0590 ME50	2500	2500	4000	63	108	≤60	10.0	5.0	2.0	126	2400	2600	4800
64.85	33201/512	K713_0650 ME30	2900	2600	4200	12	96	≤38	10.0	5.0	2.0	126	2400	2600	4800
64.85	33201/512	K713_0650 ME40	2900	2600	4200	34	101	≤48	10.0	5.0	2.0	126	2400	2600	4800
64.85	33201/512	K713_0650 ME50	2500	2500	4000	63	108	≤60	10.0	5.0	2.0	126	2400	2600	4800
71.20	4557/64	K713_0710 ME30	2900	2600	4200	11	96	≤38	10.0	5.0	2.0	126	2173	2276	2846
78.83	20181/256	K713_0790 ME30	2900	2600	4200	11	96	≤38	10.0	5.0	2.0	126	2400	2520	3150
89.00	22785/256	K713_0890 ME30	2900	2600	4200	11	96	≤38	10.0	5.0	2.0	126	1671	2006	3005
98.54	100905/1024	K713_0990 ME30	2900	2600	4200	11	96	≤38	10.0	5.0	2.0	126	1850	2221	3327
K714 ($M_{2acc,max}$ = 2600 Nm)															
89.06	227997/2560	K714_0890 ME30	2900	2600	4200	11	104	≤38	10.0	6.0	3.0	126	2400	2600	3451
98.60	1009701/10240	K714_0990 ME30	2900	2600	4200	11	104	≤38	10.0	6.0	3.0	126	2400	2600	3821
114.7	117453/1024	K714_1150 ME30	2900	2600	4200	10	104	≤38	10.0	6.0	3.0	126	2400	2600	4086
127.0	520149/4096	K714_1270 ME30	2900	2600	4200	10	104	≤38	10.0	6.0	3.0	126	2400	2600	4524
137.0	5481/40	K714_1370 ME20	2900	2600	4200	3.1	102	≤24	10.0	6.0	3.0	126	1626	1626	2032
138.8	8883/64	K714_1390 ME30	2900	2600	4200	10	104	≤38	10.0	6.0	3.0	126	2400	2600	4558
151.7	24273/160	K714_1520 ME20	2900	2600	4200	3.1	102	≤24	10.0	6.0	3.0	126	1800	1800	2250
153.7	39339/256	K714_1540 ME30	2900	2600	4200	10	104	≤38	10.0	6.0	3.0	126	2400	2600	4800
174.2	72471/416	K714_1740 ME20	2900	2600	4200	3.0	102	≤24	10.0	6.0	3.0	126	1751	1751	2189
176.5	587265/3328	K714_1760 ME30	2900	2600	4200	10	104	≤38	10.0	6.0	3.0	126	2400	2600	4800
192.9	320943/1664	K714_1930 ME20	2900	2600	4200	3.0	102	≤24	10.0	6.0	3.0	126	1938	1938	2423
195.4	2600745/13312	K714_1950 ME30	2900	2600	4200	10	104	≤38	10.0	6.0	3.0	126	2400	2600	4800
226.5	72471/320	K714_2260 ME20	2900	2600	4200	2.9	102	≤24	10.0	6.0	3.0	126	2044	2044	2555
229.4	117453/512	K714_2290 ME30	2900	2600	4200	10	104	≤38	10.0	6.0	3.0	126	2400	2600	4800
250.7	320943/1280	K714_2510 ME20	2900	2600	4200	2.9	102	≤24	10.0	6.0	3.0	126	2263	2263	2828
254.0	520149/2048	K714_2540 ME30	2900	2600	4200	10	104	≤38	10.0	6.0	3.0	126	2400	2600	4800
275.3	44051/160	K714_2750 ME20	2900	2600	4200	2.8	102	≤24	10.0	6.0	3.0	126	2173	2276	2846
304.8	195083/640	K714_3050 ME20	2900	2600	4200	2.8	102	≤24	10.0	6.0	3.0	126	2400	2520	3150

i	i_{exakt}	Type	n_{1MAXDB} EL1,2 [rpm]	n_{1MAXDB} EL3,4,5,6 [rpm]	n_{1MAXZB} [rpm]	J_1 [kgcm²]	m [kg]	d_{MW} [mm]	$\Delta\varphi_2$ [arcmin]	$\Delta\varphi_{2redII}$ [arcmin]	$\Delta\varphi_{2redI}$ [arcmin]	C_2 [Nm/arcmin]	M_{2N} [Nm]	M_{2acc} [Nm]	M_{2NOT} [Nm]
K714 ($M_{2acc,max}$ = 2600 Nm)															
344.1	44051/128	K714_3440 ME20	2900	2600	4200	2.8	102	≤24	10.0	6.0	3.0	126	1671	2006	3005
381.0	195083/512	K714_3810 ME20	2900	2600	4200	2.8	102	≤24	10.0	6.0	3.0	126	1850	2221	3327
K813 ($M_{2acc,max}$ = 4650 Nm)															
7.445	3127/420	K813_0074 ME40	1600	1500	2600	174	154	≤48	10.0	5.0	2.0	187	2135	2135	2669
7.445	3127/420	K813_0074 ME50	1600	1500	2600	202	162	≤60	10.0	5.0	2.0	191	2135	2135	2669
8.243	96937/11760	K813_0082 ME40	1600	1500	2600	161	154	≤48	10.0	5.0	2.0	189	2364	2364	2955
8.243	96937/11760	K813_0082 ME50	1600	1500	2600	189	162	≤60	10.0	5.0	2.0	192	2364	2364	2955
9.284	11977/1290	K813_0093 ME40	1600	1500	2600	133	154	≤48	10.0	5.0	2.0	191	2662	2662	3328
9.284	11977/1290	K813_0093 ME50	1600	1500	2600	161	162	≤60	10.0	5.0	2.0	193	2662	2662	3328
10.28	53041/5160	K813_0105 ME40	1600	1500	2600	125	154	≤48	10.0	5.0	2.0	192	2907	2948	3684
10.28	53041/5160	K813_0105 ME50	1600	1500	2600	152	162	≤60	10.0	5.0	2.0	193	2907	2948	3684
14.84	9499/640	K813_0150 ME40	1900	1800	3000	82	154	≤48	10.0	5.0	2.0	194	3286	4255	5318
14.84	9499/640	K813_0150 ME50	1900	1800	3000	110	162	≤60	10.0	5.0	2.0	195	3286	4255	5318
16.43	42067/2560	K813_0165 ME40	1900	1800	3000	79	154	≤48	10.0	5.0	2.0	194	3399	4650	5888
16.43	42067/2560	K813_0165 ME50	1900	1800	3000	106	162	≤60	10.0	5.0	2.0	195	3399	4650	5888
17.33	30149/1740	K813_0175 ME30	2300	2100	3500	49	149	≤38	10.0	5.0	2.0	194	2025	2649	3311
17.33	30149/1740	K813_0175 ME40	2300	2100	3500	72	154	≤48	10.0	5.0	2.0	195	3460	4650	6209
17.33	30149/1740	K813_0175 ME50	2300	2100	3500	100	162	≤60	10.0	5.0	2.0	195	3460	4650	6209
19.18	133517/6960	K813_0190 ME30	2300	2100	3500	47	149	≤38	10.0	5.0	2.0	195	2242	2933	3666
19.18	133517/6960	K813_0190 ME40	2300	2100	3500	70	154	≤48	10.0	5.0	2.0	195	3579	4650	6874
19.18	133517/6960	K813_0190 ME50	2300	2100	3500	98	162	≤60	10.0	5.0	2.0	195	3579	4650	6874
23.04	31801/1380	K813_0230 ME30	2300	2100	3500	36	149	≤38	10.0	5.0	2.0	195	2153	3133	3917
23.04	31801/1380	K813_0230 ME40	2300	2100	3500	58	154	≤48	10.0	5.0	2.0	195	3805	4650	8259
23.04	31801/1380	K813_0230 ME50	2300	2100	3500	86	162	≤60	10.0	5.0	2.0	196	3805	4650	8259
25.51	140833/5520	K813_0260 ME30	2300	2100	3500	35	149	≤38	10.0	5.0	2.0	195	2383	3469	4337
25.51	140833/5520	K813_0260 ME40	2300	2100	3500	57	154	≤48	10.0	5.0	2.0	196	3936	4650	8400
25.51	140833/5520	K813_0260 ME50	2300	2100	3500	85	162	≤60	10.0	5.0	2.0	196	3936	4650	8400
29.25	7021/240	K813_0290 ME30	2800	2500	4000	28	149	≤38	10.0	5.0	2.0	196	2341	3748	4685
29.25	7021/240	K813_0290 ME40	2800	2500	4000	50	154	≤48	10.0	5.0	2.0	196	4120	4650	8400
29.25	7021/240	K813_0290 ME50	2500	2500	4000	78	162	≤60	10.0	5.0	2.0	196	4120	4650	8400
32.39	31093/960	K813_0320 ME30	2800	2500	4000	27	149	≤38	10.0	5.0	2.0	196	2592	4150	5188
32.39	31093/960	K813_0320 ME40	2800	2500	4000	49	154	≤48	10.0	5.0	2.0	196	4200	4650	8400
32.39	31093/960	K813_0320 ME50	2500	2500	4000	77	162	≤60	10.0	5.0	2.0	196	4200	4650	8400
36.14	2891/80	K813_0360 ME30	2800	2500	4000	22	149	≤38	10.0	5.0	2.0	196	2370	3885	4856
36.14	2891/80	K813_0360 ME40	2800	2500	4000	45	154	≤48	10.0	5.0	2.0	196	4200	4650	8400
36.14	2891/80	K813_0360 ME50	2500	2500	4000	73	162	≤60	10.0	5.0	2.0	196	4200	4650	8400
40.01	12803/320	K813_0400 ME30	2800	2500	4000	22	149	≤38	10.0	5.0	2.0	196	2624	4302	5377
40.01	12803/320	K813_0400 ME40	2800	2500	4000	44	154	≤48	10.0	5.0	2.0	196	4200	4650	8400
40.01	12803/320	K813_0400 ME50	2500	2500	4000	72	162	≤60	10.0	5.0	2.0	196	4200	4650	8400
44.25	177/4	K813_0440 ME30	2800	2500	4000	19	149	≤38	10.0	5.0	2.0	196	2494	4366	5458
44.25	177/4	K813_0440 ME40	2800	2500	4000	41	154	≤48	10.0	5.0	2.0	196	4200	4366	5458
44.25	177/4	K813_0440 ME50	2500	2500	4000	70	162	≤60	10.0	5.0	2.0	196	4200	4366	5458
48.99	5487/112	K813_0490 ME30	2800	2500	4000	18	149	≤38	10.0	5.0	2.0	196	2761	4650	6043
48.99	5487/112	K813_0490 ME40	2800	2500	4000	40	154	≤48	10.0	5.0	2.0	196	4200	4650	6043
48.99	5487/112	K813_0490 ME50	2500	2500	4000	69	162	≤60	10.0	5.0	2.0	196	4200	4650	6043
59.08	42539/720	K813_0590 ME30	2800	2500	4000	15	149	≤38	10.0	5.0	2.0	196	2560	4650	6388
59.08	42539/720	K813_0590 ME40	2800	2500	4000	37	154	≤48	10.0	5.0	2.0	196	4200	4650	6388
59.08	42539/720	K813_0590 ME50	2500	2500	4000	66	162	≤60	10.0	5.0	2.0	196	4200	4650	6388
65.41	188387/2880	K813_0650 ME30	2800	2500	4000	15	149	≤38	10.0	5.0	2.0	196	2835	4650	7073
65.41	188387/2880	K813_0650 ME40	2800	2500	4000	37	154	≤48	10.0	5.0	2.0	196	4200	4650	7073
65.41	188387/2880	K813_0650 ME50	2500	2500	4000	66	162	≤60	10.0	5.0	2.0	196	4200	4650	7073
71.70	10325/144	K813_0720 ME30	2800	2500	4000	13	149	≤38	10.0	5.0	2.0	196	2638	4327	7007
71.70	10325/144	K813_0720 ME40	2800	2500	4000	35	154	≤48	10.0	5.0	2.0	196	3606	4327	7007
71.70	10325/144	K813_0720 ME50	2500	2500	4000	64	162	≤60	10.0	5.0	2.0	196	3606	4327	7007
79.38	45725/576	K813_0790 ME30	2800	2500	4000	13	149	≤38	10.0	5.0	2.0	196	2920	4650	7758
79.38	45725/576	K813_0790 ME40	2800	2500	4000	35	154	≤48	10.0	5.0	2.0	196	3993	4650	7758
79.38	45725/576	K813_0790 ME50	2500	2500	4000	64	162	≤60	10.0	5.0	2.0	196	3993	4650	7758
87.76	7021/80	K813_0880 ME30	2800	2500	4000	12	149	≤38	10.0	5.0	2.0	196	2637	2637	3297
97.17	31093/320	K813_0970 ME30	2800	2500	4000	12	149	≤38	10.0	5.0	2.0	196	2920	2920	3650
K814 ($M_{2acc,max}$ = 4650 Nm)															
66.83	38763/580	K814_0670 ME40	2800	2500	4000	36	167	≤48	10.0	6.0	3.0	196	4200	4650	6209
73.99	1201653/16240	K814_0740 ME40	2800	2500	4000	36	167	≤48	10.0	6.0	3.0	196	4200	4650	6874
88.89	40887/460	K814_0890 ME40	2800	2500	4000	35	167	≤48	10.0	6.0	3.0	196	4200	4650	8259
98.41	181071/1840	K814_0980 ME40	2800	2500	4000	35	167	≤48	10.0	6.0	3.0	196	4200	4650	8400

i	i_{exakt}	Type	n_{1MAXDB} EL1,2 [rpm]	n_{1MAXDB} EL3,4,5,6 [rpm]	n_{1MAXZB} [rpm]	J_1 [kgcm²]	m [kg]	d_{MW} [mm]	$\Delta\varphi_2$ [arcmin]	$\Delta\varphi_{2redII}$ [arcmin]	$\Delta\varphi_{2redI}$ [arcmin]	C_2 [Nm/arcmin]	M_{2N} [Nm]	M_{2acc} [Nm]	M_{2NOT} [Nm]
K814 ($M_{2acc,max}$ = 4650 Nm)															
112.8	9027/80	K814_1130 ME40	2800	2500	4000	34	167	≤48	10.0	6.0	3.0	196	4200	4650	8400
114.6	329987/2880	K814_1150 ME30	2800	2500	4000	11	162	≤38	10.0	6.0	3.0	196	3495	3552	4440
124.9	279837/2240	K814_1250 ME40	2800	2500	4000	34	167	≤48	10.0	6.0	3.0	196	4200	4650	8400
126.9	1461371/11520	K814_1270 ME30	2800	2500	4000	11	162	≤38	10.0	6.0	3.0	196	3869	3932	4916
139.4	11151/80	K814_1390 ME40	2800	2500	4000	34	167	≤48	10.0	6.0	3.0	196	4200	4650	8400
141.5	135877/960	K814_1420 ME30	2800	2500	4000	11	162	≤38	10.0	6.0	3.0	196	3832	3885	4856
154.3	49383/320	K814_1540 ME40	2800	2500	4000	34	167	≤48	10.0	6.0	3.0	196	4200	4650	8400
156.7	601741/3840	K814_1570 ME30	2800	2500	4000	11	162	≤38	10.0	6.0	3.0	196	4200	4302	5377
170.7	4779/28	K814_1710 ME40	2800	2500	4000	34	167	≤48	10.0	6.0	3.0	196	4200	4366	5458
173.3	2773/16	K814_1730 ME30	2800	2500	4000	10	162	≤38	10.0	6.0	3.0	196	4056	4366	5458
189.0	148149/784	K814_1890 ME40	2800	2500	4000	34	167	≤48	10.0	6.0	3.0	196	4200	4650	6043
191.9	85963/448	K814_1920 ME30	2800	2500	4000	10	162	≤38	10.0	6.0	3.0	196	4200	4650	6043
227.9	18231/80	K814_2280 ME40	2800	2500	4000	33	167	≤48	10.0	6.0	3.0	196	4200	4650	6388
231.4	1999333/8640	K814_2310 ME30	2800	2500	4000	10	162	≤38	10.0	6.0	3.0	196	4200	4650	6388
252.3	565161/2240	K814_2520 ME40	2800	2500	4000	33	167	≤48	10.0	6.0	3.0	196	4200	4650	7073
256.2	8854189/34560	K814_2560 ME30	2800	2500	4000	10	162	≤38	10.0	6.0	3.0	196	4200	4650	7073
276.6	4425/16	K814_2770 ME40	2800	2500	4000	33	167	≤48	10.0	6.0	3.0	196	3606	4327	7007
280.8	485275/1728	K814_2810 ME30	2800	2500	4000	10	162	≤38	10.0	6.0	3.0	196	3606	4327	7007
306.2	137175/448	K814_3060 ME40	2800	2500	4000	33	167	≤48	10.0	6.0	3.0	196	3993	4650	7758
310.9	2149075/6912	K814_3110 ME30	2800	2500	4000	10	162	≤38	10.0	6.0	3.0	196	3993	4650	7758
K913 ($M_{2acc,max}$ = 7700 Nm)															
12.53	73749/5888	K913_0125 ME40	1800	1800	2800	190	269	≤48	10.0	5.0	–	367	3592	3592	4490
12.53	73749/5888	K913_0125 ME50	1800	1800	2800	218	276	≤60	10.0	5.0	–	372	3592	3592	4490
19.06	305/16	K913_0190 ME40	2200	2100	3300	117	269	≤48	10.0	5.0	–	374	4955	5466	6833
19.06	305/16	K913_0190 ME50	2200	2100	3300	145	276	≤60	10.0	5.0	–	376	5466	5466	6833
23.94	88877/3712	K913_0240 ME40	2200	2100	3300	93	269	≤48	10.0	5.0	–	376	5252	6864	8580
23.94	88877/3712	K913_0240 ME50	2200	2100	3300	121	276	≤60	10.0	5.0	–	377	6864	6864	8580
32.12	47275/1472	K913_0320 ME40	2600	2500	3800	71	269	≤48	10.0	5.0	–	377	5621	7700	11511
32.12	47275/1472	K913_0320 ME50	2500	2500	3800	99	276	≤60	10.0	5.0	–	378	7000	7700	11511
38.04	194773/5120	K913_0380 ME40	2600	2500	3800	62	269	≤48	10.0	5.0	–	378	5807	7700	12504
38.04	194773/5120	K913_0380 ME50	2500	2500	3800	90	276	≤60	10.0	5.0	–	378	7000	7700	12504
48.94	100223/2048	K913_0490 ME40	2600	2500	3800	52	269	≤48	10.0	5.0	–	378	5999	7700	13787
48.94	100223/2048	K913_0490 ME50	2500	2500	3800	80	276	≤60	10.0	5.0	–	379	7000	7700	13787
63.07	209901/3328	K913_0630 ME40	2600	2500	3800	45	269	≤48	10.0	5.0	–	379	6229	7700	14000
63.07	209901/3328	K913_0630 ME50	2500	2500	3800	73	276	≤60	10.0	5.0	–	379	7000	7700	14000
75.00	62403/832	K913_0750 ME40	2600	2500	3800	41	269	≤48	10.0	5.0	–	379	6422	6820	8525
75.00	62403/832	K913_0750 ME50	2500	2500	3800	70	276	≤60	10.0	5.0	–	379	6820	6820	8525
95.41	293105/3072	K913_0950 ME40	2600	2500	3800	38	269	≤48	10.0	5.0	–	379	5375	6450	9212
95.41	293105/3072	K913_0950 ME50	2500	2500	3800	67	276	≤60	10.0	5.0	–	379	5375	6450	9212
K914 ($M_{2acc,max}$ = 7700 Nm)															
92.35	2399679/25984	K914_0920 ME40	2600	2500	3800	37	281	≤48	10.0	5.0	–	379	6864	6864	8580
93.78	4177219/44544	K914_0940 ME30	2600	2500	3800	14	276	≤38	10.0	5.0	–	379	2860	2907	3634
123.9	1276425/10304	K914_1240 ME40	2600	2500	3800	36	281	≤48	10.0	5.0	–	379	7000	7700	11511
125.8	2221925/17664	K914_1260 ME30	2600	2500	3800	12	276	≤38	10.0	5.0	–	379	3837	3899	4874
146.7	5258871/35840	K914_1470 ME40	2600	2500	3800	35	281	≤48	10.0	5.0	–	379	7000	7700	12504
149.0	9154331/61440	K914_1490 ME30	2600	2500	3800	12	276	≤38	10.0	5.0	–	379	4545	4600	5750
188.8	2706021/14336	K914_1890 ME40	2600	2500	3800	34	281	≤48	10.0	5.0	–	379	7000	7700	13787
191.7	4710481/24576	K914_1920 ME30	2600	2500	3800	11	276	≤38	10.0	5.0	–	379	5073	5073	6341
243.3	5667327/23296	K914_2430 ME40	2600	2500	3800	34	281	≤48	10.0	5.0	–	379	7000	7700	14000
247.0	3288449/13312	K914_2470 ME30	2600	2500	3800	11	276	≤38	10.0	5.0	–	379	5474	5732	7164
293.8	977647/3328	K914_2940 ME30	2600	2500	3800	10	276	≤38	10.0	5.0	–	379	5704	6820	8525
373.7	13775935/36864	K914_3740 ME30	2600	2500	3800	10	276	≤38	10.0	5.0	–	379	5375	6450	9212
K1013 ($M_{2acc,max}$ = 13200 Nm)															
38.60	8029/208	K1013_0390 ME50	2500	2300	3500	126	469	≤60	10.0	5.0	–	722	9066	10621	13276
61.55	12803/208	K1013_0620 ME50	2500	2300	3500	91	469	≤60	10.0	5.0	–	724	9696	12750	15938
75.28	101773/1352	K1013_0750 ME50	2500	2300	3500	82	469	≤60	10.0	5.0	–	724	9807	13200	19564
94.33	235445/2496	K1013_0940 ME50	2500	2300	3500	75	469	≤60	10.0	5.0	–	724	7330	7330	9163
K1014 ($M_{2acc,max}$ = 13200 Nm)															
93.34	252399/2704	K1014_0930 ME50	2500	2300	3500	72	498	≤60	10.0	5.0	–	724	10801	12961	18191
123.7	7359555/59488	K1014_1240 ME50	2500	2300	3500	69	498	≤60	10.0	5.0	–	724	12000	13200	24000
148.9	30969/208	K1014_1490 ME40	2500	2300	3500	38	490	≤48	10.0	5.0	–	724	9417	10621	13276
151.4	409479/2704	K1014_1510 ME50	2500	2300	3500	67	498	≤60	10.0	5.0	–	724	12000	13200	24000
190.4	514941/2704	K1014_1900 ME50	2500	2300	3500	66	498	≤60	10.0	5.0	–	725	12000	13200	24000

i	i_{exakt}	Type	n_{1MAXDB} EL1,2 [rpm]	n_{1MAXDB} EL3,4,5,6 [rpm]	n_{1MAXZB} [rpm]	J_1 [kgcm²]	m [kg]	d_{MW} [mm]	$\Delta\varphi_2$ [arcmin]	$\Delta\varphi_{2redII}$ [arcmin]	$\Delta\varphi_{2redI}$ [arcmin]	C_2 [Nm/ arcmin]	M_{2N} [Nm]	M_{2acc} [Nm]	M_{2NOT} [Nm]
K1014 ($M_{2acc,max}$ = 13200 Nm)															
237.4	49383/208	K1014_2370 ME40	2500	2300	3500	35	490	≤48	10.0	5.0	–	725	10425	12750	15938
290.4	392553/1352	K1014_2900 ME40	2500	2300	3500	35	490	≤48	10.0	5.0	–	725	10727	13200	19564

16.3 Dimensional drawings

In this chapter, you can find the dimensions of the gear units as well as example dimensions of the mountable motor adapters.

Dimensions can exceed the specifications of ISO 2768-mK due to casting tolerances or accumulation of individual tolerances.

We reserve the right to make dimensional changes due to ongoing technical development.

You can download 3D models of our standard drives at http://configurator.stoeber.de.

Tolerances

Axis height in accordance with DIN 747	Tolerance
Up to 50 mm	-0.4 mm
Up to 250 mm	-0.5 mm
Up to 630 mm	-0.6 mm

Solid shaft	Tolerance
Shaft ∅ fit ≤ 50 mm	DIN 748-1, ISO k6
Shaft ∅ fit > 50 mm	DIN 748-1, ISO m6
Feather keys	DIN 6885-1, high form A

Hollow shaft	Tolerance
Hollow shaft hole fit	ISO H7
Feather keys	DIN 6885-1, high form K1 ∅30: DIN 6885-3, low form

Flange	Pilot tolerance
Up to 300 mm	ISO j6
Starting at 350 mm	ISO h6

Centering holes in solid shafts in accordance with DIN 332-2, DR shape

Thread size	M4	M5	M6	M8	M10	M12	M16	M20	M24
Thread depth [mm]	10	12.5	16	19	22	28	36	42	50

16.3.1 A shaft design (hollow shaft), G housing design (pitch circle diameter)

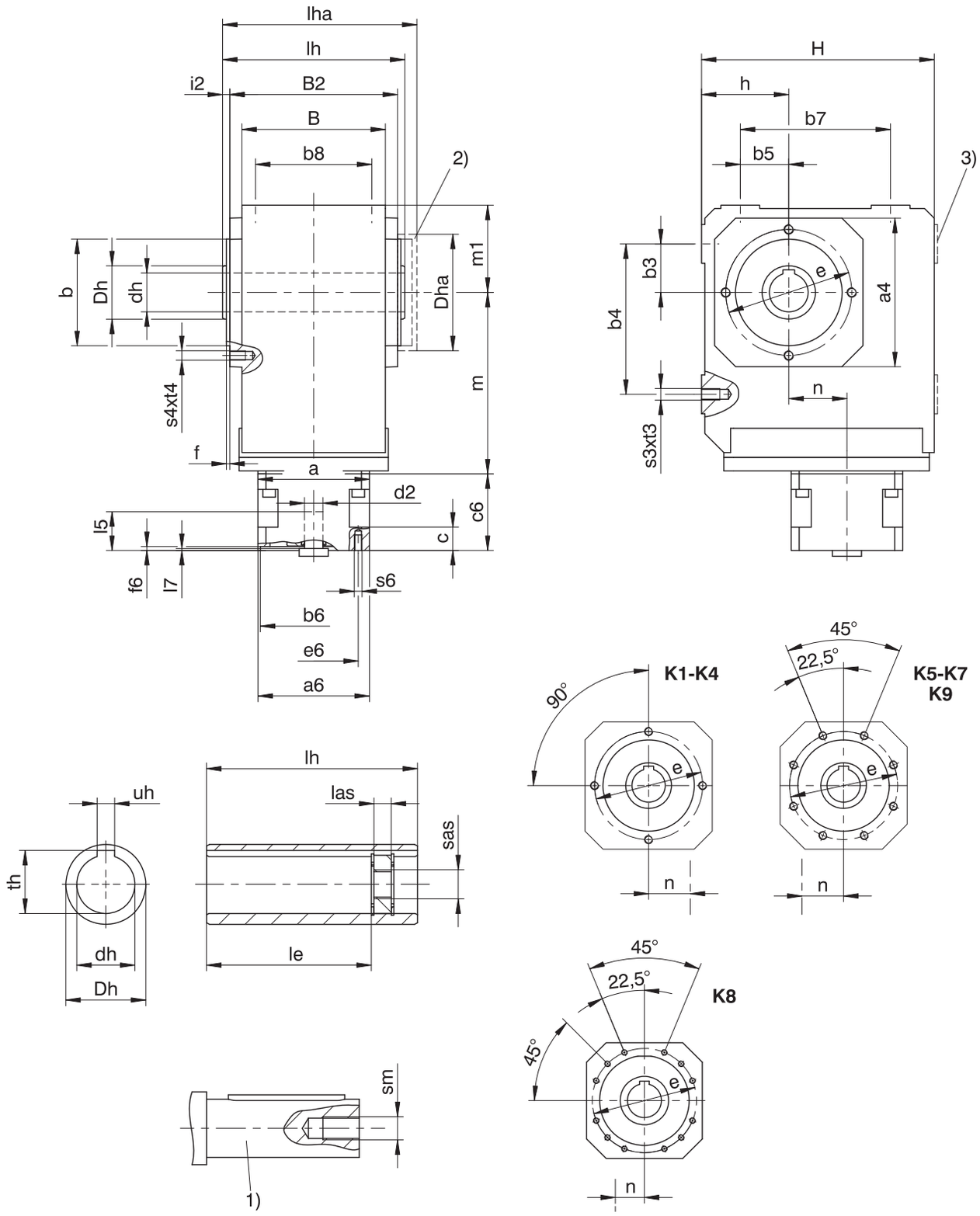

1) The length of the machine shaft must be at least 2.2 x ∅dh and the length of the feather key must be at least 2 x ∅dh.

2) Cover (optional)

3) Only for K1 (other sizes on request)

Dimensions of gear units

Type	□a4	Øb	b3	b4	b5	b7	b8	B	B2	Ødh	ØDh	Dha	Øe	f	h	H	i2	le	lh	las	lha	m1	s3	s4	sm	sas	t3	t4	th	uh
K1	105	75_{j6}	30	90	30	90	70	90	106	20^{H7}	40	□105	90	3.0	60	160	7.0	98.0	120	12	127.0	60	M8	M8	M6	M8	13	13	22.8	6^{JS9}
K1	105	75_{j6}	30	90	30	90	70	90	106	25^{H7}	40	□105	90	3.0	60	160	7.0	98.0	120	12	127.0	60	M8	M8	M10	M12	13	13	28.3	8^{JS9}
K1	105	75_{j6}	30	90	30	90	70	90	106	30^{H7}	40	□105	90	3.0	60	160	7.0	93.5	120	12	127.0	60	M8	M8	M10	M12	13	13	32.0	8^{JS9}
K2	116	82_{j6}	35	115	35	115	90	115	134	30^{H7}	45	□116	100	3.0	65	190	7.0	121.5	148	12	156.0	65	M10	M8	M10	M12	16	13	33.3	8^{JS9}
K3	132	95_{j6}	40	130	40	130	105	130	146	35^{H7}	50	□132	115	3.0	75	213	7.0	125.0	160	12	168.0	75	M10	M8	M12	M16	16	13	38.3	10^{JS9}
K4	152	110_{j6}	50	155	50	155	120	148	173	40^{H7}	55	□152	130	3.5	90	240	7.5	157.0	188	12	197.5	90	M12	M10	M16	M20	19	16	43.3	12^{JS9}
K5	145	110_{j6}	40	140	100	140	125	160	185	50^{H7}	65	□145	130	3.5	160	260	7.5	164.0	200	12	209.5	100	M16	M10	M16	M20	26	16	53.8	14^{JS9}
K6	180	140_{j6}	50	160	110	160	130	168	200	50^{H7}	70	∅183	165	3.5	190	310	7.5	179.0	215	12	224.5	120	M16	M10	M16	M20	26	16	53.8	14^{JS9}
K7	195	155_{j6}	55	180	125	180	145	190	226	60^{H7}	85	∅205	185	3.5	212	342	8.0	214.0	242	12	252.0	125	M20	M12	M20	M24	33	19	64.4	18^{JS9}
K8	226	185_{j6}	75	240	165	240	185	235	282	70^{H7}	100	∅184	215	4.0	265	410	9.0	263.0	300	20	311.0	145	M24	M12	M20	M24	38	19	74.9	20^{JS9}
K9	280	230_{j6}	95	280	185	280	225	285	330	90^{H7}	120	∅230	265	5.0	315	495	10.0	302.0	350	26	361.0	180	M30	M16	M24	M30	48	26	95.4	25^{JS9}

Type	ME10			ME20			ME30			ME40			ME50		
	a	m	n	a	m	n	a	m	n	a	m	n	a	m	n
K102	□98	124	36.0	□115	128	36.0	–	–	–	–	–	–	–	–	–
K202	□98	143	46.0	□115	147	46.0	□145	149	46.0	–	–	–	–	–	–
K203	∅140	180	46.0	–	–	–	–	–	–	–	–	–	–	–	–
K302	∅140	163	52.5	□115	167	52.5	□145	169	52.5	–	–	–	–	–	–
K303	∅140	200	52.5	∅160	210	16.0	–	–	–	–	–	–	–	–	–
K402	–	–	–	∅160	187	60.0	□145	189	60.0	□190	192	60.0	–	–	–
K403	∅140	220	60.0	∅160	230	23.0	–	–	–	–	–	–	–	–	–
K513	–	–	–	∅160	172	15.0	□145	174	15.0	□190	177	15.0	–	–	–
K514	–	–	–	∅160	215	15.0	–	–	–	–	–	–	–	–	–
K613	–	–	–	∅160	191	18.0	∅200	193	18.0	□190	196	18.0	∅300	210	18.0
K614	–	–	–	∅160	234	18.0	–	–	–	–	–	–	–	–	–
K713	–	–	–	–	–	–	∅200	221	20.0	□190	224	20.0	∅300	237	20.0
K714	–	–	–	∅160	263	20.0	∅200	283	20.0	–	–	–	–	–	–
K813	–	–	–	–	–	–	∅200	247	24.0	∅250	249	24.0	∅300	262	24.0
K814	–	–	–	–	–	–	∅200	308	24.0	∅250	320	5.0	–	–	–
K913	–	–	–	–	–	–	–	–	–	∅250	294	25.0	∅300	307	25.0
K914	–	–	–	–	–	–	∅200	353	25.0	∅250	365	25.0	–	–	–

Example dimensions for the motor connection

Type	Øb6	Øe6	Ød2max	l5	□a6	c	c6	f6	l7	s6
K_ME10	95^{H7}	115	19	41	100	21	61.0	4.0	3.0	M8
K_ME20	110^{H7}	130	32	53	120	24	74.0	4.0	3.5	M8
K_ME30	130^{H7}	165	38	62	150	26	86.0	5.5	4.5	M10
K_ME40	180^{H7}	215	48	82	204	35	123.0	5.5	5.5	M12
K_ME50	180^{H7}	215	60	86	230	43	124.5	6.0	5.0	M12

In the table above, you will find example dimensions for the motor connection for the ME motor adapter. **Note that when dimension c is lengthened (depending on the motor used), dimensions c6, l5 and lg are also lengthened accordingly.**

You will find additional motor connection dimensions for the ME motor adapter in our STOBER Configurator at http://configurator.stoeber.de. Here, you can directly download a 3D model of your drive.

16.3.2 A shaft design (hollow shaft), NG housing design (foot + pitch circle diameter)

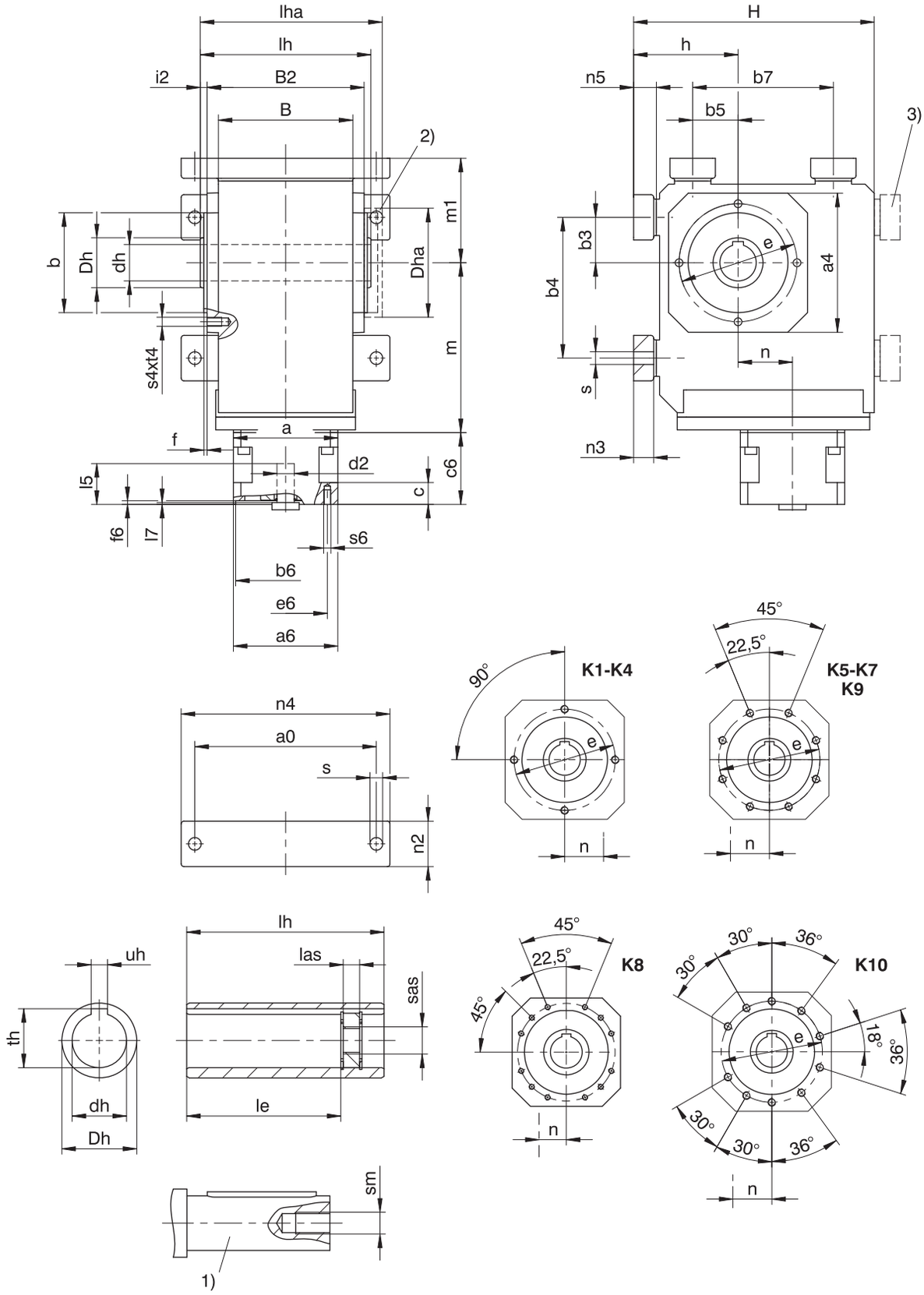

1) The length of the machine shaft must be at least 2.2 x ∅dh and the length of the feather key must be at least 2 x ∅dh.

2) Cover (optional)

3) Only for K1 (other sizes on request)

Dimensions of gear units

Type	a0	□a4	Øb	b3	b4	b5	b7	B	B2	Ødh	ØDh	Dha	Øe	f	h	H	i2	le	lh	las	lha	m1	n2	n3	n4	n5	Øs	s4	sm	sas	t4	th	uh
K1	115	105	75_{j6}	30	90	30	90	90	106	20^{H7}	40	□105	90	3.0	75	175	7.0	98.0	120	12	127.0	75	30	13	140	15	9.0	M8	M6	M8	13	22.8	6^{JS9}
K1	115	105	75_{j6}	30	90	30	90	90	106	25^{H7}	40	□105	90	3.0	75	175	7.0	98.0	120	12	127.0	75	30	13	140	15	9.0	M8	M10	M12	13	28.3	8^{JS9}
K1	115	105	75_{j6}	30	90	30	90	90	106	30^{H7}	40	□105	90	3.0	75	175	7.0	93.5	120	12	127.0	75	30	13	140	15	9.0	M8	M10	M12	13	32.0	8^{JS9}
K2	155	116	82_{j6}	35	115	35	115	115	134	30^{H7}	45	□116	100	3.0	88	213	7.0	121.5	148	12	156.0	88	40	20	185	23	11.0	M8	M10	M12	13	33.3	8^{JS9}
K3	170	132	95_{j6}	40	130	40	130	130	146	35^{H7}	50	□132	115	3.0	98	236	7.0	125.0	160	12	168.0	98	45	20	200	23	11.0	M8	M12	M16	13	38.3	10^{JS9}
K4	200	152	110_{j6}	50	155	50	155	148	173	40^{H7}	55	□152	130	3.5	115	265	7.5	157.0	188	12	197.5	115	50	22	230	25	14.0	M10	M16	M20	16	43.3	12^{JS9}
K5	200	145	110_{j6}	40	140	100	140	160	185	50^{H7}	65	□145	130	3.5	190	290	7.5	164.0	200	12	209.5	130	60	27	240	30	18.0	M10	M16	M20	16	53.8	14^{JS9}
K6	210	180	140_{j6}	50	160	110	160	168	200	50^{H7}	70	∅183	165	3.5	220	340	7.5	179.0	215	12	224.5	150	65	27	250	30	18.5	M10	M16	M20	16	53.8	14^{JS9}
K7	241	195	155_{j6}	55	180	125	180	190	226	60^{H7}	85	∅205	185	3.5	250	380	8.0	214.0	242	12	252.0	163	70	35	290	38	23.0	M12	M20	M24	19	64.4	18^{JS9}
K8	300	226	185_{j6}	75	240	165	240	235	282	70^{H7}	100	∅184	215	4.0	310	455	9.0	263.0	300	20	311.0	190	85	41	360	45	27.0	M12	M20	M24	19	74.9	20^{JS9}
K9	360	280	230_{j6}	95	280	185	280	285	330	90^{H7}	120	∅230	265	5.0	365	545	10.0	302.0	350	26	361.0	230	95	46	430	50	31.0	M16	M24	M30	26	95.4	25^{JS9}
K10	330	340	250_{h6}	115	350	265	420	400	356	100^{H7}	130	∅200	300	20.0	420	636	27.0	361.0	410	26	441.0	270	120	–	400	45	39.0	M20	M24	M30	33	106.4	28^{JS9}

Type	ME10			ME20			ME30			ME40			ME50		
	a	m	n	a	m	n	a	m	n	a	m	n	a	m	n
K102	□98	124	36.0	□115	128	36.0	–	–	–	–	–	–	–	–	–
K202	□98	143	46.0	□115	147	46.0	□145	149	46.0	–	–	–	–	–	–
K203	∅140	180	46.0	–	–	–	–	–	–	–	–	–	–	–	–
K302	∅140	163	52.5	□115	167	52.5	□145	169	52.5	–	–	–	–	–	–
K303	∅140	200	52.5	∅160	210	16.0	–	–	–	–	–	–	–	–	–
K402	–	–	–	∅160	187	60.0	□145	189	60.0	□190	192	60.0	–	–	–
K403	∅140	220	60.0	∅160	230	23.0	–	–	–	–	–	–	–	–	–
K513	–	–	–	∅160	172	15.0	□145	174	15.0	□190	177	15.0	–	–	–
K514	–	–	–	∅160	215	15.0	–	–	–	–	–	–	–	–	–
K613	–	–	–	∅160	191	18.0	∅200	193	18.0	□190	196	18.0	∅300	210	18.0
K614	–	–	–	∅160	234	18.0	–	–	–	–	–	–	–	–	–
K713	–	–	–	–	–	–	∅200	221	20.0	□190	224	20.0	∅300	237	20.0
K714	–	–	–	∅160	263	20.0	∅200	283	20.0	–	–	–	–	–	–
K813	–	–	–	–	–	–	∅200	247	24.0	∅250	249	24.0	∅300	262	24.0
K814	–	–	–	–	–	–	∅200	308	24.0	∅250	320	5.0	–	–	–
K913	–	–	–	–	–	–	–	–	–	∅250	294	25.0	∅300	307	25.0
K914	–	–	–	–	–	–	∅200	353	25.0	∅250	365	25.0	–	–	–
K1013	–	–	–	–	–	–	–	–	–	–	–	–	∅300	392	28.0
K1014	–	–	–	–	–	–	–	–	–	∅250	450	28.0	∅300	475	28.0

Example dimensions for the motor connection

Type	Øb6	Øe6	Ød2max	l5	□a6	c	c6	f6	l7	s6
K_ME10	95^{H7}	115	19	41	100	21	61.0	4.0	3.0	M8
K_ME20	110^{H7}	130	32	53	120	24	74.0	4.0	3.5	M8
K_ME30	130^{H7}	165	38	62	150	26	86.0	5.5	4.5	M10
K_ME40	180^{H7}	215	48	82	204	35	123.0	5.5	5.5	M12
K_ME50	180^{H7}	215	60	86	230	43	124.5	6.0	5.0	M12

In the table above, you will find example dimensions for the motor connection for the ME motor adapter. **Note that when dimension c is lengthened (depending on the motor used), dimensions c6, l5 and lg are also lengthened accordingly.**

You will find additional motor connection dimensions for the ME motor adapter in our STOBER Configurator at http://configurator.stoeber.de. Here, you can directly download a 3D model of your drive.

16.3.3 A shaft design (hollow shaft), GD housing design (pitch circle diameter + torque arm bracket)

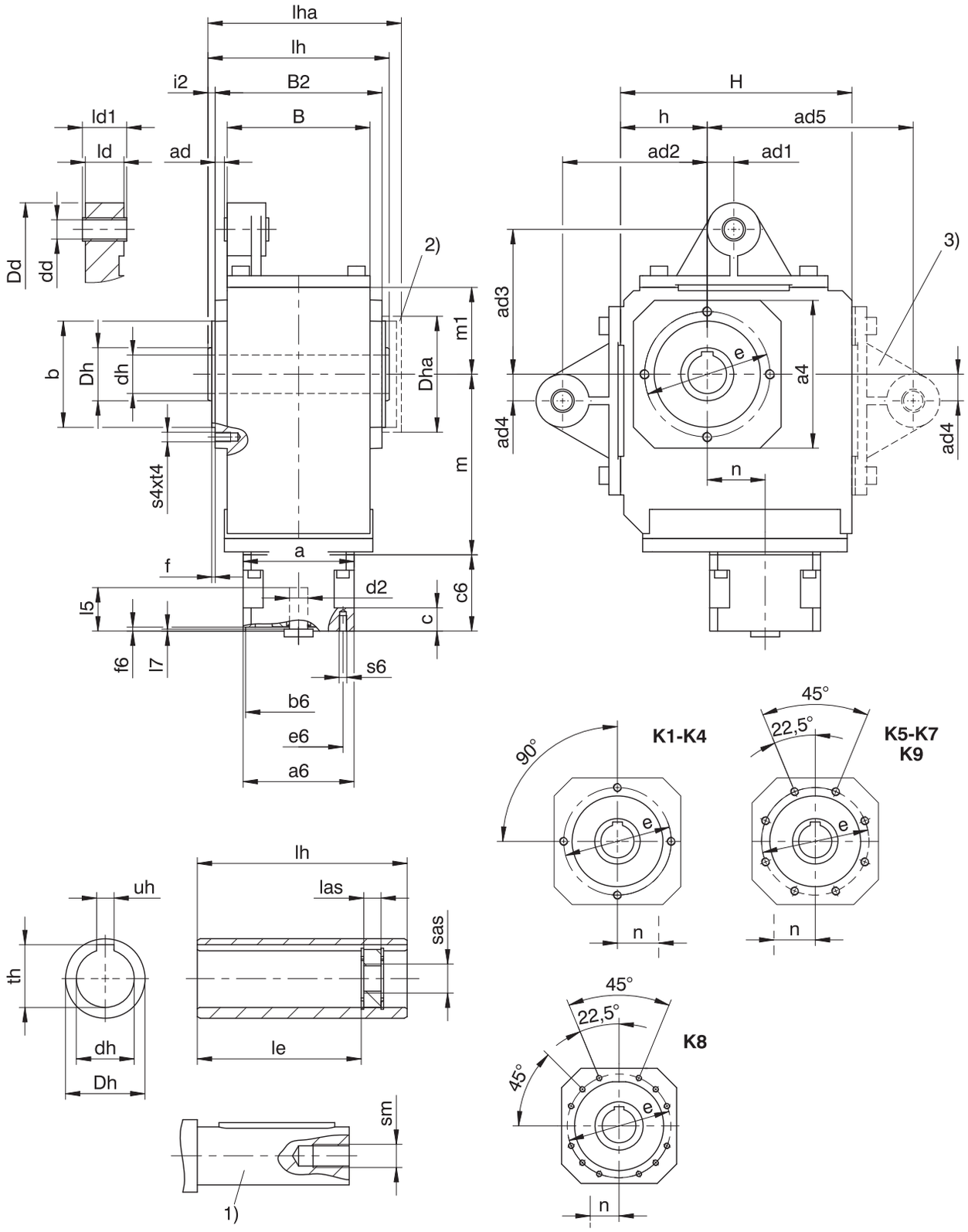

1) The length of the machine shaft must be at least 2.2 x ∅dh and the length of the feather key must be at least 2 x ∅dh.

2) Cover (optional)

3) Only for K1 (other sizes on request)

– If you brace the gear units without the torque arm brackets provided by the manufacturer for this purpose, the dimensions for ad2 and ad3 must meet the specified value.

Dimensions of gear units

Type	□a4	ad	ad1	ad2	ad3	ad4	ad5	Øb	B	B2	Ødd	Ødh	ØDd	ØDh	Dha	Øe	f
K1	105	6.0	15.0	90	90	15.0	130	75_{j6}	90	106	12^{H9}	20^{H7}	43	40	□105	90	3.0
K1	105	6.0	15.0	90	90	15.0	130	75_{j6}	90	106	12^{H9}	25^{H7}	43	40	□105	90	3.0
K1	105	6.0	15.0	90	90	15.0	130	75_{j6}	90	106	12^{H9}	30^{H7}	43	40	□105	90	3.0
K2	116	6.5	22.5	100	100	22.5	–	82_{j6}	115	134	16^{H9}	30^{H7}	45	45	□116	100	3.0
K3	132	5.0	25.0	120	120	25.0	–	95_{j6}	130	146	16^{H9}	35^{H7}	45	50	□132	115	3.0
K4	152	9.5	27.5	150	150	27.5	–	110_{j6}	148	173	20^{H9}	40^{H7}	55	55	□152	130	3.5
K5	145	9.5	30.0	250	190	30.0	–	110_{j6}	160	185	20^{H9}	50^{H7}	58	65	□145	130	3.5
K6	180	13.0	30.0	250	180	30.0	–	140_{j6}	168	200	20^{H9}	50^{H7}	58	70	∅183	165	3.5
K7	195	15.0	35.0	300	213	35.0	–	155_{j6}	190	226	20^{H9}	60^{H7}	68	85	∅205	185	3.5
K8	226	17.0	45.0	350	230	45.0	–	185_{j6}	235	282	24^{H9}	70^{H7}	72	100	∅184	215	4.0
K9	280	16.0	45.0	450	315	45.0	–	230_{j6}	285	330	24^{H9}	90^{H7}	75	120	∅230	265	5.0

Type	h	H	i2	ld	ld1	le	lh	las	lha	m1	s4	sm	sas	t4	th	uh
K1	60	160	7.0	24	28	98.0	120	12	127.0	60	M8	M6	M8	13	22.8	6^{JS9}
K1	60	160	7.0	24	28	98.0	120	12	127.0	60	M8	M10	M12	13	28.3	8^{JS9}
K1	60	160	7.0	24	28	93.5	120	12	127.0	60	M8	M10	M12	13	32.0	8^{JS9}
K2	65	190	7.0	32	38	121.5	148	12	156.0	65	M8	M10	M12	13	33.3	8^{JS9}
K3	75	213	7.0	32	38	125.0	160	12	168.0	75	M8	M12	M16	13	38.3	10^{JS9}
K4	90	240	7.5	40	46	157.0	188	12	197.5	90	M10	M16	M20	16	43.3	12^{JS9}
K5	160	260	7.5	40	46	164.0	200	12	209.5	100	M10	M16	M20	16	53.8	14^{JS9}
K6	190	310	7.5	40	46	179.0	215	12	224.5	120	M10	M16	M20	16	53.8	14^{JS9}
K7	212	342	8.0	64	70	214.0	242	12	252.0	125	M12	M20	M24	19	64.4	18^{JS9}
K8	265	410	9.0	102	115	263.0	300	20	311.0	145	M12	M20	M24	19	74.9	20^{JS9}
K9	315	495	10.0	102	115	302.0	350	26	361.0	180	M16	M24	M30	26	95.4	25^{JS9}

Type	ME10			ME20			ME30			ME40			ME50		
	a	m	n	a	m	n	a	m	n	a	m	n	a	m	n
K102	□98	124	36.0	□115	128	36.0	–	–	–	–	–	–	–	–	–
K202	□98	143	46.0	□115	147	46.0	□145	149	46.0	–	–	–	–	–	–
K203	∅140	180	46.0	–	–	–	–	–	–	–	–	–	–	–	–
K302	∅140	163	52.5	□115	167	52.5	□145	169	52.5	–	–	–	–	–	–
K303	∅140	200	52.5	∅160	210	16.0	–	–	–	–	–	–	–	–	–
K402	–	–	–	∅160	187	60.0	□145	189	60.0	□190	192	60.0	–	–	–
K403	∅140	220	60.0	∅160	230	23.0	–	–	–	–	–	–	–	–	–
K513	–	–	–	∅160	172	15.0	□145	174	15.0	□190	177	15.0	–	–	–
K514	–	–	–	∅160	215	15.0	–	–	–	–	–	–	–	–	–
K613	–	–	–	∅160	191	18.0	∅200	193	18.0	□190	196	18.0	∅300	210	18.0
K614	–	–	–	∅160	234	18.0	–	–	–	–	–	–	–	–	–
K713	–	–	–	–	–	–	∅200	221	20.0	□190	224	20.0	∅300	237	20.0
K714	–	–	–	∅160	263	20.0	∅200	283	20.0	–	–	–	–	–	–
K813	–	–	–	–	–	–	∅200	247	24.0	∅250	249	24.0	∅300	262	24.0
K814	–	–	–	–	–	–	∅200	308	24.0	∅250	320	5.0	–	–	–
K913	–	–	–	–	–	–	–	–	–	∅250	294	25.0	∅300	307	25.0
K914	–	–	–	–	–	–	∅200	353	25.0	∅250	365	25.0	–	–	–

Example dimensions for the motor connection

Type	Øb6	Øe6	Ød2max	l5	□a6	c	c6	f6	l7	s6
K_ME10	95^{H7}	115	19	41	100	21	61.0	4.0	3.0	M8
K_ME20	110^{H7}	130	32	53	120	24	74.0	4.0	3.5	M8
K_ME30	130^{H7}	165	38	62	150	26	86.0	5.5	4.5	M10
K_ME40	180^{H7}	215	48	82	204	35	123.0	5.5	5.5	M12
K_ME50	180^{H7}	215	60	86	230	43	124.5	6.0	5.0	M12

In the table above, you will find example dimensions for the motor connection for the ME motor adapter. **Note that when dimension c is lengthened (depending on the motor used), dimensions c6, l5 and lg are also lengthened accordingly.**

You will find additional motor connection dimensions for the ME motor adapter in our STOBER Configurator at http://configurator.stoeber.de. Here, you can directly download a 3D model of your drive.

16.3.4 A shaft design (hollow shaft), NGD housing design (foot + pitch circle diameter + torque arm bracket)

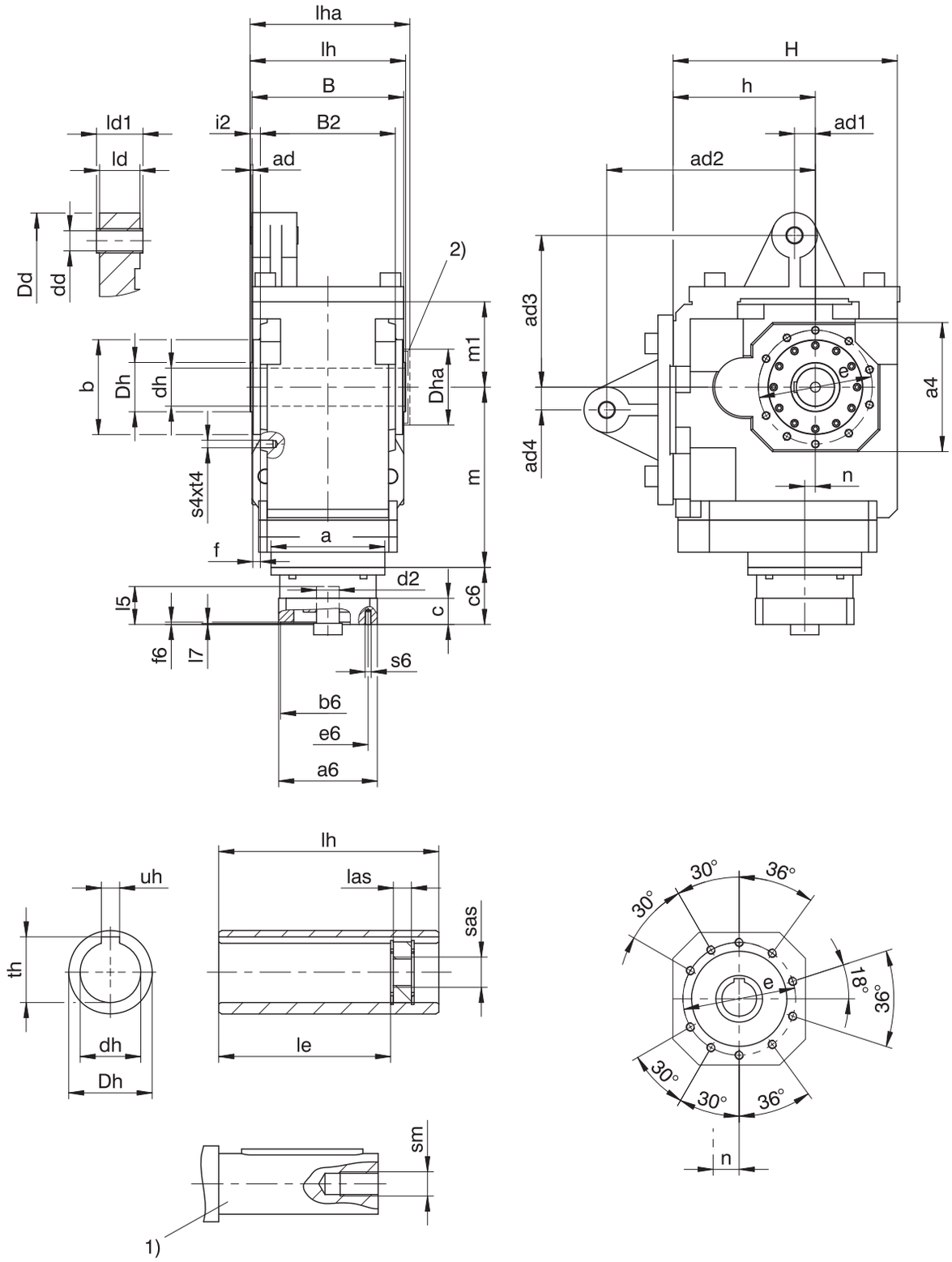

1) The length of the machine shaft must be at least 2.2 x ∅dh and the length of the feather key must be at least 2 x ∅dh.

– If you brace the gear units without the torque arm brackets provided by the manufacturer for this purpose, the dimensions for ad2 and ad3 must meet the specified value.

2) Cover (optional)

Dimensions of gear units

Type	□a4	ad	ad1	ad2	ad3	ad4	Øb	B	B2	Ødd	Ødh	ØDd	ØDh	Dha	Øe	f
K10	340	5	60	550	400	55	250_{h6}	400	356	40^{H9}	100^{H7}	120	130	∅200	300	20

Type	h	H	i2	ld	ld1	le	lh	las	lha	m1	s4	sm	sas	t4	th	uh
K10	375	591	27	118	124	361	410	26	441	225	M20	M24	M30	33	106.4	28^{JS9}

Type	ME40			ME50		
	a	m	n	a	m	n
K1013	–	–	–	∅300	392	28.0
K1014	∅250	450	28.0	∅300	475	28.0

Example dimensions for the motor connection

Type	Øb6	Øe6	Ød2max	l5	□a6	c	c6	f6	l7	s6
K_ME40	180^{H7}	215	48	82	204	35	123.0	5.5	5.5	M12
K_ME50	180^{H7}	215	60	86	230	43	124.5	6.0	5.0	M12

In the table above, you will find example dimensions for the motor connection for the ME motor adapter. **Note that when dimension c is lengthened (depending on the motor used), dimensions c6, l5 and lg are also lengthened accordingly.**

You will find additional motor connection dimensions for the ME motor adapter in our STOBER Configurator at http://configurator.stoeber.de. Here, you can directly download a 3D model of your drive.

16.3.5 A shaft design (hollow shaft), F housing design (round flange)

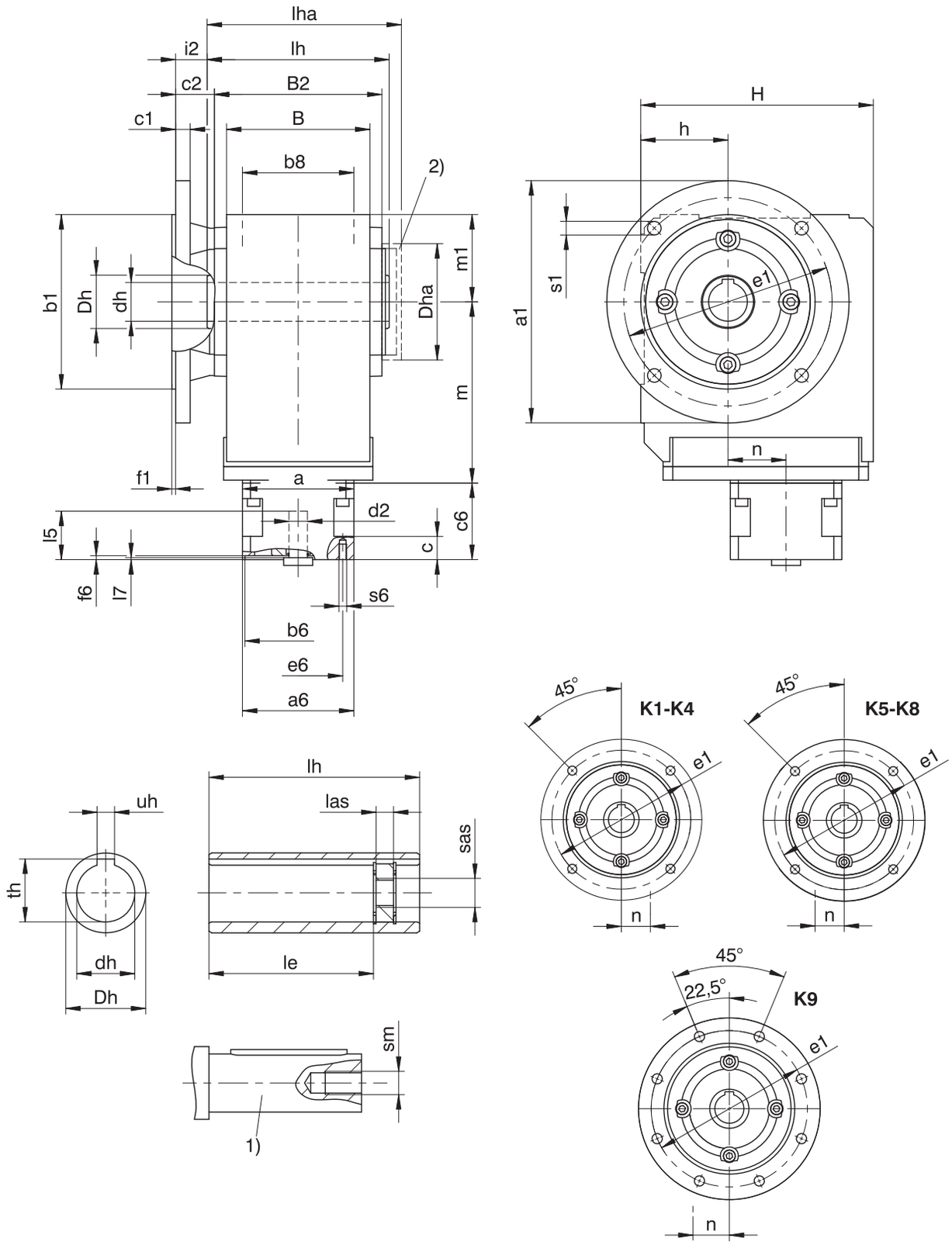

1) The length of the machine shaft must be at least 2.2 x ∅dh and the length of the feather key must be at least 2 x ∅dh.

2) Cover (optional)

Dimensions of gear units

Type	Øa1	Øb1	b8	B	B2	c1	c2	Ødh	ØDh	Dha	Øe1	f1	h	H	i2	le	lh	las	lha	m1	Øs1	sm	sas	th	uh
K1	160	110_{j6}	70	90	106	10	32.0	20^{H7}	40	□105	130	3.5	60	160	25.0	98.0	120	12	127.0	60	9	M6	M8	22.8	6^{JS9}
K1	160	110_{j6}	70	90	106	10	32.0	25^{H7}	40	□105	130	3.5	60	160	25.0	98.0	120	12	127.0	60	9	M10	M12	28.3	8^{JS9}
K1	160	110_{j6}	70	90	106	10	32.0	30^{H7}	40	□105	130	3.5	60	160	25.0	93.5	120	12	127.0	60	9	M10	M12	32.0	8^{JS9}
K2	200	130_{j6}	90	115	134	12	32.0	30^{H7}	45	□116	165	3.5	65	190	25.0	121.5	148	12	156.0	65	11	M10	M12	33.3	8^{JS9}
K3	200	130_{j6}	105	130	146	14	38.0	35^{H7}	50	□132	165	3.5	75	213	31.0	125.0	160	12	168.0	75	11	M12	M16	38.3	10^{JS9}
K4	250	180_{j6}	120	148	173	15	40.0	40^{H7}	55	□152	215	4.0	90	240	32.5	157.0	188	12	197.5	90	14	M16	M20	43.3	12^{JS9}
K5	250	180_{j6}	125	160	185	15	39.5	50^{H7}	65	□145	215	4.0	160	260	32.0	164.0	200	12	209.5	100	14	M16	M20	53.8	14^{JS9}
K6	300	230_{j6}	130	168	200	17	36.0	50^{H7}	70	∅183	265	4.0	190	310	28.5	179.0	215	12	224.5	120	14	M16	M20	53.8	14^{JS9}
K7	350	250_{h6}	145	190	226	18	44.0	60^{H7}	85	∅205	300	5.0	212	342	36.0	214.0	242	12	252.0	125	18	M20	M24	64.4	18^{JS9}
K8	400	300_{h6}	185	235	282	20	45.0	70^{H7}	100	∅184	350	5.0	265	410	36.0	263.0	300	20	311.0	145	18	M20	M24	74.9	20^{JS9}
K9	450	350_{h6}	225	285	330	23	50.0	90^{H7}	120	∅230	400	5.0	315	495	40.0	302.0	350	26	361.0	180	18	M24	M30	95.4	25^{JS9}

Dimensions of additional round flanges

Type	Øa1	Øb1	c1	Øe1	f1	Øs1
K1	140	95_{j6}	10	115	3.0	9
K2	160	110_{j6}	12	130	3.5	9
K3	160	110_{j6}	14	130	3.5	9
K3	250	180_{j6}	14	215	4.0	14
K8	350	250_{h6}	18	300	5.0	18
K8	450	350_{h6}	20	400	5.0	18

Type	ME10			ME20			ME30			ME40			ME50		
	a	m	n	a	m	n	a	m	n	a	m	n	a	m	n
K102	□98	124	36.0	□115	128	36.0	–	–	–	–	–	–	–	–	–
K202	□98	143	46.0	□115	147	46.0	□145	149	46.0	–	–	–	–	–	–
K203	∅140	180	46.0	–	–	–	–	–	–	–	–	–	–	–	–
K302	∅140	163	52.5	□115	167	52.5	□145	169	52.5	–	–	–	–	–	–
K303	∅140	200	52.5	∅160	210	16.0	–	–	–	–	–	–	–	–	–
K402	–	–	–	∅160	187	60.0	□145	189	60.0	□190	192	60.0	–	–	–
K403	∅140	220	60.0	∅160	230	23.0	–	–	–	–	–	–	–	–	–
K513	–	–	–	∅160	172	15.0	□145	174	15.0	□190	177	15.0	–	–	–
K514	–	–	–	∅160	215	15.0	–	–	–	–	–	–	–	–	–
K613	–	–	–	∅160	191	18.0	∅200	193	18.0	□190	196	18.0	∅300	210	18.0
K614	–	–	–	∅160	234	18.0	–	–	–	–	–	–	–	–	–
K713	–	–	–	–	–	–	∅200	221	20.0	□190	224	20.0	∅300	237	20.0
K714	–	–	–	∅160	263	20.0	∅200	283	20.0	–	–	–	–	–	–
K813	–	–	–	–	–	–	∅200	247	24.0	∅250	249	24.0	∅300	262	24.0
K814	–	–	–	–	–	–	∅200	308	24.0	∅250	320	5.0	–	–	–
K913	–	–	–	–	–	–	–	–	–	∅250	294	25.0	∅300	307	25.0
K914	–	–	–	–	–	–	∅200	353	25.0	∅250	365	25.0	–	–	–

Example dimensions for the motor connection

Type	Øb6	Øe6	Ød2max	l5	□a6	c	c6	f6	l7	s6
K_ME10	95^{H7}	115	19	41	100	21	61.0	4.0	3.0	M8
K_ME20	110^{H7}	130	32	53	120	24	74.0	4.0	3.5	M8
K_ME30	130^{H7}	165	38	62	150	26	86.0	5.5	4.5	M10
K_ME40	180^{H7}	215	48	82	204	35	123.0	5.5	5.5	M12
K_ME50	180^{H7}	215	60	86	230	43	124.5	6.0	5.0	M12

In the table above, you will find example dimensions for the motor connection for the ME motor adapter. **Note that when dimension c is lengthened (depending on the motor used), dimensions c6, l5 and lg are also lengthened accordingly.**

You will find additional motor connection dimensions for the ME motor adapter in our STOBER Configurator at http://configurator.stoeber.de. Here, you can directly download a 3D model of your drive.

16.3.6 A shaft design (hollow shaft), NF housing design (foot + round flange)

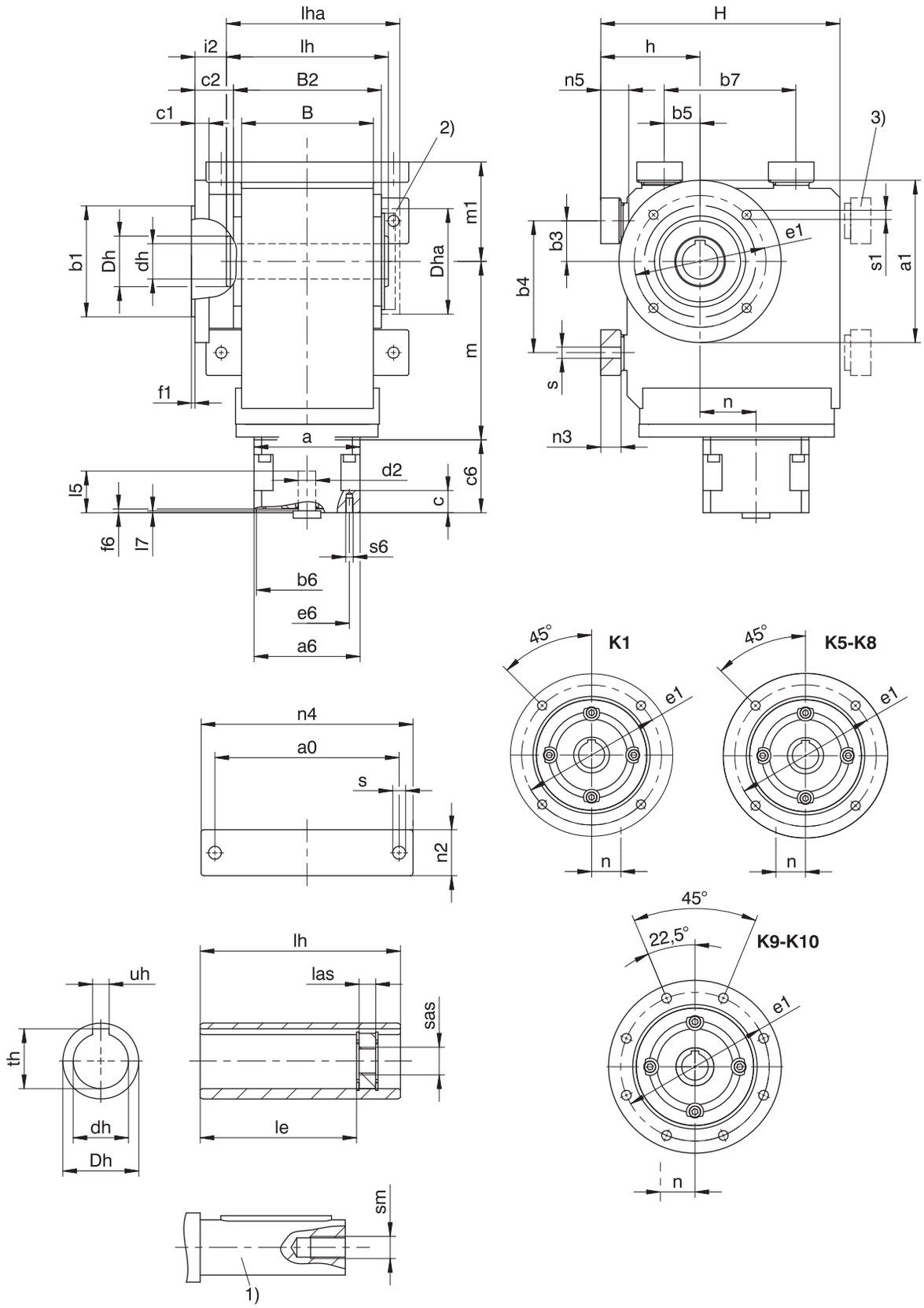

1) The length of the machine shaft must be at least 2.2 x ∅dh and the length of the feather key must be at least 2 x ∅dh.

2) Cover (optional)

3) Only for K1 (other sizes on request)

Dimensions of gear units

Type	a0	Øa1	Øb1	b3	b4	b5	b7	B	B2	c1	c2	Ødh	ØDh	Dha	Øe1	f1	h
K1	115	160	110_{j6}	30	90	30	90	90	106	10	32.0	20^{H7}	40	□105	130	3.5	75
K1	115	160	110_{j6}	30	90	30	90	90	106	10	32.0	25^{H7}	40	□105	130	3.5	75
K1	115	160	110_{j6}	30	90	30	90	90	106	10	32.0	30^{H7}	40	□105	130	3.5	75
K5	200	250	180_{j6}	40	140	100	140	160	185	15	39.5	50^{H7}	65	□145	215	4.0	190
K6	210	300	230_{j6}	50	160	110	160	168	200	17	36.0	50^{H7}	70	∅183	265	4.0	220
K7	241	350	250_{h6}	55	180	125	180	190	226	18	44.0	60^{H7}	85	∅205	300	5.0	250
K8	300	400	300_{h6}	75	240	165	240	235	282	20	45.0	70^{H7}	100	∅184	350	5.0	310
K9	360	450	350_{h6}	95	280	185	280	285	330	23	50.0	90^{H7}	120	∅230	400	5.0	365
K10	330	550	450_{h6}	115	350	265	420	400	356	25	78.0	100^{H7}	130	∅200	500	5.0	420

Type	H	i2	le	lh	las	lha	m1	n2	n3	n4	n5	Øs	Øs1	sm	sas	th	uh
K1	175	25.0	98.0	120	12	127.0	75	30	13	140	15	9.0	9	M6	M8	22.8	6^{JS9}
K1	175	25.0	98.0	120	12	127.0	75	30	13	140	15	9.0	9	M10	M12	28.3	8^{JS9}
K1	175	25.0	93.5	120	12	127.0	75	30	13	140	15	9.0	9	M10	M12	32.0	8^{JS9}
K5	290	32.0	164.0	200	12	209.5	130	60	27	240	30	18.0	14	M16	M20	53.8	14^{JS9}
K6	340	28.5	179.0	215	12	224.5	150	65	27	250	30	18.5	14	M16	M20	53.8	14^{JS9}
K7	380	36.0	214.0	242	12	252.0	163	70	35	290	38	23.0	18	M20	M24	64.4	18^{JS9}
K8	455	36.0	263.0	300	20	311.0	190	85	41	360	45	27.0	18	M20	M24	74.9	20^{JS9}
K9	545	40.0	302.0	350	26	361.0	230	95	46	430	50	31.0	18	M24	M30	95.4	25^{JS9}
K10	636	51.0	361.0	410	26	441.0	270	120	–	400	45	39.0	18	M24	M30	106.4	28^{JS9}

Dimensions of additional round flanges

Type	Øa1	Øb1	c1	Øe1	f1	Øs1
K1	140	95_{j6}	10	115	3	9
K8	350	250_{h6}	18	300	5	18
K8	450	350_{h6}	20	400	5	18

Type	ME10			ME20			ME30			ME40			ME50		
	a	m	n	a	m	n	a	m	n	a	m	n	a	m	n
K102	□98	124	36.0	□115	128	36.0	–	–	–	–	–	–	–	–	–
K513	–	–	–	∅160	172	15.0	□145	174	15.0	□190	177	15.0	–	–	–
K514	–	–	–	∅160	215	15.0	–	–	–	–	–	–	–	–	–
K613	–	–	–	∅160	191	18.0	∅200	193	18.0	□190	196	18.0	∅300	210	18.0
K614	–	–	–	∅160	234	18.0	–	–	–	–	–	–	–	–	–
K713	–	–	–	–	–	–	∅200	221	20.0	□190	224	20.0	∅300	237	20.0
K714	–	–	–	∅160	263	20.0	∅200	283	20.0	–	–	–	–	–	–
K813	–	–	–	–	–	–	∅200	247	24.0	∅250	249	24.0	∅300	262	24.0
K814	–	–	–	–	–	–	∅200	308	24.0	∅250	320	5.0	–	–	–
K913	–	–	–	–	–	–	–	–	–	∅250	294	25.0	∅300	307	25.0
K914	–	–	–	–	–	–	∅200	353	25.0	∅250	365	25.0	–	–	–
K1013	–	–	–	–	–	–	–	–	–	–	–	–	∅300	392	28.0
K1014	–	–	–	–	–	–	–	–	–	∅250	450	28.0	∅300	475	28.0

Example dimensions for the motor connection

Type	Øb6	Øe6	Ød2max	l5	□a6	c	c6	f6	l7	s6
K_ME10	95^{H7}	115	19	41	100	21	61.0	4.0	3.0	M8
K_ME20	110^{H7}	130	32	53	120	24	74.0	4.0	3.5	M8
K_ME30	130^{H7}	165	38	62	150	26	86.0	5.5	4.5	M10
K_ME40	180^{H7}	215	48	82	204	35	123.0	5.5	5.5	M12
K_ME50	180^{H7}	215	60	86	230	43	124.5	6.0	5.0	M12

In the table above, you will find example dimensions for the motor connection for the ME motor adapter. **Note that when dimension c is lengthened (depending on the motor used), dimensions c6, l5 and lg are also lengthened accordingly.**

You will find additional motor connection dimensions for the ME motor adapter in our STOBER Configurator at http://configurator.stoeber.de. Here, you can directly download a 3D model of your drive.

16.3.7 S shaft design (hollow shaft with shrink ring), G housing design (pitch circle diameter)

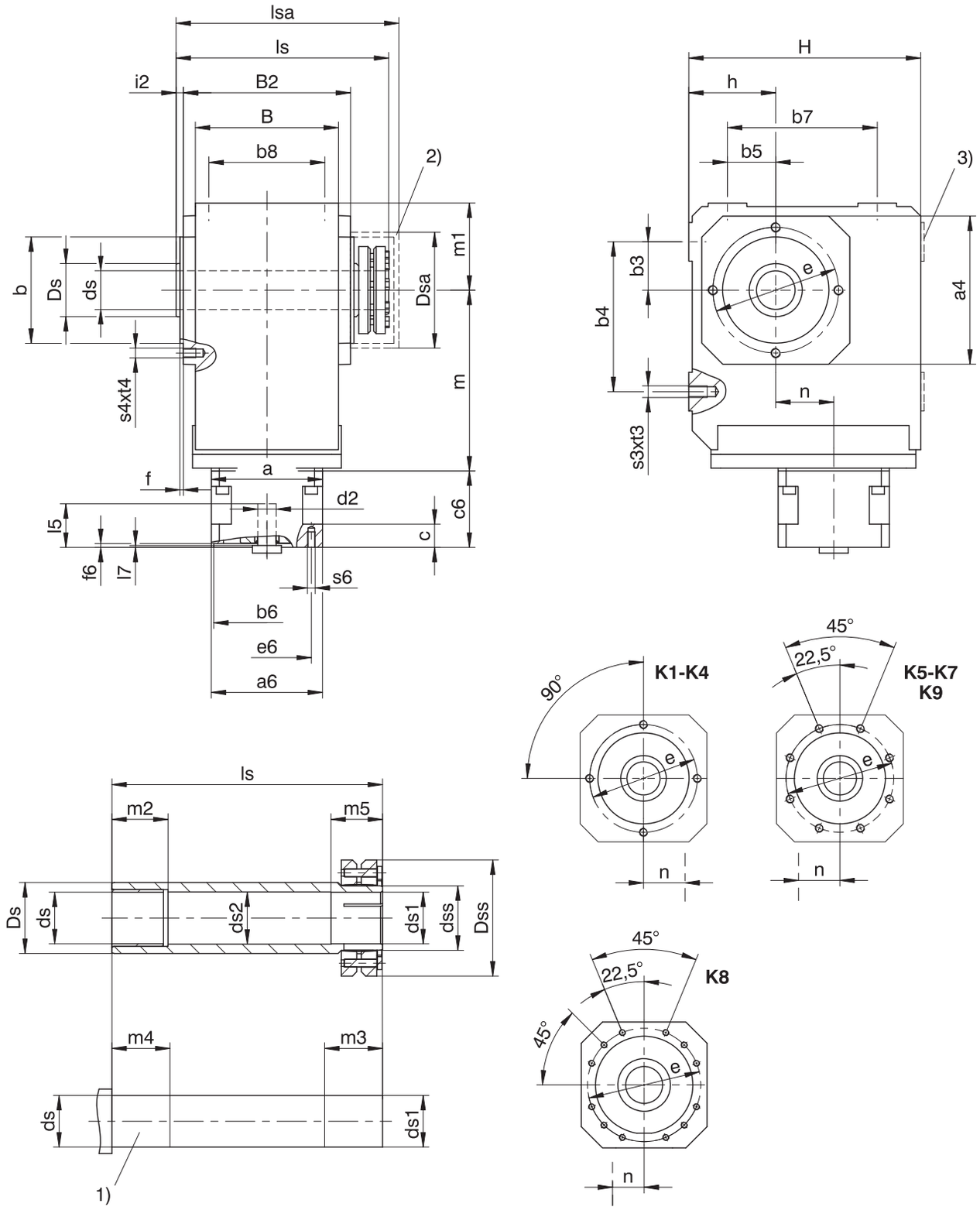

1) Machine shaft: The dimension ls must meet or exceed the specified value.

2) Cover (optional)

3) Only for K1 (other sizes on request)

Dimensions of gear units

Type	□a4	Øb	b3	b4	b5	b7	b8	B	B2	Øds	Øds1	Øds2	Ødss	ØDs	ØDsa	ØDss	Øe	f	h	H	i2	ls	lsa	m1	m2	m3	m4	m5	s3	s4	t3	t4
K1	105	75_{j6}	30	90	30	90	70	90	106	25_{h9}	25_{h9}^{H7}	25.5	30	40	80	60	90	3.0	60	160	7.0	149	163	60	20	34	25	29	M8	M8	13	13
K2	116	82_{j6}	35	115	35	115	90	115	134	30_{h9}	30_{h9}^{H7}	30.5	36	45	88	72	100	3.0	65	190	7.0	178	193	65	25	39	30	34	M10	M8	16	13
K3	132	95_{j6}	40	130	40	130	105	130	146	35_{h9}	35_{h9}^{H7}	35.5	44	50	101	80	115	3.0	75	213	7.0	190	206	75	30	39	35	34	M10	M8	16	13
K4	152	110_{j6}	50	155	50	155	120	148	173	40_{h9}	40_{h9}^{H7}	40.5	50	55	114	88	130	3.5	90	240	7.5	220	243	90	40	39	45	34	M12	M10	19	16
K5	145	110_{j6}	40	140	100	140	125	160	185	50_{h9}	50_{h9}^{H7}	50.5	62	65	116	106	130	3.5	160	260	7.5	237	254	100	40	44	45	39	M16	M10	26	16
K6	180	140_{j6}	50	160	110	160	130	168	200	50_{h9}	50_{h9}^{H7}	50.5	62	70	128	106	165	3.5	190	310	7.5	254	276	120	40	45	45	40	M16	M10	26	16
K7	195	155_{h6}	55	180	125	180	145	190	226	60_{h6}	60_{h6}^{H7}	62.0	75	85	161.5	138	185	3.5	212	342	8.0	278	314	125	40	45	45	40	M20	M12	33	19
K8	226	185_{h6}	75	240	165	240	185	235	282	70_{h6}	70_{h6}^{H7}	72.0	90	100	193	155	215	4.0	265	410	9.0	352	378	145	50	60	60	50	M24	M12	38	19
K9	280	230_{h6}	95	280	185	280	225	285	330	90_{h6}	90_{h6}^{H7}	92.0	120	120	244	200	265	5.0	315	495	10.0	418	428	180	60	70	70	60	M30	M16	48	26

Type	ME10			ME20			ME30			ME40			ME50		
	a	m	n	a	m	n	a	m	n	a	m	n	a	m	n
K102	□98	124	36.0	□115	128	36.0	–	–	–	–	–	–	–	–	–
K202	□98	143	46.0	□115	147	46.0	□145	149	46.0	–	–	–	–	–	–
K203	∅140	180	46.0	–	–	–	–	–	–	–	–	–	–	–	–
K302	∅140	163	52.5	□115	167	52.5	□145	169	52.5	–	–	–	–	–	–
K303	∅140	200	52.5	∅160	210	16.0	–	–	–	–	–	–	–	–	–
K402	–	–	–	∅160	187	60.0	□145	189	60.0	□190	192	60.0	–	–	–
K403	∅140	220	60.0	∅160	230	23.0	–	–	–	–	–	–	–	–	–
K513	–	–	–	∅160	172	15.0	□145	174	15.0	□190	177	15.0	–	–	–
K514	–	–	–	∅160	215	15.0	–	–	–	–	–	–	–	–	–
K613	–	–	–	∅160	191	18.0	∅200	193	18.0	□190	196	18.0	∅300	210	18.0
K614	–	–	–	∅160	234	18.0	–	–	–	–	–	–	–	–	–
K713	–	–	–	–	–	–	∅200	221	20.0	□190	224	20.0	∅300	237	20.0
K714	–	–	–	∅160	263	20.0	∅200	283	20.0	–	–	–	–	–	–
K813	–	–	–	–	–	–	∅200	247	24.0	∅250	249	24.0	∅300	262	24.0
K814	–	–	–	–	–	–	∅200	308	24.0	∅250	320	5.0	–	–	–
K913	–	–	–	–	–	–	–	–	–	∅250	294	25.0	∅300	307	25.0
K914	–	–	–	–	–	–	∅200	353	25.0	∅250	365	25.0	–	–	–

Example dimensions for the motor connection

Type	Øb6	Øe6	Ød2max	l5	□a6	c	c6	f6	l7	s6
K_ME10	95^{H7}	115	19	41	100	21	61.0	4.0	3.0	M8
K_ME20	110^{H7}	130	32	53	120	24	74.0	4.0	3.5	M8
K_ME30	130^{H7}	165	38	62	150	26	86.0	5.5	4.5	M10
K_ME40	180^{H7}	215	48	82	204	35	123.0	5.5	5.5	M12
K_ME50	180^{H7}	215	60	86	230	43	124.5	6.0	5.0	M12

In the table above, you will find example dimensions for the motor connection for the ME motor adapter. **Note that when dimension c is lengthened (depending on the motor used), dimensions c6, l5 and lg are also lengthened accordingly.**

You will find additional motor connection dimensions for the ME motor adapter in our STOBER Configurator at http://configurator.stoeber.de. Here, you can directly download a 3D model of your drive.

16.3.8 S shaft design (hollow shaft with shrink ring), NG housing design (foot + pitch circle diameter)

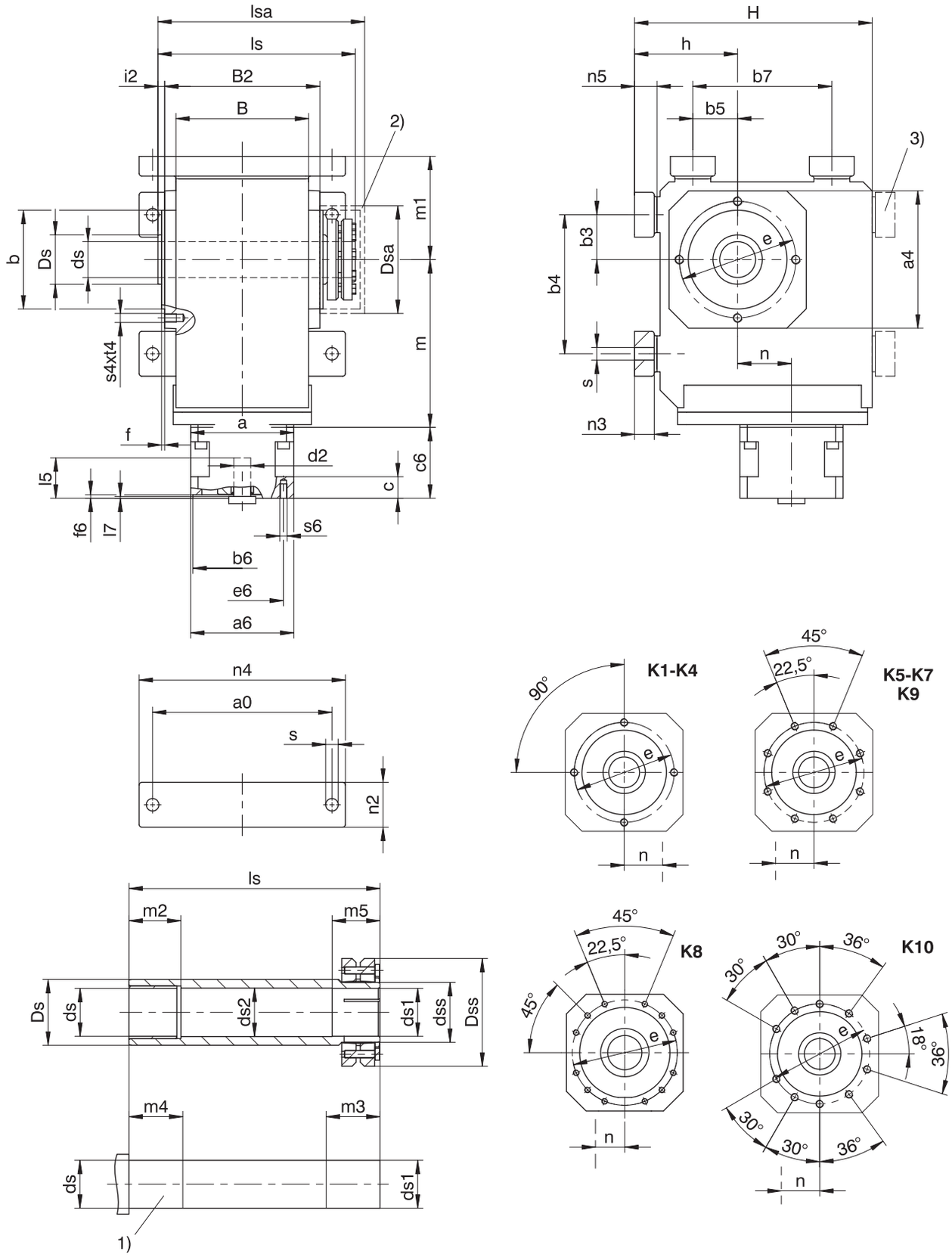

1) Machine shaft: The dimension ls must meet or exceed the specified value.

2) Cover (optional)

3) Only for K1 (other sizes on request)

Dimensions of gear units

Type	a0	a4	Øb	b3	b4	b5	b7	B	B2	Øds	Øds1	Øds2	Ødss	ØDs	ØDsa
K1	115	105	75_{j6}	30	90	30	90	90	106	25_{h9}	25_{h9}^{H7}	25.5	30	40	80
K2	155	116	82_{j6}	35	115	35	115	115	134	30_{h9}	30_{h9}^{H7}	30.5	36	45	88
K3	170	132	95_{j6}	40	130	40	130	130	146	35_{h9}	35_{h9}^{H7}	35.5	44	50	101
K4	200	152	110_{j6}	50	155	50	155	148	173	40_{h9}	40_{h9}^{H7}	40.5	50	55	114
K5	200	145	110_{j6}	40	140	100	140	160	185	50_{h9}	50_{h9}^{H7}	50.5	62	65	116
K6	210	180	140_{j6}	50	160	110	160	168	200	50_{h9}	50_{h9}^{H7}	50.5	62	70	128
K7	241	195	155_{j6}	55	180	125	180	190	226	60_{h6}	60_{h6}^{H7}	62.0	75	85	161.5
K8	300	226	185_{j6}	75	240	165	240	235	282	70_{h6}	70_{h6}^{H7}	72.0	90	100	193
K9	360	280	230_{j6}	95	280	185	280	285	330	90_{h6}	90_{h6}^{H7}	92.0	120	120	244
K10	330	340	250_{h6}	115	350	265	420	400	356	100_{h6}	100_{h6}^{H7}	102.0	130	130	274

Type	ØDss	Øe	f	h	H	i2	ls	lsa	m1	m2	m3	m4	m5	n2	n3	n4	n5	Øs	s4	t4
K1	60	90	3.0	75	175	7.0	149	163	75	20	34	25	29	30	13	140	15	9.0	M8	13
K2	72	100	3.0	88	213	7.0	178	193	88	25	39	30	34	40	20	185	23	11.0	M8	13
K3	80	115	3.0	98	236	7.0	190	206	98	30	39	35	34	45	20	200	23	11.0	M8	13
K4	88	130	3.5	115	265	7.5	220	243	115	40	39	45	34	50	22	230	25	14.0	M10	16
K5	106	130	3.5	190	290	7.5	237	254	130	40	44	45	39	60	27	240	30	18.0	M10	16
K6	106	165	3.5	220	340	7.5	254	276	150	40	45	45	40	65	27	250	30	18.5	M10	16
K7	138	185	3.5	250	380	8.0	278	314	163	40	45	45	40	70	35	290	38	23.0	M12	19
K8	155	215	4.0	310	455	9.0	352	378	190	50	60	60	50	85	41	360	45	27.0	M12	19
K9	200	265	5.0	365	545	10.0	418	428	230	60	70	70	60	95	46	430	50	31.0	M16	26
K10	215	300	20.0	420	636	27.0	483	497	270	60	80	70	70	120	–	400	45	39.0	M20	33

Type	ME10			ME20			ME30			ME40			ME50		
	a	m	n	a	m	n	a	m	n	a	m	n	a	m	n
K102	□98	124	36.0	□115	128	36.0	–	–	–	–	–	–	–	–	–
K202	□98	143	46.0	□115	147	46.0	□145	149	46.0	–	–	–	–	–	–
K203	∅140	180	46.0	–	–	–	–	–	–	–	–	–	–	–	–
K302	∅140	163	52.5	□115	167	52.5	□145	169	52.5	–	–	–	–	–	–
K303	∅140	200	52.5	∅160	210	16.0	–	–	–	–	–	–	–	–	–
K402	–	–	–	∅160	187	60.0	□145	189	60.0	□190	192	60.0	–	–	–
K403	∅140	220	60.0	∅160	230	23.0	–	–	–	–	–	–	–	–	–
K513	–	–	–	∅160	172	15.0	□145	174	15.0	□190	177	15.0	–	–	–
K514	–	–	–	∅160	215	15.0	–	–	–	–	–	–	–	–	–
K613	–	–	–	∅160	191	18.0	∅200	193	18.0	□190	196	18.0	∅300	210	18.0
K614	–	–	–	∅160	234	18.0	–	–	–	–	–	–	–	–	–
K713	–	–	–	–	–	–	∅200	221	20.0	□190	224	20.0	∅300	237	20.0
K714	–	–	–	∅160	263	20.0	∅200	283	20.0	–	–	–	–	–	–
K813	–	–	–	–	–	–	∅200	247	24.0	∅250	249	24.0	∅300	262	24.0
K814	–	–	–	–	–	–	∅200	308	24.0	∅250	320	5.0	–	–	–
K913	–	–	–	–	–	–	–	–	–	∅250	294	25.0	∅300	307	25.0
K914	–	–	–	–	–	–	∅200	353	25.0	∅250	365	25.0	–	–	–
K1013	–	–	–	–	–	–	–	–	–	–	–	–	∅300	392	28.0
K1014	–	–	–	–	–	–	–	–	–	∅250	450	28.0	∅300	475	28.0

Example dimensions for the motor connection

Type	Øb6	Øe6	Ød2max	l5	□a6	c	c6	f6	l7	s6
K_ME10	95^{H7}	115	19	41	100	21	61.0	4.0	3.0	M8
K_ME20	110^{H7}	130	32	53	120	24	74.0	4.0	3.5	M8
K_ME30	130^{H7}	165	38	62	150	26	86.0	5.5	4.5	M10
K_ME40	180^{H7}	215	48	82	204	35	123.0	5.5	5.5	M12
K_ME50	180^{H7}	215	60	86	230	43	124.5	6.0	5.0	M12

In the table above, you will find example dimensions for the motor connection for the ME motor adapter. **Note that when dimension c is lengthened (depending on the motor used), dimensions c6, l5 and lg are also lengthened accordingly.**

You will find additional motor connection dimensions for the ME motor adapter in our STOBER Configurator at http://configurator.stoeber.de. Here, you can directly download a 3D model of your drive.

16.3.9 S shaft design (hollow shaft with shrink ring), GD housing design (pitch circle diameter + torque arm bracket)

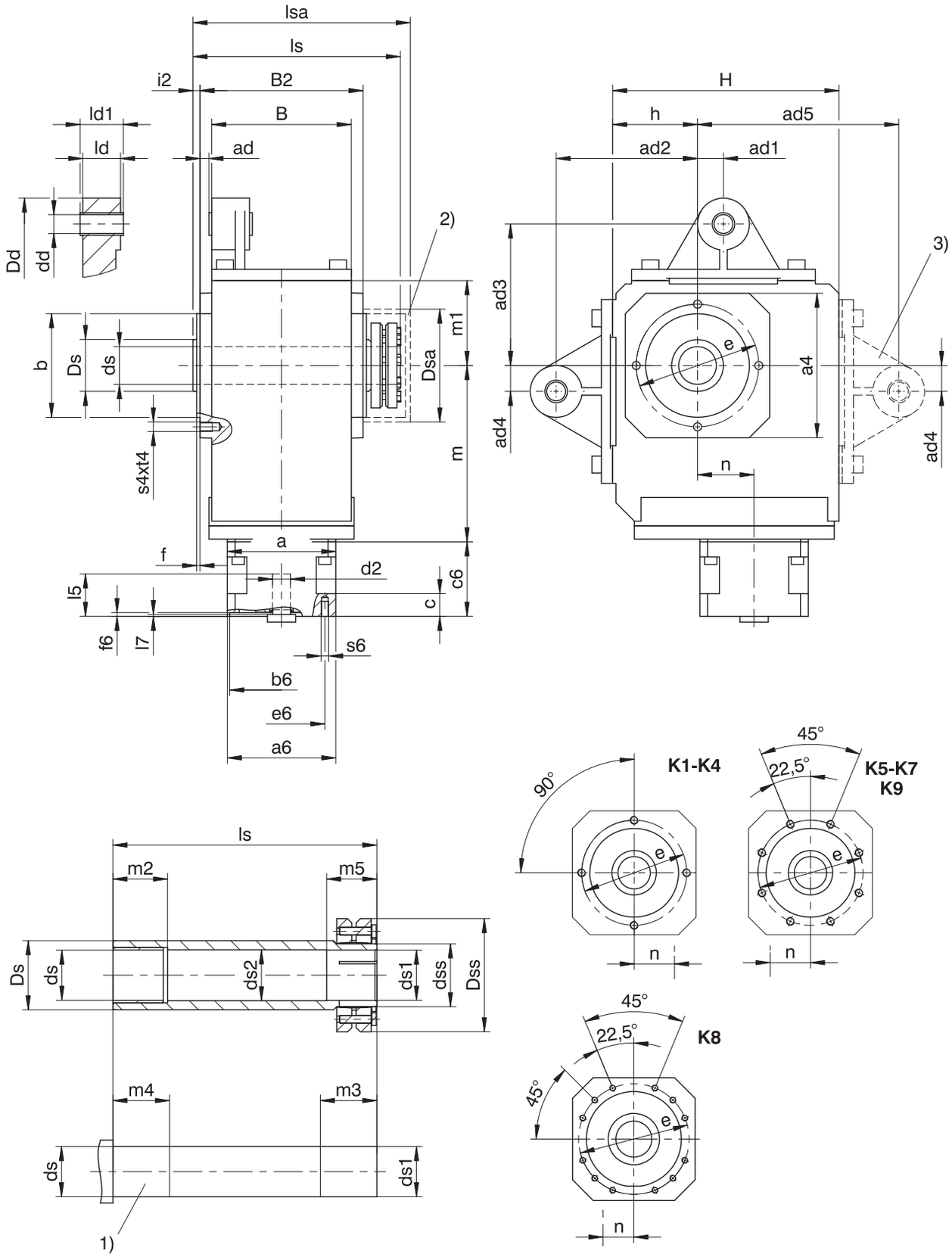

1) Machine shaft: The dimension ls must meet or exceed the specified value.

2) Cover (optional)

3) Only for K1 (other sizes on request)

– If you brace the gear units without the torque arm brackets provided by the manufacturer for this purpose, the dimensions for ad2 and ad3 must meet the specified value.

Dimensions of gear units

Type	□a4	ad	ad1	ad2	ad3	ad4	ad5	Øb	B	B2	Ødd	Øds	Øds1	Øds2	Ødss	ØDd	ØDs	ØDsa
K1	105	6.0	15.0	90	90	15.0	130	75_{j6}	90	106	12^{H9}	25_{h9}	25_{h9}^{H7}	25.5	30	43	40	80
K2	116	6.5	22.5	100	100	22.5	–	82_{j6}	115	134	16^{H9}	30_{h9}	30_{h9}^{H7}	30.5	36	45	45	88
K3	132	5.0	25.0	120	120	25.0	–	95_{j6}	130	146	16^{H9}	35_{h9}	35_{h9}^{H7}	35.5	44	45	50	101
K4	152	9.5	27.5	150	150	27.5	–	110_{j6}	148	173	20^{H9}	40_{h9}	40_{h9}^{H7}	40.5	50	55	55	114
K5	145	9.5	30.0	250	190	30.0	–	110_{j6}	160	185	20^{H9}	50_{h9}	50_{h9}^{H7}	50.5	62	58	65	116
K6	180	13.0	30.0	250	180	30.0	–	140_{j6}	168	200	20^{H9}	50_{h9}	50_{h9}^{H7}	50.5	62	58	70	128
K7	195	15.0	35.0	300	213	35.0	–	155_{h6}	190	226	20^{H9}	60_{h6}	60_{h6}^{H7}	62.0	75	68	85	161.5
K8	226	17.0	45.0	350	230	45.0	–	185_{h6}	235	282	24^{H9}	70_{h6}	70_{h6}^{H7}	72.0	90	72	100	193
K9	280	16.0	45.0	450	315	45.0	–	230_{h6}	285	330	24^{H9}	90_{h6}	90_{h6}^{H7}	92.0	120	75	120	244

Type	ØDss	Øe	f	h	H	i2	ld	ld1	ls	lsa	m1	m2	m3	m4	m5	s4	t4
K1	60	90	3.0	60	160	7.0	24	28	149	163	60	20	34	25	29	M8	13
K2	72	100	3.0	65	190	7.0	32	38	178	193	65	25	39	30	34	M8	13
K3	80	115	3.0	75	213	7.0	32	38	190	206	75	30	39	35	34	M8	13
K4	88	130	3.5	90	240	7.5	40	46	220	243	90	40	39	45	34	M10	16
K5	106	130	3.5	160	260	7.5	40	46	237	254	100	40	44	45	39	M10	16
K6	106	165	3.5	190	310	7.5	40	46	254	276	120	40	45	45	40	M10	16
K7	138	185	3.5	212	342	8.0	64	70	278	314	125	40	45	45	40	M12	19
K8	155	215	4.0	265	410	9.0	102	115	352	378	145	50	60	60	50	M12	19
K9	200	265	5.0	315	495	10.0	102	115	418	428	180	60	70	70	60	M16	26

Type	ME10			ME20			ME30			ME40			ME50		
	a	m	n	a	m	n	a	m	n	a	m	n	a	m	n
K102	□98	124	36.0	□115	128	36.0	–	–	–	–	–	–	–	–	–
K202	□98	143	46.0	□115	147	46.0	□145	149	46.0	–	–	–	–	–	–
K203	∅140	180	46.0	–	–	–	–	–	–	–	–	–	–	–	–
K302	∅140	163	52.5	□115	167	52.5	□145	169	52.5	–	–	–	–	–	–
K303	∅140	200	52.5	∅160	210	16.0	–	–	–	–	–	–	–	–	–
K402	–	–	–	∅160	187	60.0	□145	189	60.0	□190	192	60.0	–	–	–
K403	∅140	220	60.0	∅160	230	23.0	–	–	–	–	–	–	–	–	–
K513	–	–	–	∅160	172	15.0	□145	174	15.0	□190	177	15.0	–	–	–
K514	–	–	–	∅160	215	15.0	–	–	–	–	–	–	–	–	–
K613	–	–	–	∅160	191	18.0	∅200	193	18.0	□190	196	18.0	∅300	210	18.0
K614	–	–	–	∅160	234	18.0	–	–	–	–	–	–	–	–	–
K713	–	–	–	–	–	–	∅200	221	20.0	□190	224	20.0	∅300	237	20.0
K714	–	–	–	∅160	263	20.0	∅200	283	20.0	–	–	–	–	–	–
K813	–	–	–	–	–	–	∅200	247	24.0	∅250	249	24.0	∅300	262	24.0
K814	–	–	–	–	–	–	∅200	308	24.0	∅250	320	5.0	–	–	–
K913	–	–	–	–	–	–	–	–	–	∅250	294	25.0	∅300	307	25.0
K914	–	–	–	–	–	–	∅200	353	25.0	∅250	365	25.0	–	–	–

Example dimensions for the motor connection

Type	Øb6	Øe6	Ød2max	l5	□a6	c	c6	f6	l7	s6
K_ME10	95^{H7}	115	19	41	100	21	61.0	4.0	3.0	M8
K_ME20	110^{H7}	130	32	53	120	24	74.0	4.0	3.5	M8
K_ME30	130^{H7}	165	38	62	150	26	86.0	5.5	4.5	M10
K_ME40	180^{H7}	215	48	82	204	35	123.0	5.5	5.5	M12
K_ME50	180^{H7}	215	60	86	230	43	124.5	6.0	5.0	M12

In the table above, you will find example dimensions for the motor connection for the ME motor adapter. **Note that when dimension c is lengthened (depending on the motor used), dimensions c6, l5 and lg are also lengthened accordingly.**

You will find additional motor connection dimensions for the ME motor adapter in our STOBER Configurator at http://configurator.stoeber.de. Here, you can directly download a 3D model of your drive.

16.3.10 S shaft design (hollow shaft with shrink ring), NGD housing design (foot + pitch circle diameter + torque arm bracket)

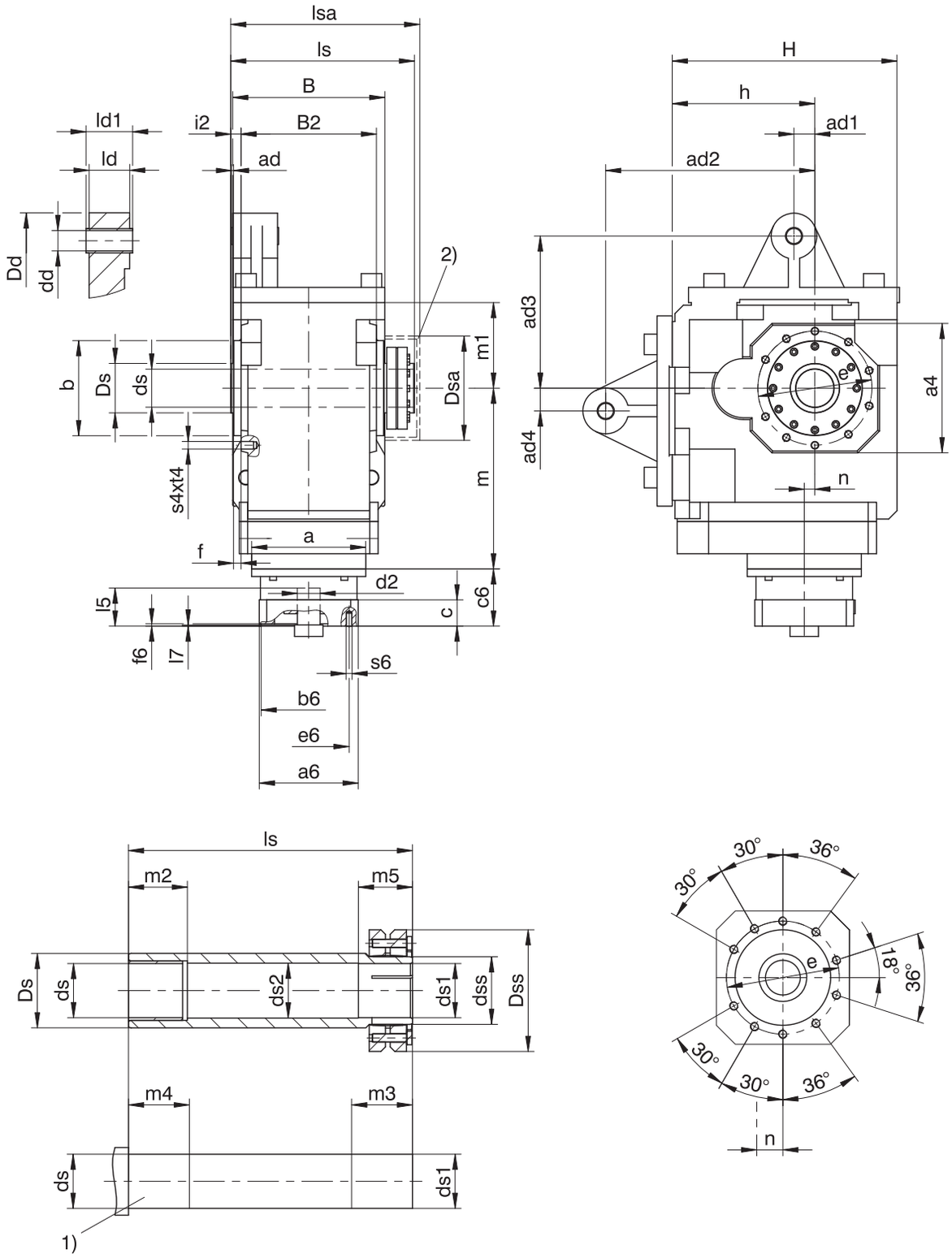

1) Machine shaft: The dimension ls must meet or exceed the specified value.

– If you brace the gear units without the torque arm brackets provided by the manufacturer for this purpose, the dimensions for ad2 and ad3 must meet the specified value.

2) Cover (optional)

Dimensions of gear units

Type	□a4	ad	ad1	ad2	ad3	ad4	Øb	B	B2	Ødd	Øds	Øds1	Øds2	Ødss	ØDd	ØDs	ØDsa
K10	340	5	55	550	400	60	250_{h6}	400	356	40^{H9}	100_{h6}	100_{h6}^{H7}	102	130	120	130	274

Type	ØDss	Øe	f	h	H	i2	ld	ld1	ls	lsa	m1	m2	m3	m4	m5	s4	t4
K10	215	300	20	375	591	27	118	124	483	497	225	60	80	70	70	M20	33

Type	ME40			ME50		
	a	m	n	a	m	n
K1013	–	–	–	∅300	392	28.0
K1014	∅250	450	28.0	∅300	475	28.0

Example dimensions for the motor connection

Type	Øb6	Øe6	Ød2max	l5	□a6	c	c6	f6	l7	s6
K_ME40	180^{H7}	215	48	82	204	35	123.0	5.5	5.5	M12
K_ME50	180^{H7}	215	60	86	230	43	124.5	6.0	5.0	M12

In the table above, you will find example dimensions for the motor connection for the ME motor adapter. **Note that when dimension c is lengthened (depending on the motor used), dimensions c6, l5 and lg are also lengthened accordingly.**

You will find additional motor connection dimensions for the ME motor adapter in our STOBER Configurator at http://configurator.stoeber.de. Here, you can directly download a 3D model of your drive.

16.3.11 S shaft design (hollow shaft with shrink ring), F housing design (round flange)

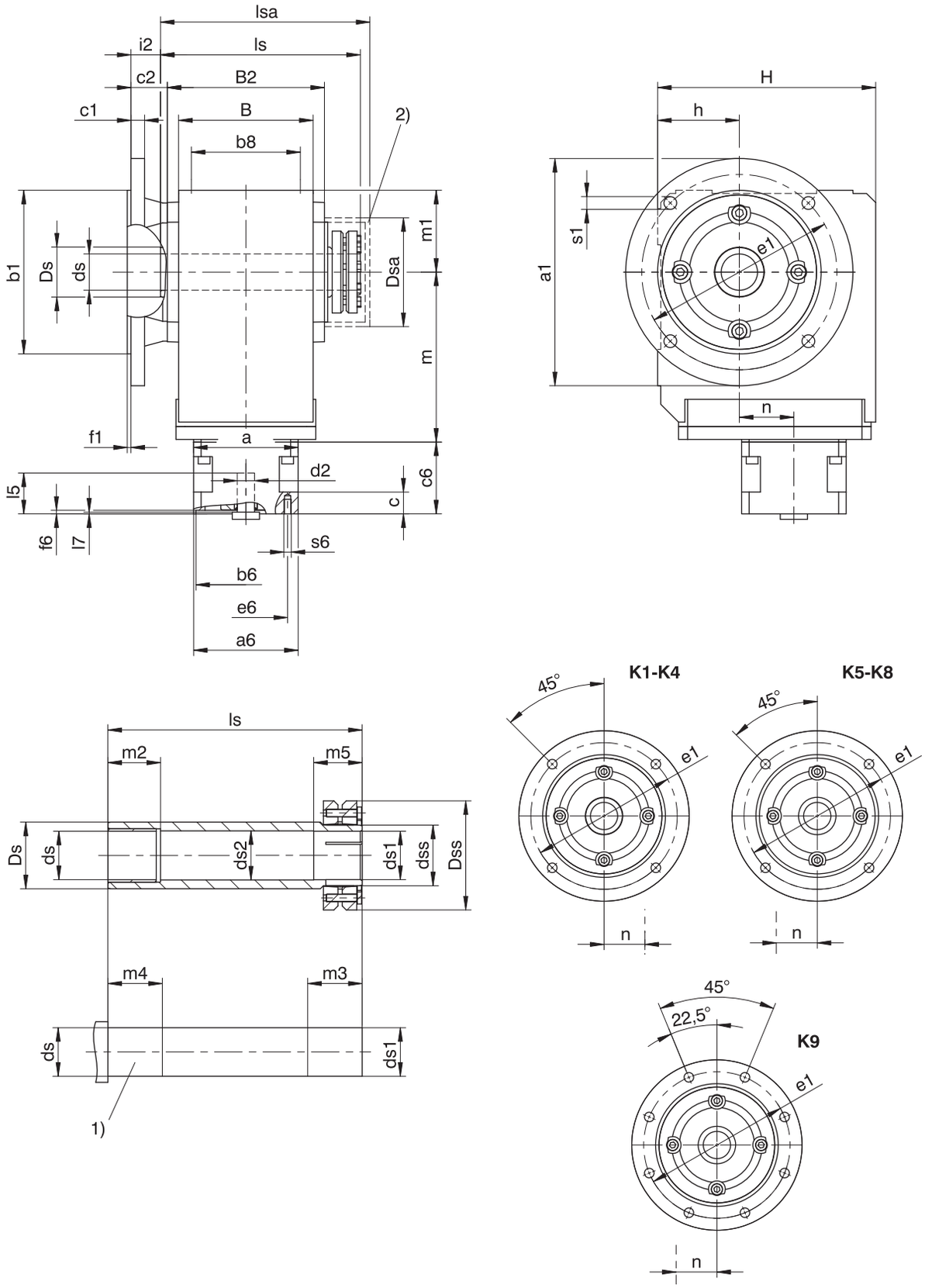

1) Machine shaft: The dimension ls must meet or exceed the specified value.

2) Cover (optional)

Dimensions of gear units

Type	Øa1	Øb1	b8	B	B2	c1	c2	Øds	Øds1	Øds2	Ødss	ØDs	ØDsa	ØDss	Øe1	f1	h	H	i2	ls	lsa	m1	m2	m3	m4	m5	Øs1
K1	160	110_{j6}	70	90	106	10	32.0	25_{h9}	25_{h9}^{H7}	25.5	30	40	80	60	130	3.5	60	160	25.0	149	163	60	20	34	25	29	9
K2	200	130_{j6}	90	115	134	12	32.0	30_{h9}	30_{h9}^{H7}	30.5	36	45	88	72	165	3.5	65	190	25.0	178	193	65	25	39	30	34	11
K3	200	130_{j6}	105	130	146	14	38.0	35_{h9}	35_{h9}^{H7}	35.5	44	50	101	80	165	3.5	75	213	31.0	190	206	75	30	39	35	34	11
K4	250	180_{j6}	120	148	173	15	40.0	40_{h9}	40_{h9}^{H7}	40.5	50	55	114	88	215	4.0	90	240	32.5	220	243	90	40	39	45	34	14
K5	250	180_{j6}	125	160	185	15	39.5	50_{h9}	50_{h9}^{H7}	50.5	62	65	116	106	215	4.0	160	260	32.0	237	254	100	40	44	45	39	14
K6	300	230_{j6}	130	168	200	17	36.0	50_{h9}	50_{h9}^{H7}	50.5	62	70	128	106	265	4.0	190	310	28.5	254	276	120	40	45	45	40	14
K7	350	250_{h6}	145	190	226	18	44.0	60_{h6}	60_{h6}^{H7}	62.0	75	85	161.5	138	300	5.0	212	342	36.0	278	314	125	40	45	45	40	18
K8	400	300_{h6}	185	235	282	20	45.0	70_{h6}	70_{h6}^{H7}	72.0	90	100	193	155	350	5.0	265	410	36.0	352	378	145	50	60	60	50	18
K9	450	350_{h6}	225	285	330	23	50.0	90_{h6}	90_{h6}^{H7}	92.0	120	120	244	200	400	5.0	315	495	40.0	418	428	180	60	70	70	60	18

Dimensions of additional round flanges

Type	Øa1	Øb1	c1	Øe1	f1	Øs1
K1	140	95_{j6}	10	115	3.0	9
K2	160	110_{j6}	12	130	3.5	9
K3	160	110_{j6}	14	130	3.5	9
K3	250	180_{j6}	14	215	4.0	14
K8	350	250_{h6}	18	300	5.0	18
K8	450	350_{h6}	20	400	5.0	18

Type	ME10			ME20			ME30			ME40			ME50		
	a	m	n	a	m	n	a	m	n	a	m	n	a	m	n
K102	□98	124	36.0	□115	128	36.0	–	–	–	–	–	–	–	–	–
K202	□98	143	46.0	□115	147	46.0	□145	149	46.0	–	–	–	–	–	–
K203	∅140	180	46.0	–	–	–	–	–	–	–	–	–	–	–	–
K302	∅140	163	52.5	□115	167	52.5	□145	169	52.5	–	–	–	–	–	–
K303	∅140	200	52.5	∅160	210	16.0	–	–	–	–	–	–	–	–	–
K402	–	–	–	∅160	187	60.0	□145	189	60.0	□190	192	60.0	–	–	–
K403	∅140	220	60.0	∅160	230	23.0	–	–	–	–	–	–	–	–	–
K513	–	–	–	∅160	172	15.0	□145	174	15.0	□190	177	15.0	–	–	–
K514	–	–	–	∅160	215	15.0	–	–	–	–	–	–	–	–	–
K613	–	–	–	∅160	191	18.0	∅200	193	18.0	□190	196	18.0	∅300	210	18.0
K614	–	–	–	∅160	234	18.0	–	–	–	–	–	–	–	–	–
K713	–	–	–	–	–	–	∅200	221	20.0	□190	224	20.0	∅300	237	20.0
K714	–	–	–	∅160	263	20.0	∅200	283	20.0	–	–	–	–	–	–
K813	–	–	–	–	–	–	∅200	247	24.0	∅250	249	24.0	∅300	262	24.0
K814	–	–	–	–	–	–	∅200	308	24.0	∅250	320	5.0	–	–	–
K913	–	–	–	–	–	–	–	–	–	∅250	294	25.0	∅300	307	25.0
K914	–	–	–	–	–	–	∅200	353	25.0	∅250	365	25.0	–	–	–

Example dimensions for the motor connection

Type	Øb6	Øe6	Ød2max	l5	□a6	c	c6	f6	l7	s6
K_ME10	95^{H7}	115	19	41	100	21	61.0	4.0	3.0	M8
K_ME20	110^{H7}	130	32	53	120	24	74.0	4.0	3.5	M8
K_ME30	130^{H7}	165	38	62	150	26	86.0	5.5	4.5	M10
K_ME40	180^{H7}	215	48	82	204	35	123.0	5.5	5.5	M12
K_ME50	180^{H7}	215	60	86	230	43	124.5	6.0	5.0	M12

In the table above, you will find example dimensions for the motor connection for the ME motor adapter. **Note that when dimension c is lengthened (depending on the motor used), dimensions c6, l5 and lg are also lengthened accordingly.**

You will find additional motor connection dimensions for the ME motor adapter in our STOBER Configurator at http://configurator.stoeber.de. Here, you can directly download a 3D model of your drive.

16.3.12 S shaft design (hollow shaft with shrink ring), NF housing design (foot + round flange)

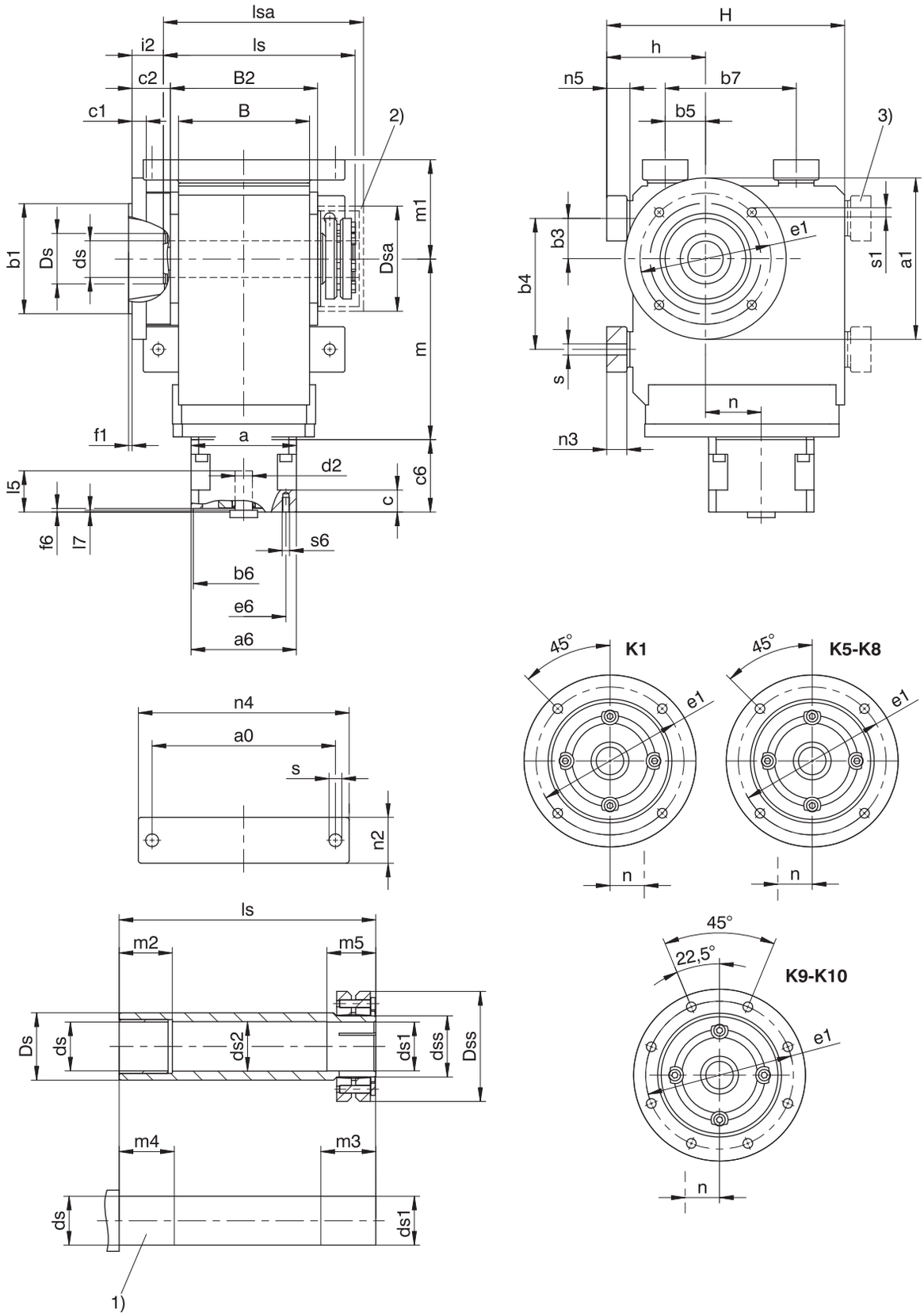

1) Machine shaft: The dimension ls must meet or exceed the specified value.

2) Cover (optional)

3) Only for K1 (other sizes on request)

Dimensions of gear units

Type	a0	Øa1	Øb1	b3	b4	b5	b7	B	B2	c1	c2	Øds	Øds1	Øds2	Ødss	ØDs	ØDsa	ØDss
K1	115	160	110_{j6}	30	90	30	90	90	106	10	32.0	25_{h9}	25_{h9}^{H7}	25.5	30	40	80	60
K5	200	250	180_{j6}	40	140	100	140	160	185	15	39.5	50_{h9}	50_{h9}^{H7}	50.5	62	65	116	106
K6	210	300	230_{j6}	50	160	110	160	168	200	17	36.0	50_{h9}	50_{h9}^{H7}	50.5	62	70	128	106
K7	241	350	250_{h6}	55	180	125	180	190	226	18	44.0	60_{h6}	60_{h6}^{H7}	62.0	75	85	161.5	138
K8	300	400	300_{h6}	75	240	165	240	235	282	20	45.0	70_{h6}	70_{h6}^{H7}	72.0	90	100	193	155
K9	360	450	350_{h6}	95	280	185	280	285	330	23	50.0	90_{h6}	90_{h6}^{H7}	92.0	120	120	244	200
K10	330	550	450_{h6}	115	350	265	420	400	356	25	78.0	100_{h6}	100_{h6}^{H7}	102.0	130	130	274	215

Type	Øe1	f1	h	H	i2	ls	lsa	m1	m2	m3	m4	m5	n2	n3	n4	n5	Øs	Øs1
K1	130	3.5	75	175	25.0	149	163	75	20	34	25	29	30	13	140	15	9.0	9
K5	215	4.0	190	290	32.0	237	254	130	40	44	45	39	60	27	240	30	18.0	14
K6	265	4.0	220	340	28.5	254	276	150	40	45	45	40	65	27	250	30	18.5	14
K7	300	5.0	250	380	36.0	278	314	163	40	45	45	40	70	35	290	38	23.0	18
K8	350	5.0	310	455	36.0	352	378	190	50	60	60	50	85	41	360	45	27.0	18
K9	400	5.0	365	545	40.0	418	428	230	60	70	70	60	95	46	430	50	31.0	18
K10	500	5.0	420	636	51.0	483	497	270	60	80	70	70	120	–	400	45	39.0	18

Dimensions of additional round flanges

Type	Øa1	Øb1	c1	Øe1	f1	Øs1
K1	140	95_{j6}	10	115	3	9
K8	350	250_{h6}	18	300	5	18
K8	450	350_{h6}	20	400	5	18

Type	ME10			ME20			ME30			ME40			ME50		
	a	m	n	a	m	n	a	m	n	a	m	n	a	m	n
K102	□98	124	36.0	□115	128	36.0	–	–	–	–	–	–	–	–	–
K513	–	–	–	∅160	172	15.0	□145	174	15.0	□190	177	15.0	–	–	–
K514	–	–	–	∅160	215	15.0	–	–	–	–	–	–	–	–	–
K613	–	–	–	∅160	191	18.0	∅200	193	18.0	□190	196	18.0	∅300	210	18.0
K614	–	–	–	∅160	234	18.0	–	–	–	–	–	–	–	–	–
K713	–	–	–	–	–	–	∅200	221	20.0	□190	224	20.0	∅300	237	20.0
K714	–	–	–	∅160	263	20.0	∅200	283	20.0	–	–	–	–	–	–
K813	–	–	–	–	–	–	∅200	247	24.0	∅250	249	24.0	∅300	262	24.0
K814	–	–	–	–	–	–	∅200	308	24.0	∅250	320	5.0	–	–	–
K913	–	–	–	–	–	–	–	–	–	∅250	294	25.0	∅300	307	25.0
K914	–	–	–	–	–	–	∅200	353	25.0	∅250	365	25.0	–	–	–
K1013	–	–	–	–	–	–	–	–	–	–	–	–	∅300	392	28.0
K1014	–	–	–	–	–	–	–	–	–	∅250	450	28.0	∅300	475	28.0

Example dimensions for the motor connection

Type	Øb6	Øe6	Ød2max	l5	□a6	c	c6	f6	l7	s6
K_ME10	95^{H7}	115	19	41	100	21	61.0	4.0	3.0	M8
K_ME20	110^{H7}	130	32	53	120	24	74.0	4.0	3.5	M8
K_ME30	130^{H7}	165	38	62	150	26	86.0	5.5	4.5	M10
K_ME40	180^{H7}	215	48	82	204	35	123.0	5.5	5.5	M12
K_ME50	180^{H7}	215	60	86	230	43	124.5	6.0	5.0	M12

In the table above, you will find example dimensions for the motor connection for the ME motor adapter. **Note that when dimension c is lengthened (depending on the motor used), dimensions c6, l5 and lg are also lengthened accordingly.**

You will find additional motor connection dimensions for the ME motor adapter in our STOBER Configurator at http://configurator.stoeber.de. Here, you can directly download a 3D model of your drive.

16.3.13 V shaft design (solid shaft), G housing design (pitch circle diameter)

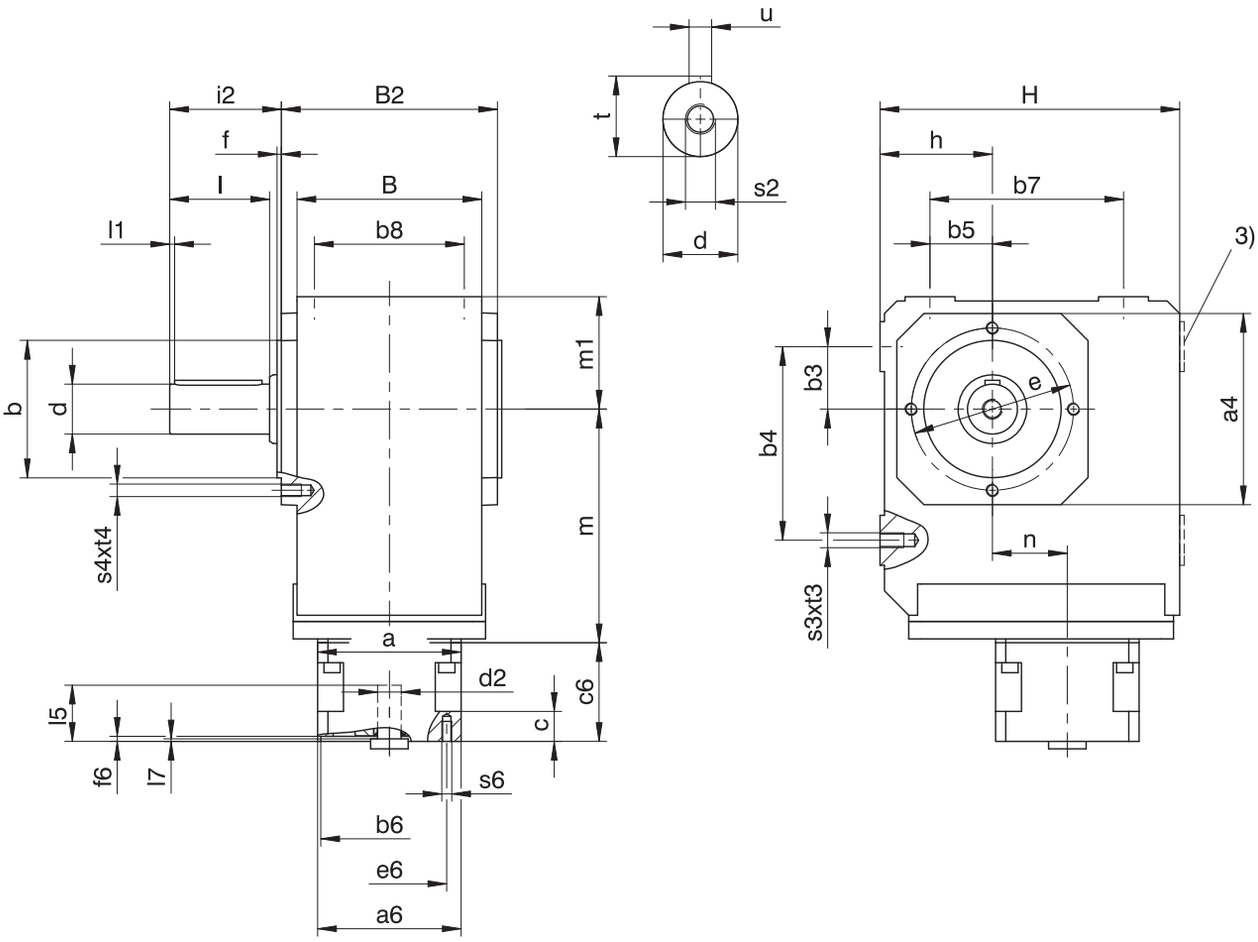

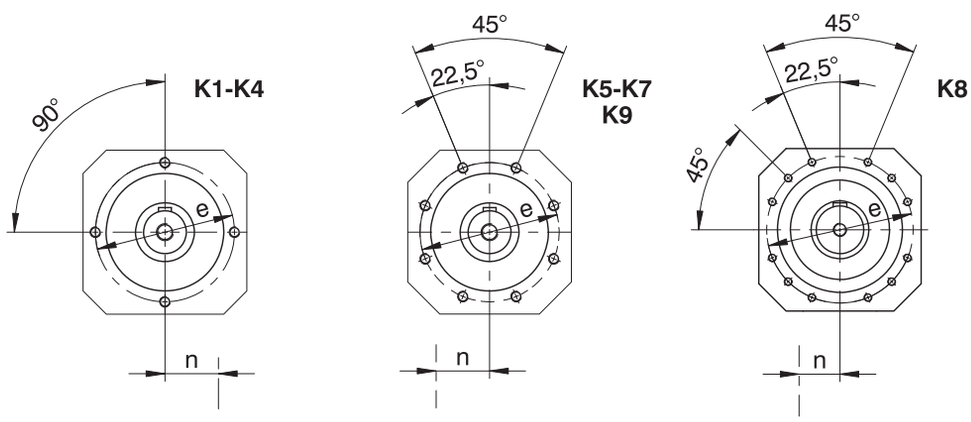

3) Only for K1 (other sizes on request)

– K1 – K9: Solid shaft on both sides available.

– K1 – K4: Solid shaft without feather key available, on request starting at K5.

Dimensions of gear units

Type	□a4	Øb	b3	b4	b5	b7	b8	B	B2	Ød	Øe	f	h	H	i2	l	l1	m1	s2	s3	s4	t	t3	t4	u
K1	105	75_{j6}	30	90	30	90	70	90	106	25_{k6}	90	3.0	60	160	62.0	50	4	60	M10	M8	M8	28.0	13	13	A8×7×40
K2	116	82_{j6}	35	115	35	115	90	115	134	30_{k6}	100	3.0	65	190	68.0	60	4	65	M10	M10	M8	33.0	16	13	A8×7×50
K3	132	95_{j6}	40	130	40	130	105	130	146	30_{k6}	115	3.0	75	213	69.0	60	4	75	M10	M10	M8	33.0	16	13	A8×7×50
K4	152	110_{j6}	50	155	50	155	120	148	173	40_{k6}	130	3.5	90	240	89.5	80	4	90	M16	M12	M10	43.0	19	16	A12×8×70
K5	145	110_{j6}	40	140	100	140	125	160	185	45_{k6}	130	3.5	160	260	129.5	90	4	100	M16	M16	M10	48.5	26	16	A14×9×80
K6	180	140_{j6}	50	160	110	160	130	168	200	50_{k6}	165	3.5	190	310	136.0	100	4	120	M16	M16	M10	53.5	26	16	A14×9×90
K7	195	155_{j6}	55	180	125	180	145	190	226	60_{m6}	185	3.5	212	342	164.0	120	4	125	M20	M20	M12	64.0	33	19	A18×11×110
K8	226	185_{j6}	75	240	165	240	185	235	282	70_{m6}	215	4.0	265	410	185.0	140	5	145	M20	M24	M12	74.5	38	19	A20×12×125
K9	280	230_{j6}	95	280	185	280	225	285	330	90_{m6}	265	5.0	315	495	220.0	170	8	180	M24	M30	M16	95.0	48	26	A25×14×140

Type	ME10			ME20			ME30			ME40			ME50		
	a	m	n	a	m	n	a	m	n	a	m	n	a	m	n
K102	□98	124	36.0	□115	128	36.0	–	–	–	–	–	–	–	–	–
K202	□98	143	46.0	□115	147	46.0	□145	149	46.0	–	–	–	–	–	–
K203	∅140	180	46.0	–	–	–	–	–	–	–	–	–	–	–	–
K302	∅140	163	52.5	□115	167	52.5	□145	169	52.5	–	–	–	–	–	–
K303	∅140	200	52.5	∅160	210	16.0	–	–	–	–	–	–	–	–	–
K402	–	–	–	∅160	187	60.0	□145	189	60.0	□190	192	60.0	–	–	–
K403	∅140	220	60.0	∅160	230	23.0	–	–	–	–	–	–	–	–	–
K513	–	–	–	∅160	172	15.0	□145	174	15.0	□190	177	15.0	–	–	–
K514	–	–	–	∅160	215	15.0	–	–	–	–	–	–	–	–	–
K613	–	–	–	∅160	191	18.0	∅200	193	18.0	□190	196	18.0	∅300	210	18.0
K614	–	–	–	∅160	234	18.0	–	–	–	–	–	–	–	–	–
K713	–	–	–	–	–	–	∅200	221	20.0	□190	224	20.0	∅300	237	20.0
K714	–	–	–	∅160	263	20.0	∅200	283	20.0	–	–	–	–	–	–
K813	–	–	–	–	–	–	∅200	247	24.0	∅250	249	24.0	∅300	262	24.0
K814	–	–	–	–	–	–	∅200	308	24.0	∅250	320	5.0	–	–	–
K913	–	–	–	–	–	–	–	–	–	∅250	294	25.0	∅300	307	25.0
K914	–	–	–	–	–	–	∅200	353	25.0	∅250	365	25.0	–	–	–

Example dimensions for the motor connection

Type	Øb6	Øe6	Ød2max	l5	□a6	c	c6	f6	l7	s6
K_ME10	95^{H7}	115	19	41	100	21	61.0	4.0	3.0	M8
K_ME20	110^{H7}	130	32	53	120	24	74.0	4.0	3.5	M8
K_ME30	130^{H7}	165	38	62	150	26	86.0	5.5	4.5	M10
K_ME40	180^{H7}	215	48	82	204	35	123.0	5.5	5.5	M12
K_ME50	180^{H7}	215	60	86	230	43	124.5	6.0	5.0	M12

In the table above, you will find example dimensions for the motor connection for the ME motor adapter. **Note that when dimension c is lengthened (depending on the motor used), dimensions c6, l5 and lg are also lengthened accordingly.**

You will find additional motor connection dimensions for the ME motor adapter in our STOBER Configurator at http://configurator.stoeber.de. Here, you can directly download a 3D model of your drive.

16.3.14 V shaft design (solid shaft), NG housing design (foot + pitch circle diameter)

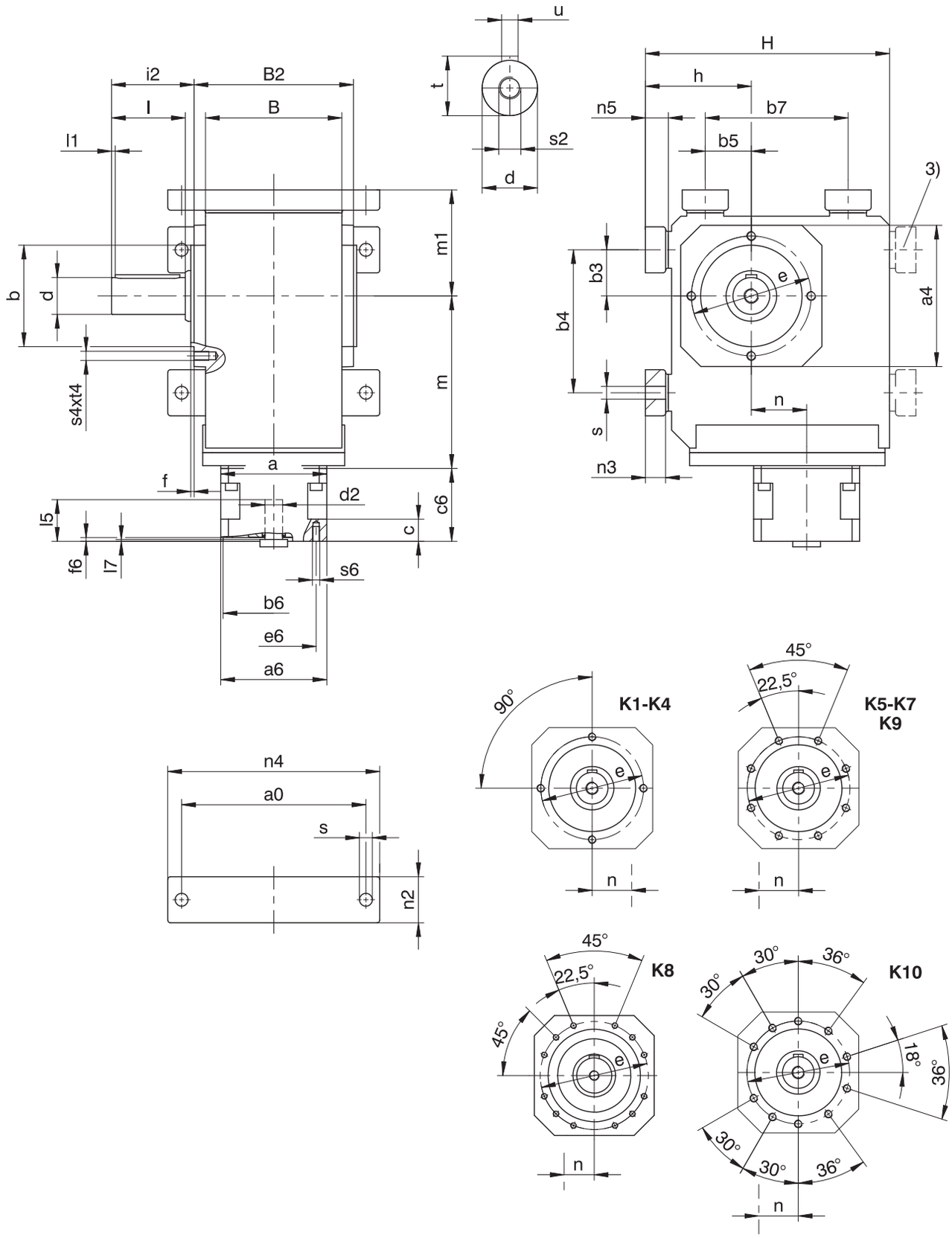

3) Only for K1 (other sizes on request)

– K1 – K10: Solid shaft on both sides available.

– K1 – K4: Solid shaft without feather key available, on request starting at K5.

Dimensions of gear units

Type	a0	□a4	Øb	b3	b4	b5	b7	B	B2	Ød	Øe	f	h	H	i2	l	l1	m1	n2	n3	n4	n5	Øs	s2	s4	t	t4	u
K1	115	105	75_{j6}	30	90	30	90	90	106	25_{k6}	90	3.0	75	175	62.0	50	4	75	30	13	140	15	9.0	M10	M8	28.0	13	A8×7×40
K2	155	116	82_{j6}	35	115	35	115	115	134	30_{k6}	100	3.0	88	213	68.0	60	4	88	40	20	185	23	11.0	M10	M8	33.0	13	A8×7×50
K3	170	132	95_{j6}	40	130	40	130	130	146	30_{k6}	115	3.0	98	236	69.0	60	4	98	45	20	200	23	11.0	M10	M8	33.0	13	A8×7×50
K4	200	152	110_{j6}	50	155	50	155	148	173	40_{k6}	130	3.5	115	265	89.5	80	4	115	50	22	230	25	14.0	M16	M10	43.0	16	A12×8×70
K5	200	145	110_{j6}	40	140	100	140	160	185	45_{k6}	130	3.5	190	290	129.5	90	4	130	60	27	240	30	18.0	M16	M10	48.5	16	A14×9×80
K6	210	180	140_{j6}	50	160	110	160	168	200	50_{k6}	165	3.5	220	340	136.0	100	4	150	65	27	250	30	18.5	M16	M10	53.5	16	A14×9×90
K7	241	195	155_{j6}	55	180	125	180	190	226	60_{m6}	185	3.5	250	380	164.0	120	4	163	70	35	290	38	23.0	M20	M12	64.0	19	A18×11×110
K8	300	226	185_{j6}	75	240	165	240	235	282	70_{m6}	215	4.0	310	455	185.0	140	5	190	85	41	360	45	27.0	M20	M12	74.5	19	A20×12×125
K9	360	280	230_{j6}	95	280	185	280	285	330	90_{m6}	265	5.0	365	545	220.0	170	8	230	95	46	430	50	31.0	M24	M16	95.0	26	A25×14×140
K10	330	340	250_{h6}	115	350	265	420	400	356	110_{m6}	300	20.0	420	636	240.0	210	15	270	120	–	400	45	39.0	M24	M20	116.0	33	A28×16×180

Type	ME10			ME20			ME30			ME40			ME50		
	a	m	n	a	m	n	a	m	n	a	m	n	a	m	n
K102	□98	124	36.0	□115	128	36.0	–	–	–	–	–	–	–	–	–
K202	□98	143	46.0	□115	147	46.0	□145	149	46.0	–	–	–	–	–	–
K203	∅140	180	46.0	–	–	–	–	–	–	–	–	–	–	–	–
K302	∅140	163	52.5	□115	167	52.5	□145	169	52.5	–	–	–	–	–	–
K303	∅140	200	52.5	∅160	210	16.0	–	–	–	–	–	–	–	–	–
K402	–	–	–	∅160	187	60.0	□145	189	60.0	□190	192	60.0	–	–	–
K403	∅140	220	60.0	∅160	230	23.0	–	–	–	–	–	–	–	–	–
K513	–	–	–	∅160	172	15.0	□145	174	15.0	□190	177	15.0	–	–	–
K514	–	–	–	∅160	215	15.0	–	–	–	–	–	–	–	–	–
K613	–	–	–	∅160	191	18.0	∅200	193	18.0	□190	196	18.0	∅300	210	18.0
K614	–	–	–	∅160	234	18.0	–	–	–	–	–	–	–	–	–
K713	–	–	–	–	–	–	∅200	221	20.0	□190	224	20.0	∅300	237	20.0
K714	–	–	–	∅160	263	20.0	∅200	283	20.0	–	–	–	–	–	–
K813	–	–	–	–	–	–	∅200	247	24.0	∅250	249	24.0	∅300	262	24.0
K814	–	–	–	–	–	–	∅200	308	24.0	∅250	320	5.0	–	–	–
K913	–	–	–	–	–	–	–	–	–	∅250	294	25.0	∅300	307	25.0
K914	–	–	–	–	–	–	∅200	353	25.0	∅250	365	25.0	–	–	–
K1013	–	–	–	–	–	–	–	–	–	–	–	–	∅300	392	28.0
K1014	–	–	–	–	–	–	–	–	–	∅250	450	28.0	∅300	475	28.0

Example dimensions for the motor connection

Type	Øb6	Øe6	Ød2max	l5	□a6	c	c6	f6	l7	s6
K_ME10	95^{H7}	115	19	41	100	21	61.0	4.0	3.0	M8
K_ME20	110^{H7}	130	32	53	120	24	74.0	4.0	3.5	M8
K_ME30	130^{H7}	165	38	62	150	26	86.0	5.5	4.5	M10
K_ME40	180^{H7}	215	48	82	204	35	123.0	5.5	5.5	M12
K_ME50	180^{H7}	215	60	86	230	43	124.5	6.0	5.0	M12

In the table above, you will find example dimensions for the motor connection for the ME motor adapter. **Note that when dimension c is lengthened (depending on the motor used), dimensions c6, l5 and lg are also lengthened accordingly.**

You will find additional motor connection dimensions for the ME motor adapter in our STOBER Configurator at http://configurator.stoeber.de. Here, you can directly download a 3D model of your drive.

16.3.15 V shaft design (solid shaft), F housing design (round flange)

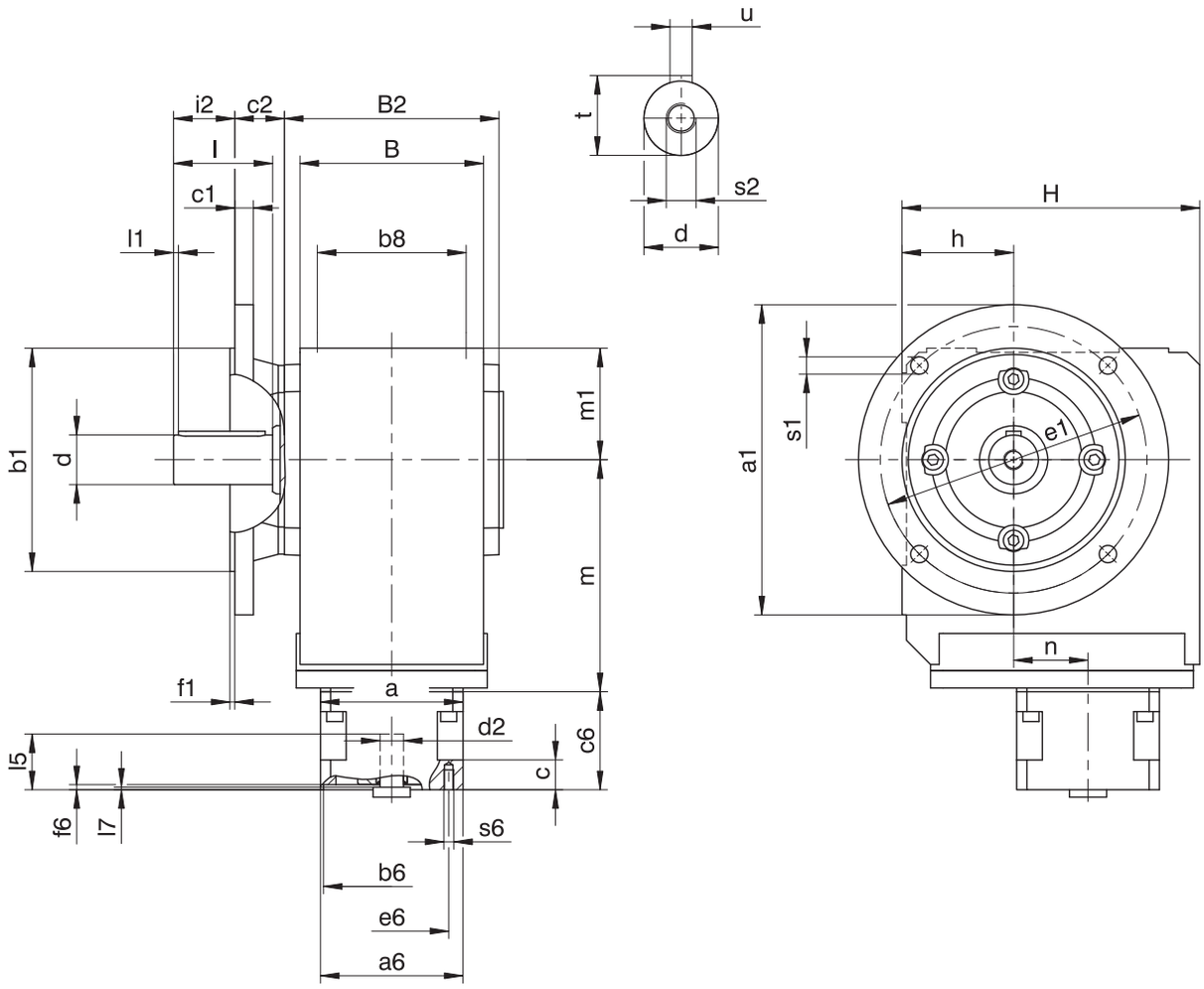

K1-K4

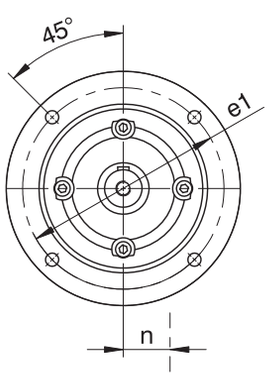

K5-K8

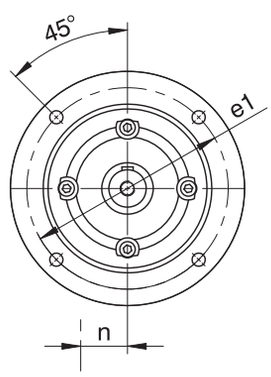

K9

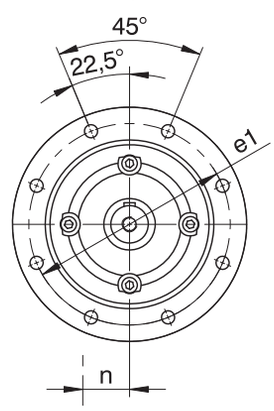

- K1 – K4: Solid shaft without feather key available, on request starting at K5.
- K1 – K9: Solid shaft on both sides available.

Dimensions of gear units

Type	Øa1	Øb1	b8	B	B2	c1	c2	Ød	Øe1	f1	h	H	i2	l	l1	m1	Øs1	s2	t	u
K1	160	110_{j6}	70	90	106	10	32.0	25_{k6}	130	3.5	60	160	30.0	50	4	60	9	M10	28.0	A8×7×40
K2	200	130_{j6}	90	115	134	12	32.0	30_{k6}	165	3.5	65	190	36.0	60	4	65	11	M10	33.0	A8×7×50
K3	200	130_{j6}	105	130	146	14	38.0	30_{k6}	165	3.5	75	213	31.0	60	4	75	11	M10	33.0	A8×7×50
K4	250	180_{j6}	120	148	173	15	40.0	40_{k6}	215	4.0	90	240	49.5	80	4	90	14	M16	43.0	A12×8×70
K5	250	180_{j6}	125	160	185	15	39.5	45_{k6}	215	4.0	160	260	90.0	90	4	100	14	M16	48.5	A14×9×80
K6	300	230_{j6}	130	168	200	17	36.0	50_{k6}	265	4.0	190	310	100.0	100	4	120	14	M16	53.5	A14×9×90
K7	350	250_{h6}	145	190	226	18	44.0	60_{m6}	300	5.0	212	342	120.0	120	4	125	18	M20	64.0	A18×11×110
K8	400	300_{h6}	185	235	282	20	45.0	70_{m6}	350	5.0	265	410	140.0	140	5	145	18	M20	74.5	A20×12×125
K9	450	350_{h6}	225	285	330	23	50.0	90_{m6}	400	5.0	315	495	170.0	170	8	180	18	M24	95.0	A25×14×140

Dimensions of additional round flanges

Type	Øa1	Øb1	c1	Øe1	f1	Øs1
K1	140	95_{j6}	10	115	3.0	9
K2	160	110_{j6}	12	130	3.5	9
K3	160	110_{j6}	14	130	3.5	9
K3	250	180_{j6}	14	215	4.0	14
K8	350	250_{h6}	18	300	5.0	18
K8	450	350_{h6}	20	400	5.0	18

Type	ME10			ME20			ME30			ME40			ME50		
	a	m	n	a	m	n	a	m	n	a	m	n	a	m	n
K102	□98	124	36.0	□115	128	36.0	–	–	–	–	–	–	–	–	–
K202	□98	143	46.0	□115	147	46.0	□145	149	46.0	–	–	–	–	–	–
K203	∅140	180	46.0	–	–	–	–	–	–	–	–	–	–	–	–
K302	∅140	163	52.5	□115	167	52.5	□145	169	52.5	–	–	–	–	–	–
K303	∅140	200	52.5	∅160	210	16.0	–	–	–	–	–	–	–	–	–
K402	–	–	–	∅160	187	60.0	□145	189	60.0	□190	192	60.0	–	–	–
K403	∅140	220	60.0	∅160	230	23.0	–	–	–	–	–	–	–	–	–
K513	–	–	–	∅160	172	15.0	□145	174	15.0	□190	177	15.0	–	–	–
K514	–	–	–	∅160	215	15.0	–	–	–	–	–	–	–	–	–
K613	–	–	–	∅160	191	18.0	∅200	193	18.0	□190	196	18.0	∅300	210	18.0
K614	–	–	–	∅160	234	18.0	–	–	–	–	–	–	–	–	–
K713	–	–	–	–	–	–	∅200	221	20.0	□190	224	20.0	∅300	237	20.0
K714	–	–	–	∅160	263	20.0	∅200	283	20.0	–	–	–	–	–	–
K813	–	–	–	–	–	–	∅200	247	24.0	∅250	249	24.0	∅300	262	24.0
K814	–	–	–	–	–	–	∅200	308	24.0	∅250	320	5.0	–	–	–
K913	–	–	–	–	–	–	–	–	–	∅250	294	25.0	∅300	307	25.0
K914	–	–	–	–	–	–	∅200	353	25.0	∅250	365	25.0	–	–	–

Example dimensions for the motor connection

Type	Øb6	Øe6	Ød2max	l5	□a6	c	c6	f6	l7	s6
K_ME10	95^{H7}	115	19	41	100	21	61.0	4.0	3.0	M8
K_ME20	110^{H7}	130	32	53	120	24	74.0	4.0	3.5	M8
K_ME30	130^{H7}	165	38	62	150	26	86.0	5.5	4.5	M10
K_ME40	180^{H7}	215	48	82	204	35	123.0	5.5	5.5	M12
K_ME50	180^{H7}	215	60	86	230	43	124.5	6.0	5.0	M12

In the table above, you will find example dimensions for the motor connection for the ME motor adapter. **Note that when dimension c is lengthened (depending on the motor used), dimensions c6, l5 and lg are also lengthened accordingly.**

You will find additional motor connection dimensions for the ME motor adapter in our STOBER Configurator at http://configurator.stoeber.de. Here, you can directly download a 3D model of your drive.

16.3.16 V shaft design (solid shaft), NF housing design (foot + round flange)

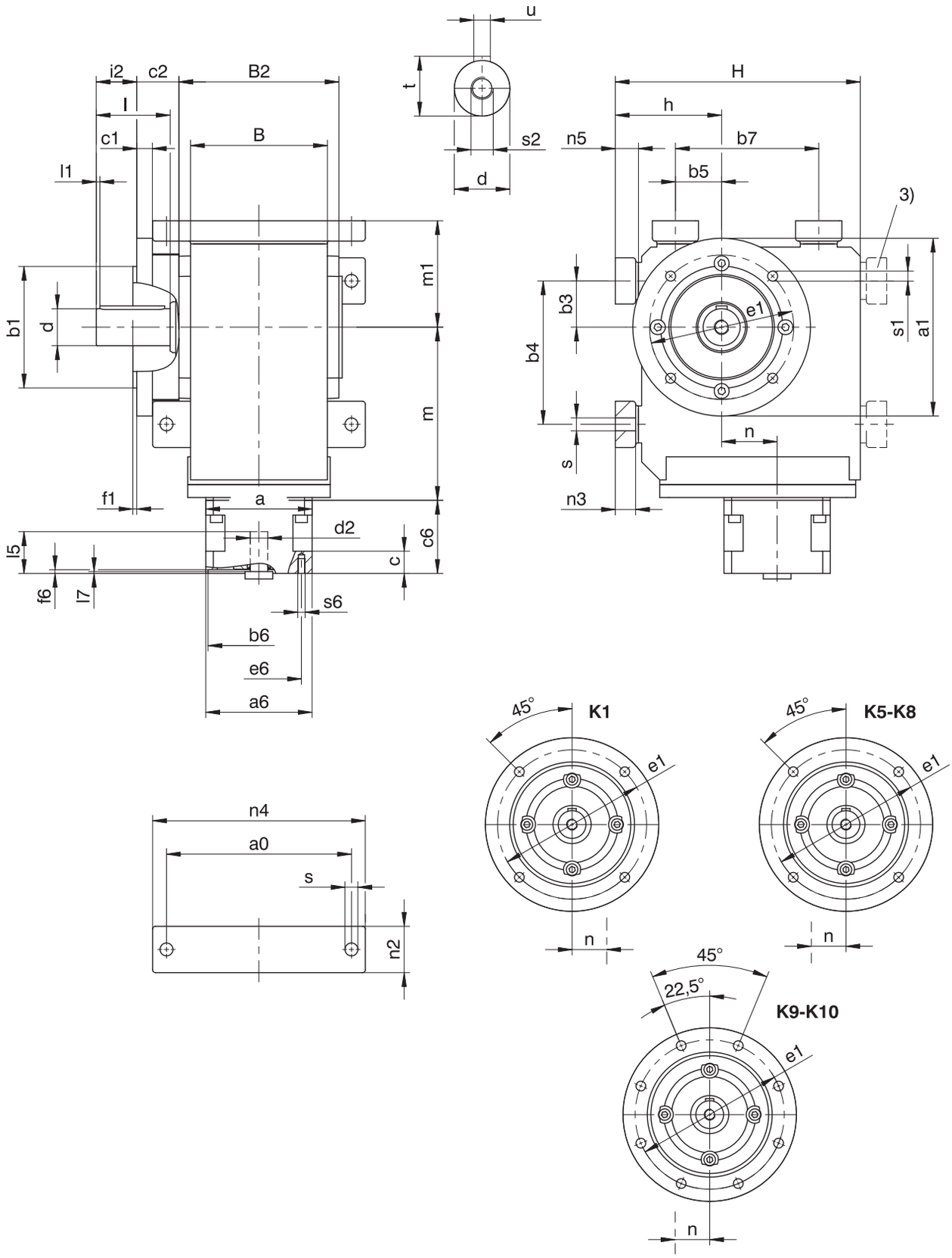

3) Only for K1 (other sizes on request)

– K1 – K10: Solid shaft on both sides available.

– K1 – K4: Solid shaft without feather key available, on request starting at K5.

Dimensions of gear units

Type	a0	Øa1	Øb1	b3	b4	b5	b7	B	B2	c1	c2	Ød	Øe1	f1	h	H	i2	l	l1	m1	n2	n3	n4	n5	Øs	Øs1	s2	t	u
K1	115	160	110_{j6}	30	90	30	90	90	106	10	32.0	25_{k6}	130	3.5	75	175	30.0	50	4	75	30	13	140	15	9.0	9	M10	28.0	A8×7×40
K5	200	250	180_{j6}	40	140	100	140	160	185	15	39.5	45_{k6}	215	4.0	190	290	90.0	90	4	130	60	27	240	30	18.0	14	M16	48.5	A14×9×80
K6	210	300	230_{j6}	50	160	110	160	168	200	17	36.0	50_{k6}	265	4.0	220	340	100.0	100	4	150	65	27	250	30	18.5	14	M16	53.5	A14×9×90
K7	241	350	250_{h6}	55	180	125	180	190	226	18	44.0	60_{m6}	300	5.0	250	380	120.0	120	4	163	70	35	290	38	23.0	18	M20	64.0	A18×11×110
K8	300	400	300_{h6}	75	240	165	240	235	282	20	45.0	70_{m6}	350	5.0	310	455	140.0	140	5	190	85	41	360	45	27.0	18	M20	74.5	A20×12×125
K9	360	450	350_{h6}	95	280	185	280	285	330	23	50.0	90_{m6}	400	5.0	365	545	170.0	170	8	230	95	46	430	50	31.0	18	M24	95.0	A25×14×140
K10	330	550	450_{h6}	115	350	265	420	400	356	25	78.0	110_{m6}	500	5.0	420	636	210.0	210	15	270	120	–	400	45	39.0	18	M24	116.0	A28×16×180

Dimensions of additional round flanges

Type	Øa1	Øb1	c1	Øe1	f1	Øs1
K1	140	95_{j6}	10	115	3	9
K8	350	250_{h6}	18	300	5	18
K8	450	350_{h6}	20	400	5	18

Type	ME10			ME20			ME30			ME40			ME50		
	a	m	n	a	m	n	a	m	n	a	m	n	a	m	n
K102	□98	124	36.0	□115	128	36.0	–	–	–	–	–	–	–	–	–
K513	–	–	–	∅160	172	15.0	□145	174	15.0	□190	177	15.0	–	–	–
K514	–	–	–	∅160	215	15.0	–	–	–	–	–	–	–	–	–
K613	–	–	–	∅160	191	18.0	∅200	193	18.0	□190	196	18.0	∅300	210	18.0
K614	–	–	–	∅160	234	18.0	–	–	–	–	–	–	–	–	–
K713	–	–	–	–	–	–	∅200	221	20.0	□190	224	20.0	∅300	237	20.0
K714	–	–	–	∅160	263	20.0	∅200	283	20.0	–	–	–	–	–	–
K813	–	–	–	–	–	–	∅200	247	24.0	∅250	249	24.0	∅300	262	24.0
K814	–	–	–	–	–	–	∅200	308	24.0	∅250	320	5.0	–	–	–
K913	–	–	–	–	–	–	–	–	–	∅250	294	25.0	∅300	307	25.0
K914	–	–	–	–	–	–	∅200	353	25.0	∅250	365	25.0	–	–	–
K1013	–	–	–	–	–	–	–	–	–	–	–	–	∅300	392	28.0
K1014	–	–	–	–	–	–	–	–	–	∅250	450	28.0	∅300	475	28.0

Example dimensions for the motor connection

Type	Øb6	Øe6	Ød2max	l5	□a6	c	c6	f6	l7	s6
K_ME10	95^{H7}	115	19	41	100	21	61.0	4.0	3.0	M8
K_ME20	110^{H7}	130	32	53	120	24	74.0	4.0	3.5	M8
K_ME30	130^{H7}	165	38	62	150	26	86.0	5.5	4.5	M10
K_ME40	180^{H7}	215	48	82	204	35	123.0	5.5	5.5	M12
K_ME50	180^{H7}	215	60	86	230	43	124.5	6.0	5.0	M12

In the table above, you will find example dimensions for the motor connection for the ME motor adapter. **Note that when dimension c is lengthened (depending on the motor used), dimensions c6, l5 and lg are also lengthened accordingly.**

You will find additional motor connection dimensions for the ME motor adapter in our STOBER Configurator at http://configurator.stoeber.de. Here, you can directly download a 3D model of your drive.

16.3.17 Oil expansion tank

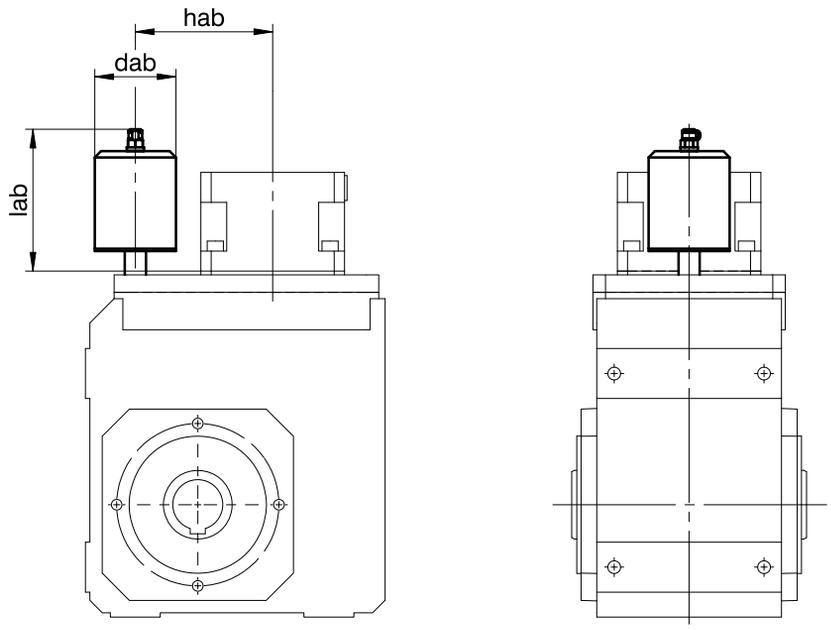

Dimensions

Type	ME20			ME30			ME40			ME50		
	dab	hab	lab	dab	hab	lab	dab	hab	lab	dab	hab	lab
K513	65	122.0	113.5	65	122.0	113.5	65	170.0	163.5	–	–	–
K613	65	148.5	116.5	65	148.5	116.5	65	150.5	111.5	65	194.5	191.0
K713	–	–	–	65	170.0	114.5	65	170.0	112.0	65	214.0	191.5
K813	–	–	–	73	205.0	129.5	73	205.0	129.5	73	205.0	129.5
K913	–	–	–	–	–	–	73	255.0	129.5	73	255.0	129.5

More information can be found in the chapter [▶ 16.6.5]

16.4 Type designation

This chapter shows you an explanation of the type designation with the associated options.

Additional ordering information not included in the type designation can be found at the end of the chapter.

Example code

K	4	0	2	A	G	0560	ME20

Explanation

Code	Designation	Design
K	Type	Helical bevel gear unit
4	Size	4 (example)
0	Generation	Generation 0
1		Generation 1
2	Stages	Two-stage
3		Three-stage
4		Four-stage
A	Shaft	Hollow shaft with keyway
S		Hollow shaft with shrink ring
V		Solid shaft
G	Housing	Pitch circle diameter
F		Round flange
NG		Foot + pitch circle diameter
NF		Foot + round flange
GD		Pitch circle diameter + torque arm bracket
NGD		Foot + pitch circle diameter + torque arm bracket
0560	Transmission ratio (i x 10 rounded)	i = 55.71 (example)
ME20	Motor adapter	ME20 motor adapter (example)
		with EasyAdapt coupling
MQ		Square motor adapter
		with backlash-free plug-in coupling
MB[1]		ServoStop motor adapter with brake

In order to complete the type designation, also specify:

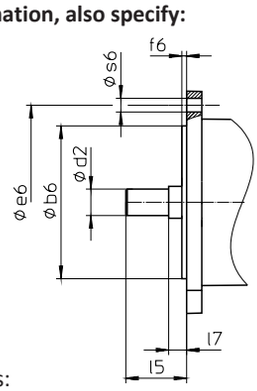

- Motor type or motor dimensions:

  To choose a suitable motor connection, use the STOBER Configurator at http://configurator.stoeber.de and choose your motor or the dimensions of the motor connection.
- For the mounting position, see the chapter [▶ 16.5.7]
- The position of locking screw access, see the chapter [▶ 16.5.9]
- Attachment of solid shaft: gear unit side 3 or 4; solid shaft on both sides
- Attachment of hollow shaft with keyway: entry side 3 or 4
- Attachment of hollow shaft with shrink ring: shrink ring on gear unit side 3 or 4
- Attachment of foot plates: gear unit side 1 or 5 (for K1, also on gear side 2)
- Attachment of flange: gear unit side 3 or 4
- Pitch circle diameter: gear unit side 3 or 4
- Attachment of torque arm bracket: torque arm bracket on gear unit side 1 or 5 (for K1, also on gear unit side 2), eye on gear unit side 3 or 4

[1] You can find more details in the catalog for ServoStop servo gear unit with brake ID 443234.

- Oil expansion tank (recommended for gear units in mounting position EL5), see the chapter [▶ 16.6.5]
- Backlash: Standard/class II/class I. Backlash class II and class I for an additional charge.
- K102, K202, K302, K402, K513, K613, K713, K813, K913: Pinion lock for motor adapter (option)
- Double seal for ME motor adapter (optional)

An explanation of the gear unit sides can be found in the chapter [▶ 16.5.7].

16.4.1 Nameplate

An example gear unit nameplate is explained in the figure below.

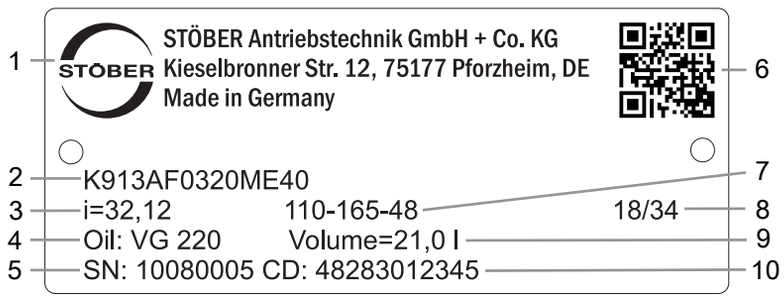

Code	Designation
1	Name of manufacturer
2	Type designation
3	Gear ratio of the gear unit
4	Lubricant specification
5	Serial number of the gear unit
6	QR code (link to product information)
7	Dimensions of the motor adapter (pilot/bolt circle/motor shaft diameter)
8	Date of manufacture (year/calendar week)
9	Lubricant fill volume
10	Customer-specific data

16.4.1.1 Supporting documents

You can view or download supporting documents for the product by reading off the serial number on the nameplate of the product and entering it at the following address online:
https://id.stober.com

Alternatively, you can use a suitable mobile device to scan in the QR code on the nameplate of the product in order to be linked to the supporting documents.

16.5 Product description

16.5.1 Input options

ME motor adapter for attaching synchronous servo motors

http://www.stoeber.de/en/KME

MB motor adapter with brake for attaching synchronous servo motors

http://www.stoeber.de/en/KMB

MR motor adapter for attaching asynchronous motors

http://www.stoeber.de/en/KMR

EZ synchronous servo motor

http://www.stoeber.de/en/KEZ

LM Lean motor

http://www.stoeber.de/en/KLM

16.5.2 Motor adapter with EasyAdapt coupling (ME)

In this chapter, you will find a description of the EasyAdapt coupling.

Properties:

- Fast and easy motor attachment
- Rugged clamp coupling with expanding function
- Lowest mass moments of inertia for the highest dynamics
- Balanced for smooth running without vibration, even at high speeds
- Large motor shaft diameter range
- Error-free, thanks to exact centering of the motor

Fig. 1: EasyAdapt coupling

16.5.3 Square motor adapter with backlash-free plug-in coupling (MQ)

In this chapter, you will find a description of the backlash-free plug-in coupling (jaw coupling).

Properties:

- Fast and easy motor attachment
- Removal of the motor possible in any position
- With integrated thermal length compensation, compensates for linear expansion of the motor shaft
- Motor shaft decoupled from axial forces
- Balanced for smooth running without vibration, even at high speeds
- Large motor shaft diameter range
- Error-free, thanks to exact centering of the motor

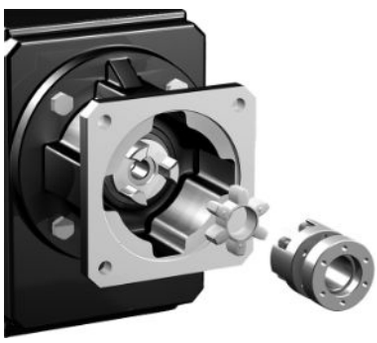

Fig. 2: Backlash-free plug-in coupling

For all technical data and combinations with our gear units, refer to http://configurator.stoeber.de.

16.5.4 Housing design

Pitch circle diameter G	Round flange F
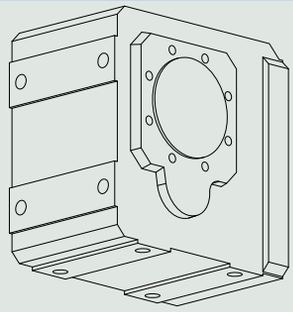	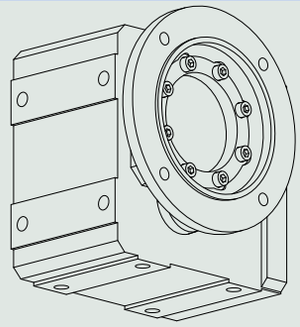

Foot + pitch circle diameter NG	Foot + round flange NF
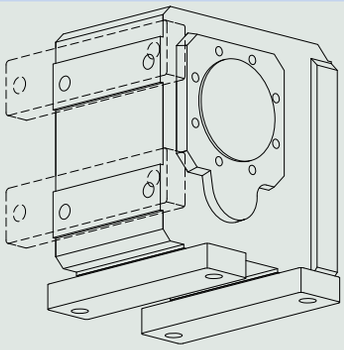	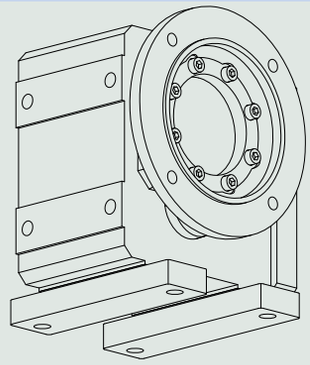

Pitch circle diameter + torque arm bracket GD	Foot + pitch circle diameter + torque arm bracket NGD
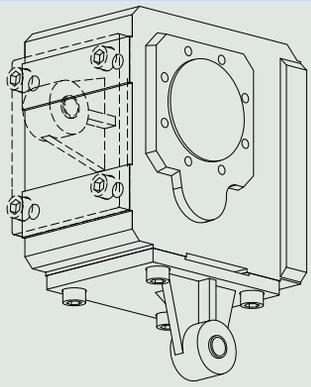	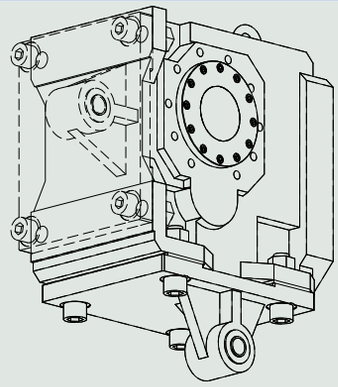

	G	F	NG	NF	GD	NGD
K1	✓	✓	✓	✓	✓	–
K2	✓	✓	✓	–	✓	–
K3	✓	✓	✓	–	✓	–
K4	✓	✓	✓	–	✓	–
K5	✓	✓	✓	✓	✓	–
K6	✓	✓	✓	✓	✓	–
K7	✓	✓	✓	✓	✓	–
K8	✓	✓	✓	✓	✓	–
K9	✓	✓	✓	✓	✓	–
K10	–	–	✓	✓	–	✓

16.5.5 Combinatorial shaft/housing design

	Housing design						
Shaft design	**Code**	**G**	**F**	**NG**	**NF**	**GD**	**NGD**
Hollow shaft with keyway	**A**	AG	AF	ANG	ANF	AGD	ANGD
Hollow shaft with shrink ring	**S**	SG	SF	SNG	SNF	SGD	SNGD
Solid shaft [1)]	**V**	VG	VF	VNG	VNF	–	–

[1)] Gear units in sizes K1 – K10 come with a solid shaft with feather key as standard. Gear units in sizes K1 – K4 can be ordered with the option of a solid shaft without feather key. Only upon request starting at size K5.

16.5.6 Installation conditions

Hollow shaft

The hollow shaft hole tolerance is ISO H7. The tolerance of the machine shaft must be ISO k6.

Take care to align the machine shaft with the gear unit hollow shaft when attaching the gear unit.

Maximum deviation ≤ 0.03 mm.

For simpler assembly and disassembly of the machine shaft, the hollow shafts are equipped with a spiral groove (as a grease deposit).

A hardened, threaded keeper plate is included in the scope of delivery. You also have the option to order the hollow shaft without a keeper plate.

Hollow shaft with shrink ring

The tolerance of the hollow shaft hole is ISO H7.

The machine shaft must be executed as follows:

Gear unit type	Tolerance
K1 to K6	ISO h9
K7 to K10	ISO h6

Select a material for the machine shaft with a permitted surface pressure of $p \geq 325\ N/mm^2$.

Possible materials:

- C45E +QT
- 42CrMo4

Fastening the gear units on the machine side using the pitch circle diameter

The specified torques and forces only apply when gear units are fastened on the machine side using screws of strength class 10.9. In addition, the gear housings must be adjusted at the pilot. The machine-side fit must be H7.

16.5.7 Mounting positions

The following table shows the standard mounting positions.

The numbers identify the gear unit sides. The mounting position is defined by the gear side facing downwards.

Mounting positions for gear unit sizes K1 – K4

EL1	EL2	EL3
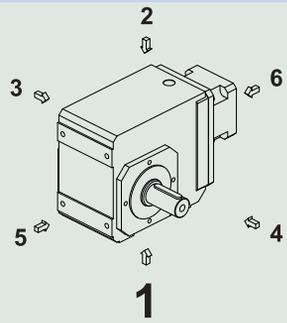	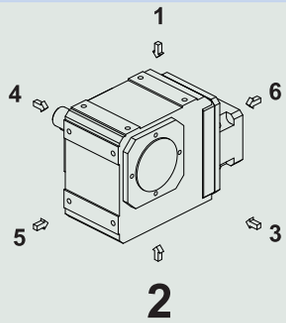	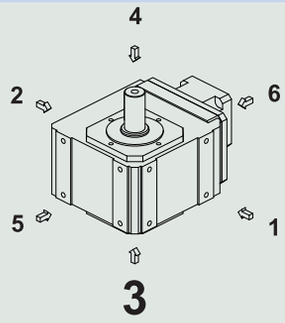
EL4	**EL5**	**EL6**
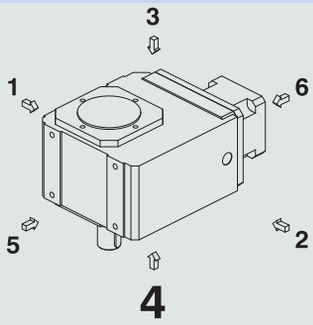	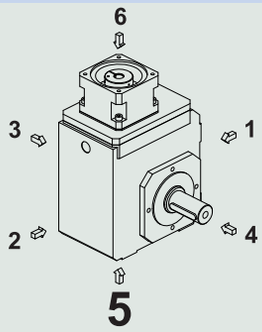	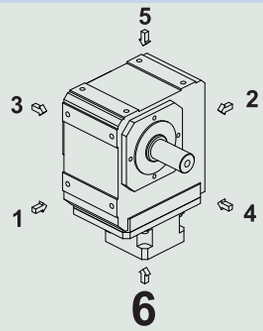

Mounting positions for gear unit sizes K5 – K10

EL1	EL2	EL3
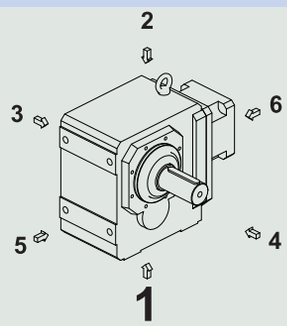	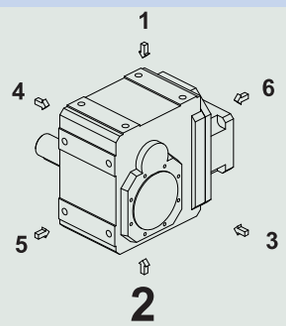	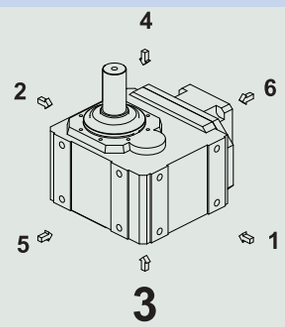
EL4	**EL5**	**EL6**
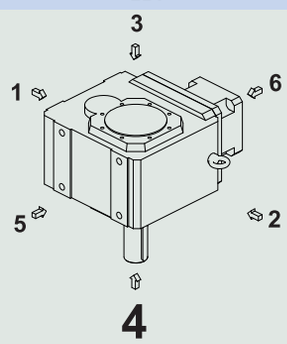	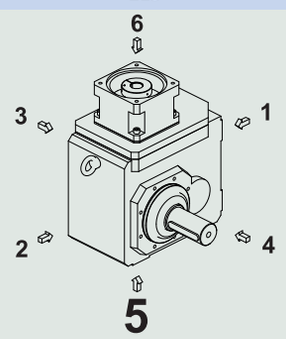	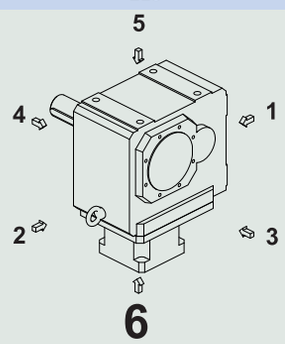

Since the lubricant filling volume of the gear unit depends on the mounting position, the mounting position must be specified when ordering.

16.5.8 Lubricants

STOBER fills the gear units with the amount and type of lubricant specified on the nameplate. The filling volume and the structure of the gear units depend on the mounting position.

Only install the gear units in the intended mounting position! Reposition the gear units only after consulting STOBER. Otherwise, STOBER assumes no liability for the gear units.

You will receive lubricants for use in the food industry upon request.

16.5.9 Position of locking screw access

Mounting position EL1	Mounting position EL4
Locking screw in 270° position (standard)	Locking screw in 270° position (standard)
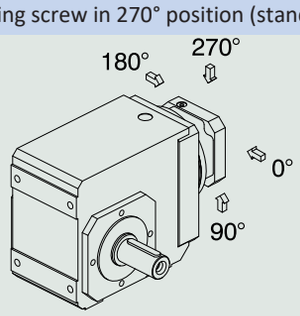	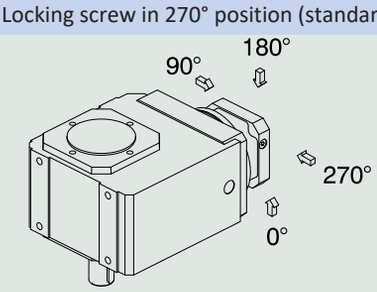

Indicate variations for your gear unit in the order.

Note that the access hole for the locking screw also rotates when the gear unit is rotated to another mounting position.

16.5.10 Other product features

Feature	Value
Max. permitted gear unit temperature (on the surface of the gear unit)	≤ 80 °C
Paint	Black RAL 9005
Explosion-proof design in accordance with (ATEX) Directive 2014/34/EU (optional)	Available, see Document ID 441677_en
Efficiency:	
η_{get} two-stage	97%
η_{get} three-stage	96%
η_{get} four-stage	94%
Protection class: [2]	IP65

16.5.11 Maintenance

The instructions for maintenance can be found in the operating manual, ID 443027_en, at http://www.stoeber.de/en/downloads/. Enter the ID of the documentation in the Search... field.

Ventilation

Air release valves are fitted as a standard feature and independently of installation position for gear unit sizes K5 to K10.

For the position and dimensions of the air release valve, refer to the 3D model.

Download the 3D model at http://configurator.stoeber.de.

[2] Observe the protection class of all the components.

16.5.12 Direction of rotation

Solid shaft (V), solid shaft on both sides (V), hollow shaft with keyway (A)

Type	Output side 4	Output side 3
K102 – K402	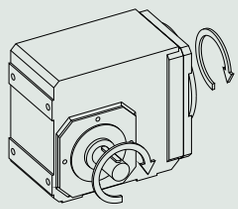	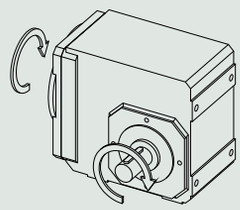
K203 – K403	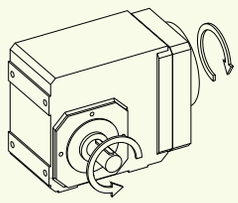	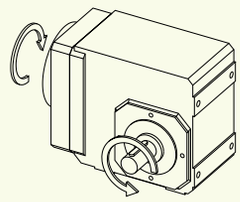
K513 – K1013	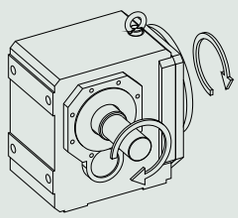	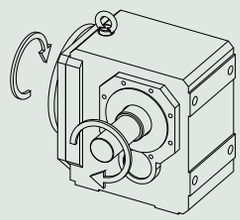
K514 – K1014	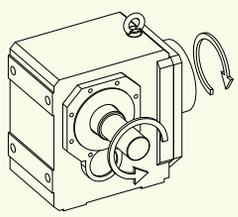	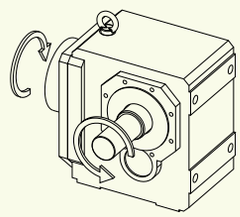

The specified directions of rotation also apply to gear units with hollow shaft (A) if the entry side of the machine shaft corresponds to the side of the solid shaft that is shown.

The direction of rotation for the shaft design of a solid shaft on both sides corresponds to the direction of rotation for output side 4.

The pictures show mounting position EL1.

Hollow shaft with shrink ring (S)

Type	Shrink ring side 4	Shrink ring side 3
K102 – K402	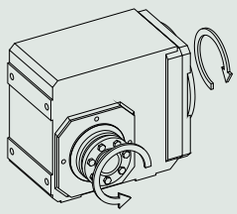	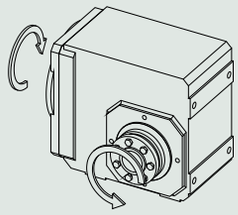
K203 – K403	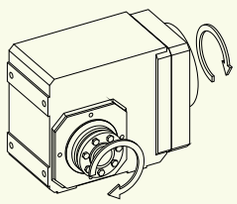	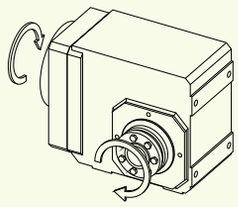
K513 – K813	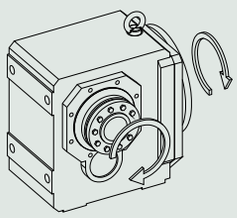	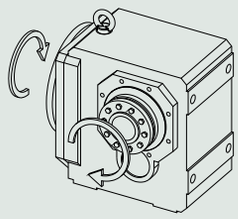
K514 – K814	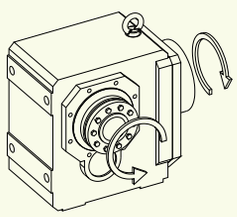	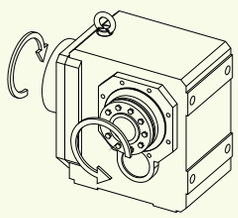
K913 – K1013	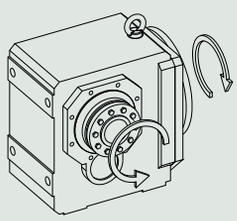	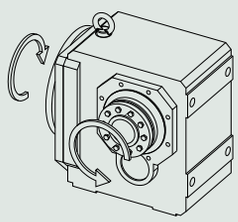
K914 – K1014	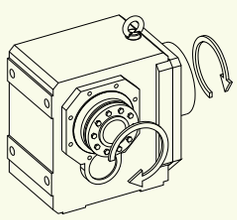	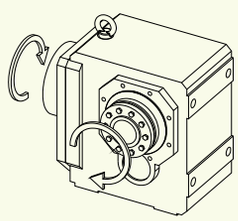

The pictures show mounting position EL1.

16.6 Project configuration

Project your drives using our SERVOsoft designing software. Download SERVOsoft for free at https://www.stoeber.de/en/ServoSoft.

Observe the limit conditions in this chapter to ensure a safe design for your drives.

An explanation of the formula symbols can be found in the chapter [▸ 18.1].

16.6.1 Drive selection

The formula symbols for values actually present in the application are marked with *.

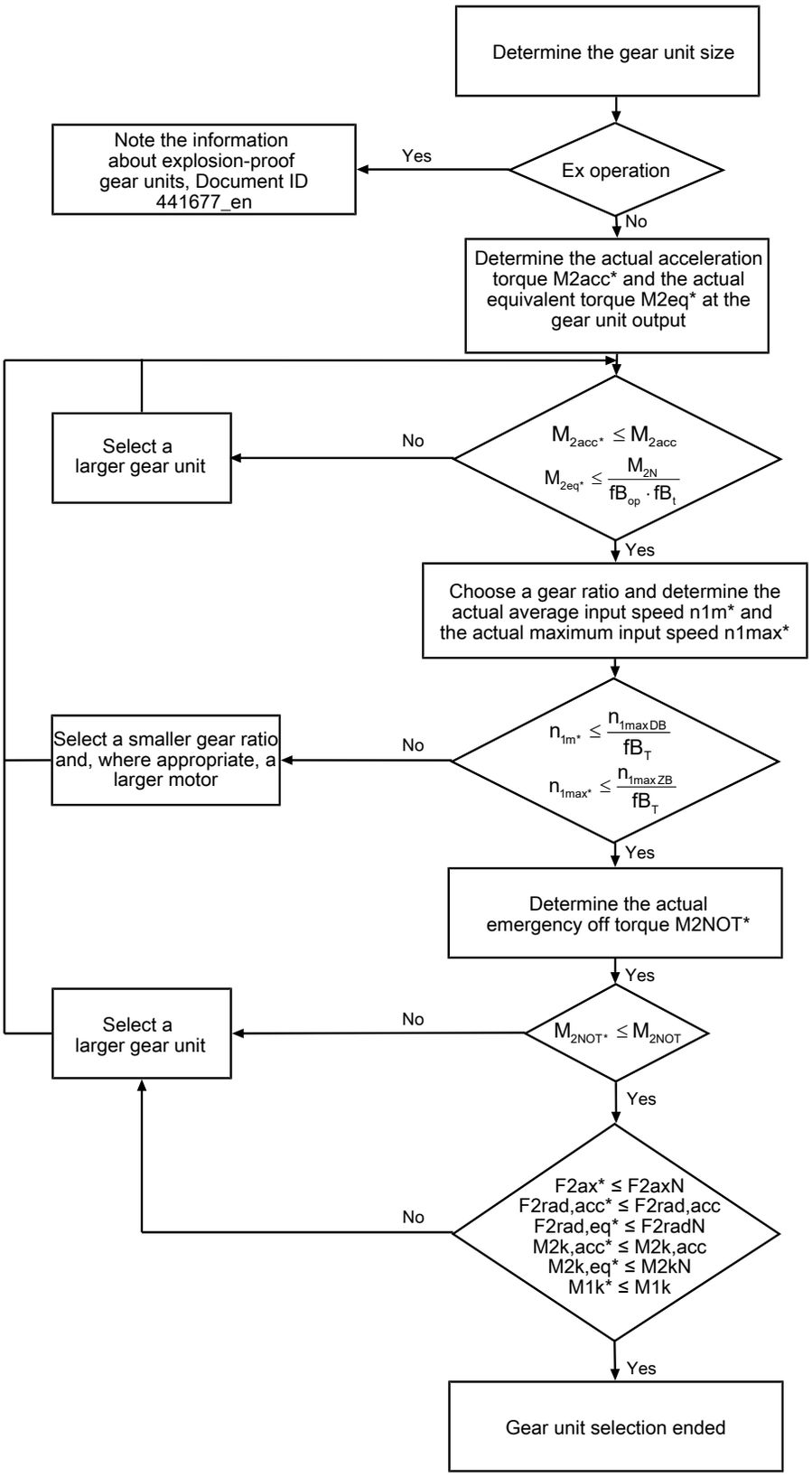

Calculate the forces and tilting torques in the chapter Permitted shaft loads.

The values for i, n_{1maxDB}, n_{1maxZB}, M_{2acc}, M_{2NOT} and M_{2N} can be found in the selection tables.

The values for fB_T, fB_{op} and fB_t can be found in the corresponding tables in this chapter.

Example of cyclic operation

The following calculations are based on a representation of the power taken from the output based in accordance with the following example:

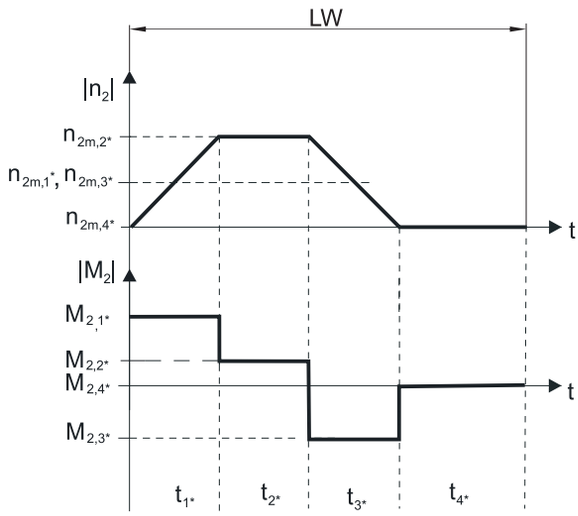

Calculation of the actual maximum acceleration torque

$$M_{2acc*} = J_{tot} \cdot \frac{\Delta n_2}{9.55 \cdot \Delta t} + M_{L*}$$

Calculation of the actual average input speed

$$n_{1m*} = n_{2m*} \cdot i$$

$$n_{2m*} = \frac{|n_{2m,1*}| \cdot t_{1*} + \ldots + |n_{2m,n*}| \cdot t_{n*}}{t_{1*} + \ldots + t_{n*}}$$

If $t_{1*} + \ldots + t_{3*} \geq 6$ min, calculate n_{2m*} without the rest phase t_{4*}.

The values for the ratio i can be found in the selection tables.

Calculation of the actual emergency-off torque

$$M_{2NOT*} = J_{tot} \cdot \frac{\Delta n_2}{9.55 \cdot \Delta t} + M_{L*}$$

Calculation of the actual equivalent torque

$$M_{2eq*} = \sqrt[3]{\frac{|n_{2m,1*}| \cdot t_{1*} \cdot |M_{2,1*}{}^3| + \ldots + |n_{2m,n*}| \cdot t_{n*} \cdot |M_{2,n*}{}^3|}{|n_{2m,1*}| \cdot t_{1*} + \ldots + |n_{2m,n*}| \cdot t_{n*}}}$$

Operating factors

Operating mode	fB_{op}
Uniform continuous operation	1.00
Cyclic operation	1.25
Reversing load cyclic operation	1.40

Run time	fB_t
Daily runtime ≤ 8 h	1.00
Daily runtime ≤ 16 h	1.15
Daily runtime ≤ 24 h	1.20

Temperature		fB_T
Motor cooling	**Surrounding temperature**	
Motor with forced ventilation	≤ 20 °C	0.9
	≤ 30 °C	1.0
	≤ 40 °C	1.15
Motor with convection cooling	≤ 20 °C	1.0
	≤ 30 °C	1.1
	≤ 40 °C	1.25

Notes

- The maximum permitted gear unit temperature of ≤ 80 °C must not be exceeded. Doing so may result in damage to the gear unit.

16.6.2 Permitted shaft loads for the output shaft

The values specified in the tables apply to the permitted shaft loads:

- For shaft dimensions in accordance with the catalog
- For output speeds n_{2m*} ≤ 20 rpm ($F_{2axN} = F_{2ax20}$; $F_{2radN} = F_{2rad20}$; $M_{2kN} = M_{2k20}$)
- Only if radial forces on the gear unit are stabilized by its pilots for the pitch circle diameter and flange housing design

16.6.2.1 V shaft design

Permitted shaft loads for V shaft design (solid shaft)

Type	z_2 [mm]	F_{2ax20} [N]	F_{2rad20} [N]	$F_{2rad,acc}$ [N]	M_{2k20} [Nm]	$M_{2k,acc}$ [Nm]
K1	40.0	1900	5000	5000	360	360
K2	42.0	2100	6000	6000	430	430
K3	45.0	2400	7000	7000	525	525
K4	52.0	3500	11200	11200	1050	1050
K5	72.0	3500	13450	13450	1580	1580
K6	72.0	4000	16000	16000	1960	1960
K7	85.0	5500	22000	22000	3200	3200
K8	60.0	7250	29000	29000	3800	3800
K9	87.0	16500	65000	65000	11200	11200
K10	84.0	25000	80000	80000	15200	15200

Reduced values apply in the case of a V shaft design (solid shaft) in conjunction with an NF housing design (foot + round flange):

Type	z_2 [mm]	F_{2ax20} [N]	F_{2rad20} [N]	$F_{2rad,acc}$ [N]	M_{2k20} [Nm]	$M_{2k,acc}$ [Nm]
K10	132.0	25000	64000	64000	15200	15200

For the V solid shaft design on both sides, the values for F_{2rad20} and M_{2k20} must be multiplied by a factor of 0.7.

For other output speeds, download diagrams at http://configurator.stoeber.de.

The following applies to output speeds n_{2m*} > 20 rpm:

$$F_{2axN} = \frac{F_{2ax20}}{\sqrt[3]{\frac{n_{2m*}}{20\ \text{rpm}}}} \qquad F_{2radN} = \frac{F_{2rad20}}{\sqrt[3]{\frac{n_{2m*}}{20\ \text{rpm}}}} \qquad M_{2kN} = \frac{M_{2k20}}{\sqrt[3]{\frac{n_{2m*}}{20\ \text{rpm}}}}$$

The values for F_{2ax20}, F_{2rad20} and M_{2k20} can be found in the table "Permitted shaft loads" in this chapter.

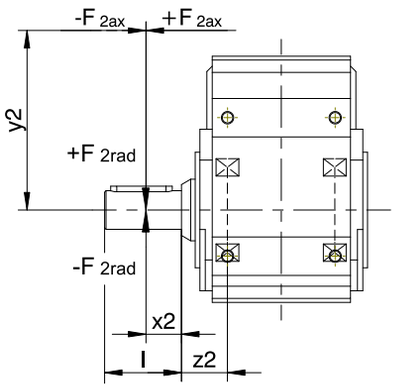

Fig. 3: Force application points for solid shaft

The specified values for F_{2rad20} are based on application of force at the middle of the output shaft: $x_2 = l/2$.

Shaft dimensions can be found in the "Dimensional drawings" chapter.

The following applies to other force application points:

$$M_{2k*} = \frac{2 \cdot F_{2ax*} \cdot y_2 + F_{2rad*} \cdot (x_2 + z_2)}{1000} \leq M_{2kN}$$

$$F_{2rad*} \leq F_{2radN}$$

$$F_{2ax*} \leq F_{2axN}$$

For applications with multiple axial and/or radial forces, you must add the forces as vectors.

In the event of EMERGENCY OFF operation (max. 1000 load changes), you can multiply the permitted forces and torques for F_{2ax20}, F_{2rad20} and M_{2k20} by a factor of two.

16.6.2.2 A and S shaft design

Permitted shaft loads for A shaft design (hollow shaft with keyway)

Type	z_2 [mm]	F_{2ax20} [N]	F_{2rad20} [N]	$F_{2rad,acc}$ [N]	M_{2k20} [Nm]	$M_{2k,acc}$ [Nm]
K1	40.0	1900	5000	5000	240	240
K2	42.0	2100	6000	6000	310	310
K3	45.0	2400	7000	7000	380	380
K4	52.0	3500	11200	11200	740	740
K5	39.0	2500	13450	13450	1000	1000
K6	42.0	3000	16000	16000	1300	1300
K7	45.0	4100	22000	22000	2100	2100
K8	50.0	5300	29000	29000	2600	2600
K9	56.0	7000	65000	65000	3600	3600
K10	56.0	9000	80000	80000	5000	5000

Permitted shaft loads for S shaft design (hollow shaft with shrink ring)

Type	z_2 [mm]	F_{2ax20} [N]	F_{2rad20} [N]	$F_{2rad,acc}$ [N]	M_{2k20} [Nm]	$M_{2k,acc}$ [Nm]
K1	40.0	1900	5000	5000	240	240
K2	42.0	2100	6000	6000	310	310
K3	45.0	2400	7000	7000	380	380
K4	52.0	3500	11200	11200	740	740
K5	39.0	2500	13450	13450	1000	1000
K6	42.0	3000	16000	16000	1300	1300
K7	45.0	4100	22000	22000	2100	2100
K8	50.0	5300	29000	29000	2600	2600
K9	56.0	7000	65000	65000	3600	3600
K10	56.0	9000	80000	80000	5000	5000

For other output speeds, download diagrams at http://configurator.stoeber.de.

The following applies to output speeds n_{2m*} > 20 rpm:

$$F_{2axN} = \frac{F_{2ax20}}{\sqrt[3]{\frac{n_{2m*}}{20\ rpm}}} \qquad F_{2radN} = \frac{F_{2rad20}}{\sqrt[3]{\frac{n_{2m*}}{20\ rpm}}} \qquad M_{2kN} = \frac{M_{2k20}}{\sqrt[3]{\frac{n_{2m*}}{20\ rpm}}}$$

The values for F_{2ax20}, F_{2rad20} and M_{2k20} can be found in the table "Permitted shaft loads" in this chapter.

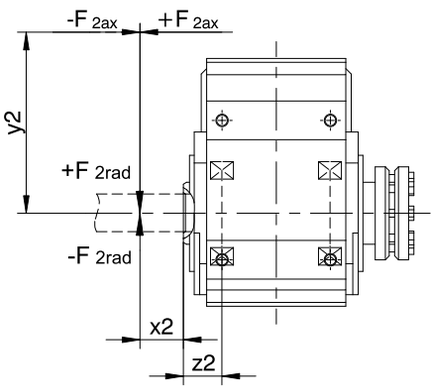

Fig. 4: Force application points for hollow shaft

You can determine the permitted radial forces from the permitted breakdown torque M_{2kN}. The actual radial forces may not exceed the permitted radial forces. The permitted radial forces pertain to the shaft end (x2 = 0).

$$M_{2k*} = \frac{2 \cdot F_{2ax*} \cdot y_2 + F_{2rad*} \cdot (x_2 + z_2)}{1000} \leq M_{2kN}$$

$$F_{2ax*} \leq F_{2axN}$$

For applications with multiple axial and/or radial forces, you must add the forces as vectors.

In the event of EMERGENCY OFF operation (max. 1000 load changes), you can multiply the permitted forces and torques for F_{2ax20}, F_{2rad20} and M_{2k20} by a factor of two.

16.6.3 Permitted breakdown torques at the gear unit input

For a horizontal mounting position of the motor, verify that the permitted breakdown torque at the gear unit input is not exceeded before installation on a STOBER gear unit. You can find information for how to do that in this chapter.

Calculate the actual breakdown torque as follows:

$M_{1k*} = F_{1k*} \bullet l_{sp} \leq M_{1k}$

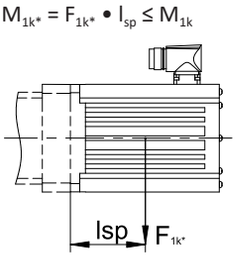

Type	M_{1k} [Nm]
ME10	25
ME20	60
ME30	125
ME40	250
ME50	600

16.6.4 Radial shaft seal rings

Leak-proofness

Our gear units are equipped with high-quality radial shaft seal rings and checked for leaks. However, a leak cannot be fully ruled out over the length of use of a gear unit. If you use a gear unit with goods incompatible with the lubricant, you must take measures to prevent direct contact with the gear unit lubricant in case of a leak.

16.6.5 Oil expansion tank

The gear units have a higher fill level in mounting position EL5. The oil expansion tank prevents oil from escaping out of the gear unit.

Notes

- We recommend using an oil expansion tank in mounting position EL5 (additional cost) for fast running gear units with an input speed n_1 > 1750 rpm and gear ratios i < 20.
- The oil expansion tank can only be used with certain sizes; see the chapter [▸ 16.3.17]

16.7 Additional documentation

Additional documentation related to the product can be found at
http://www.stoeber.de/en/downloads/

Enter the ID of the documentation in the Search... field.

Documentation	ID
Operating manual for C/F/K/S gear units and gear motors	443027_en
Operating manual for explosion-proof C/F/K/S gear units	443028_en
Information explosion-proof gear units	441677_en

17

Close to customers around the world

We offer you committed, expert advice and support and are available around the clock if service is required:

- 4 sales centers in Germany
- Worldwide presence in over 40 countries
- STOBER SERVICE NETWORK with over 80 service partners worldwide

Germany

STÖBER Antriebstechnik GmbH + Co. KG

Kieselbronner Strasse 12

75177 Pforzheim

Phone: +49 7231 582-0

sales@stoeber.de

www.stober.com

Service hotline: +49 7231 582-3000

Subsidiaries

STOBER AUSTRIA www.stoeber.at Phone +43 7613 7600-0 sales@stoeber.at	**STOBER SOUTH EAST ASIA** www.stober.sg sales@stober.sg
STOBER CHINA www.stoeber.cn Phone +86 512 5320 8850 sales@stoeber.cn	**STOBER SWITZERLAND** www.stoeber.ch Phone +41 56 496 96 50 sales@stoeber.ch
STOBER FRANCE www.stober.fr Phone +33 4 78.98.91.80 sales@stober.fr	**STOBER TAIWAN** www.stober.tw Phone +886 4 2358 6089 sales@stober.tw
STOBER ITALY www.stober.it Phone +39 02 93909570 sales@stober.it	**STOBER TURKEY** www.stober.com Phone +90 216 510 2290 sales-turkey@stober.com
STOBER JAPAN www.stober.co.jp Phone +81 3 5875 7583 sales@stober.co.jp	**STOBER UNITED KINGDOM** www.stober.co.uk Phone +44 1543 458 858 sales@stober.co.uk
STOBER USA www.stober.com Phone +1 606 759 5090 sales@stober.com	

18 Appendix

Table of contents

18.1 Formula symbols 418

18.2 Trademarks 419

18.3 Sales terms and delivery conditions 419

18.4 Publication details 419

18.1 Formula symbols

The formula symbols for values actually present in the application are marked with *.

Symbol	Unit	Explanation
C_2	Nm/ arcmin	Torsional stiffness relative to the gear unit output for M_{2acc}
C_{2k}	Nm/arcmin	Tilting stiffness
Δn_2	rpm	Speed difference
$\Delta\phi_2$	arcmin	Backlash at the output shaft with a blocked input
$\Delta\phi_{2red}$	arcmin	Reduced backlash at the output shaft with a blocked input
$\Delta\phi_{2redI}$	arcmin	Reduced backlash (backlash class I) at the output shaft with a blocked input
$\Delta\phi_{2redII}$	arcmin	Reduced backlash (backlash class II) at the output shaft with a blocked input
Δt	s	Timespan
d_{MW}	mm	Motor shaft diameter
ED_{10}	%	Duty cycle based on 10 minutes
η_{get}	%	Efficiency of the gear unit at nominal torque
F_{1k*}	N	Static and dynamic loads present in the application from the weight of the motor, mass acceleration and vibrations at the gear unit input
F_{2ax*}	N	Actual axial force at the gear unit output
F_{2ax100}	N	Permitted axial force at the gear unit output for $n_{2m*} \leq 100$ rpm (without radial force)
F_{2ax20}	N	Permitted axial force at the gear unit output for $n_{2m*} \leq 20$ rpm (without radial force)
F_{2axN}	N	Permitted nominal axial force at the gear unit output (without radial force)
F_{2rad*}	N	Actual radial force on the gear unit output
$F_{2rad,acc}$	N	Permitted radial acceleration force at the gear unit output
$F_{2rad,acc*}$	N	Radial acceleration force present at the gear unit output
$F_{2rad,acc,1*}$	N	Radial acceleration force present at the gear unit output in the first time period
$F_{2rad,acc,n*}$	N	Radial acceleration force present at the gear unit output in the nth time period
$F_{2rad,eq*}$	N	Actual equivalent force at the gear unit output
$F_{2rad100}$	N	Permitted radial force at the gear unit output for $n_{2m*} \leq 100$ rpm
F_{2rad20}	N	Permitted radial force on the gear unit output for $n_{2m*} \leq 20$ rpm
F_{2radN}	N	Permitted nominal radial force at the gear unit output
fB_{op}	–	Operating mode operating factor
fB_t	–	Runtime operating factor
fB_T	–	Temperature operating factor
fB_{ZB}	–	Operating factor for cyclic operation
i	–	Gear ratio
J_1	$kgcm^2$	Mass moment of inertia relative to the gear unit input
J_{tot}	$kgcm^2$	Total mass moment of inertia (based on the motor shaft)
l	mm	Length of the output shaft
L_{10h}	h	Bearing service life
L_{pA}	dBA	Sound pressure level of the gear unit at n_{1N} = 2000 rpm
l_{sp}	m	Distance between the motor's center of mass and the gear unit input's center of mass
LW	-	Load change: A load change (LW) corresponds to an acceleration and a deceleration.
m	kg	Weight (for gear units without lubricant)
M_{1k}	Nm	Permitted tilting torque at the gear unit input
M_{1k*}	Nm	Existing tilting torque on the gear unit input
$\lvert M_2 \rvert$	Nm	Amount of torque on the output
$M_{2.1*} – M_{2.4*}$	Nm	Actual torque in the respective time segment (1 to 4)
$M_{2,n*}$	Nm	Actual torque in the n-th time segment
M_{2acc}	Nm	Maximum permitted acceleration torque on the gear unit output
M_{2acc*}	Nm	Actual acceleration torque on the gear unit output

Symbol	Unit	Explanation
M_{2accHT}	Nm	Maximum permitted acceleration torque on the gear unit output with reduced backlash
M_{2eq*}	Nm	Equivalent torque present on the gear unit output
M_{2k*}	Nm	Actual tilting torque on the gear unit output
$M_{2k,acc}$	Nm	Permitted acceleration tilting torque at the gear unit output
$M_{2k,acc*}$	Nm	Acceleration tilting torque present at the gear unit output
$M_{2k,acc,1*}$	Nm	Acceleration tilting torque present at the gear unit output in the first time period
$M_{2k,acc,n*}$	Nm	Acceleration tilting torque present at the gear unit output in the nth time period
$M_{2k,eq*}$	Nm	Actual equivalent tilting torque on the gear unit output
M_{2k100}	Nm	Permitted tilting torque on the gear unit output for $n_{2m*} \leq 100$ rpm
M_{2k20}	Nm	Permitted tilting torque on the gear unit output for $n_{2m*} \leq 20$ rpm
M_{2kN}	Nm	Permitted nominal tilting torque at the gear unit output
M_{2N}	Nm	Nominal torque on the gear unit output (relative to n_{1N} = 1500 rpm)
M_{2NOT}	Nm	Gear unit emergency-off torque on the gear unit output for max. 1000 load changes
M_{2NOT*}	Nm	Actual emergency off torque for the gear unit on the gear unit output
M_{L*}	Nm	Actual load torque
n_{1m*}	rpm	Actual average input speed
n_{1max*}	rpm	Actual maximum input speed
n_{1maxDB}	min^{-1}	Maximum permitted input speed of the gear unit in continuous operation
		(at surrounding temperature of 20 °C)
n_{1maxZB}	min^{-1}	Maximum permitted input speed of the gear unit in cyclic operation
		(at surrounding temperature of 20 °C)
$\|n_2\|$	rpm	Value of output speed
n_{2m*}	rpm	Actual average output speed
$n_{2m,1*} – n_{2m,4*}$	rpm	Actual average output speed in the respective time segment (1 to 4)
$n_{2m,n*}$	rpm	Actual average output speed in the n-th time segment
t	s	Time
$t_{1*} – t_{4*}$	s	Duration of the respective time segment (1 to 4)
t_{n*}	s	Duration of the n-th time segment
x_2	mm	Distance of the shaft shoulder to the force application point
y_2	mm	Distance of the shaft axis to the axial force application point
z_2	mm	Distance of the shaft shoulder to the middle of the output bearing

18.2 Trademarks

The following names are trademarks or registered trademarks of STOBER:

EasyAdapt®	EasyAdapt® is a registered trademark of STÖBER Antriebstechnik GmbH + Co. KG
FlexiAdapt®	FlexiAdapt® is a registered trademark of STÖBER Antriebstechnik GmbH + Co. KG

18.3 Sales terms and delivery conditions

You can find our current sales terms and delivery conditions at http://www.stoeber.de/en/gtc.

18.4 Publication details

Product catalog for servo gear units, ID 443054_en.

You can find current versions of PDF files online at http://www.stoeber.de/en/downloads/.

ID 443054_en.04 12/2021

STÖBER Antriebstechnik GmbH + Co. KG
Kieselbronner Strasse 12
75177 Pforzheim
Germany
Phone: +49 7231 582-0
mail@stoeber.de
www.stober.com

Service hotline:
+49 7231 582-3000

We reserve the right to make technical changes.

STÖBER