Drive controller SI6
Product Briefing

stober.com

en-US
04/2017
ID 442779.01

Table of contents

1 Purpose ... 4

2 Project description ... 5

3 Hardware components ... 6

3.1 Drive controller ... 6
3.1.1 Type designation ... 6
3.1.2 Key data ... 7
3.1.3 Dimensions ... 9
3.1.4 Energy efficiency as per EN 50598-2 ... 11
3.1.5 Asymmetrical load on double axis controllers ... 11

3.2 Supply module ... 12
3.2.1 Type designation ... 12
3.2.2 Key data ... 12
3.2.3 Dimensions ... 14

3.3 Quick DC-Link ... 15
3.3.1 Key data ... 15
3.3.2 Dimensions ... 16

3.4 Structure and width ... 17
3.4.1 Minimum clearances ... 18
3.4.2 Accessories for installation ... 18

4 Software components ... 19

4.1 Projecting and commissioning ... 19
4.1.1 DriveControlSuite ... 19
4.1.2 AutomationControlSuite ... 19

4.2 Applications ... 20

4.3 Firmware ... 21

5 Safety technology ... 22

6 Communication ... 23

7 Approvals ... 24

8 Integration in the product range ... 25

9 Competition ... 26

9.1 B&R ... 26

9.2 Beckhoff ... 26

9.3 Lenze ... 27

10 Marketing measures ... 30

04/2017 | ID 442779.01

11 Infrastructure 31

12 Extensive documentation 32

1 Purpose

This document contains product information for the STOBER sales team. It should support the market launch of the SI6 drive controller series and contains sales-relevant information that should support the sales team when presenting the drive controllers.

The document offers a lot of information about the market launch but it is edited and updated based on feedback and additional information.

This document is only intended for internal use.

2 Project description

The new SI6 drive controller series and the associated PS6 supply modules are the product results from the ePEP projects **E1211 multi-axis drive system** and **E1602 high power multi-axis drive system**. The aim of the projects was to develop single and double axis controllers with a nominal current of up to 40 A (with a clock frequency of 8 kHz) as well as suitable supply modules with a power of 10 kW and 20 kW.

Requirements

The main goal was to achieve a market price that is oriented towards the competition, e.g. i700 servo inverter from Lenze.

With a 45 mm width for the double axis controller with a nominal continuous current of 2 × 5 A (4 kHz), one of the slimmest double axis controllers on the market is to be developed.

On the one hand, the drive controllers should be optimized for operation with controller-based applications. On the other hand - within the scope of the available hardware - it should be possible to also use them for drive-based applications.

Combination with SD6 drive controller series should be possible.

General conditions

Only the Ethernet-based fieldbuses EtherCAT and PROFINET RT (Q4/2016) are provided as fieldbus interfaces as they can be realized directly on the System-on-Chip platform ZYNQ (FPGA technology with multicore ARM processors). EIA-485 interfaces for CAN, for example, were dispensed with.

All nominal data of the SI6 drive controller has been determined for a surrounding temperature of 45 °C, a maximum installation height of 1000 m above sea level and a 4 kHz pulse clock frequency of the power unit. This increases the comparability of the data with a variety of competitors.

All sizes of the SI6 drive controller can be combined with each other in the DC link. The DL6B Quick DC-Link modules were developed for wiring the DC links. They can be wired using standard busbars. The potentials D+, D- and PE are wired to each other for this. The SI6 drive controllers therefore involve a significant reduction of wiring expenditure.

Results

The SI6 series combines a compact design, simple wiring, modern interfaces as well as a high controller performance with highly competitive prices.

3 Hardware components

The multi-axis drive system consists of at least one PS6 supply module and one SI6 drive controller. For the energy supply of the existing drive controllers in the group, a suitable Quick DC-Link module for the DC link connection is needed for each supply module and for each drive controller.

Below you will gain an overview of the available hardware components.

3.1 Drive controller

3.1.1 Type designation

SI	**6**	**A**	**0**	**6**	**1**	**Z**

Tab. 1: Example code for the SI6 type designation

Code	Designation	Design
SI	Series	ServoInverter
6	Generation	6. Generation
A	Version	
0 – 3	Size	
6	Power output stage	Power output stage within the size
1 2	Axis controller	Single axis controller Double axis controller
Z R Y	Safety technology	SZ6: without safety technology SR6: STO via terminals SY6: STO and SS1 via FSoE

Tab. 2: Meaning of the SI6 example code

04/2017 | ID 442779.01

3.1.2 Key data

The SI6 drive controller is available in four sizes as a single or double axis controller. In additional different safety options are available.

The multi-axis drive system with SI6 designed for EtherCAT or PROFINET was set up with System-on-Chip technology (SoC) from high performance FPGA and multicore ARM processors. The SoC also accepts the fieldbus interface that is consequently implemented via the firmware of the controller. The fieldbus interface can therefore also be changed by changing the firmware.

Fig. 1: SI6 in sizes 0 to 3

An overview

- The width of size 0 is only 45 mm, the width of size 1 and size 2 (single axis controller) is only 65 mm. The width of the new sizes 2 (double axis controller) and 3 is 105 mm.
- DC link connection via DL6B Quick DC-Link modules
- Very good control performance:
  - Current, velocity, position controller cycle time: 62.5 µs
  - Support for encoders with a bit width up to 64 bit
- Multi-encoder interface for all requirements (easy assembly, high resolution or robustness):
  - HIPERFACE DSL One Cable Solution with smart electronic motor rating plate function, i.e. during a motor change, only changed data is updated and unchanged data is retained.
  - EnDat 2.2 digital with smart electronic motor rating plate function
  - SSI
  - Resolver
  - TTL incremental encoder (HTL via adapter possible)
- Paramodule function via SD-/SDHC card
- 4 binary inputs per axis for hardware limit switch, reference switch, etc.
- Simple, EMC-compliant connection of the motor line using motor connection terminals with EMC shield contact and shield clamp
- Economically attractive performance to price ratio

Nominal currents ($I_{2N,PU}$)

- Single axis controller:
  - SI6A061: 5 A (4 kHz); 4.5 A (8 kHz)
  - SI6A161: 12 A (4 kHz); 10 A (8 kHz)
  - SI6A261: 22 A (4 kHz); 20 A (8 kHz)
- E1602 high power multi-axis drive system:
  - SI6A361: 50 A (4 kHz); 40 A (8 kHz)
- Double axis controller:
  - SI6A062: 5 A (4 kHz); 4.5 A (8 kHz)
  - SI6A162: 12 A (4 kHz); 10 A (8 kHz)
- E1602 high power multi-axis drive system:
  - SI6A262: 25 A (4 kHz); 20 A (8 kHz)
- Overload capacity of 250 % for operation at 8 kHz ($I_{2max,PU}$)
- The clock frequency is parametrized for double axis controllers via parameter B24 Switching frequency for both axes

04/2017 | ID 442779.01

3.1.3 Dimensions

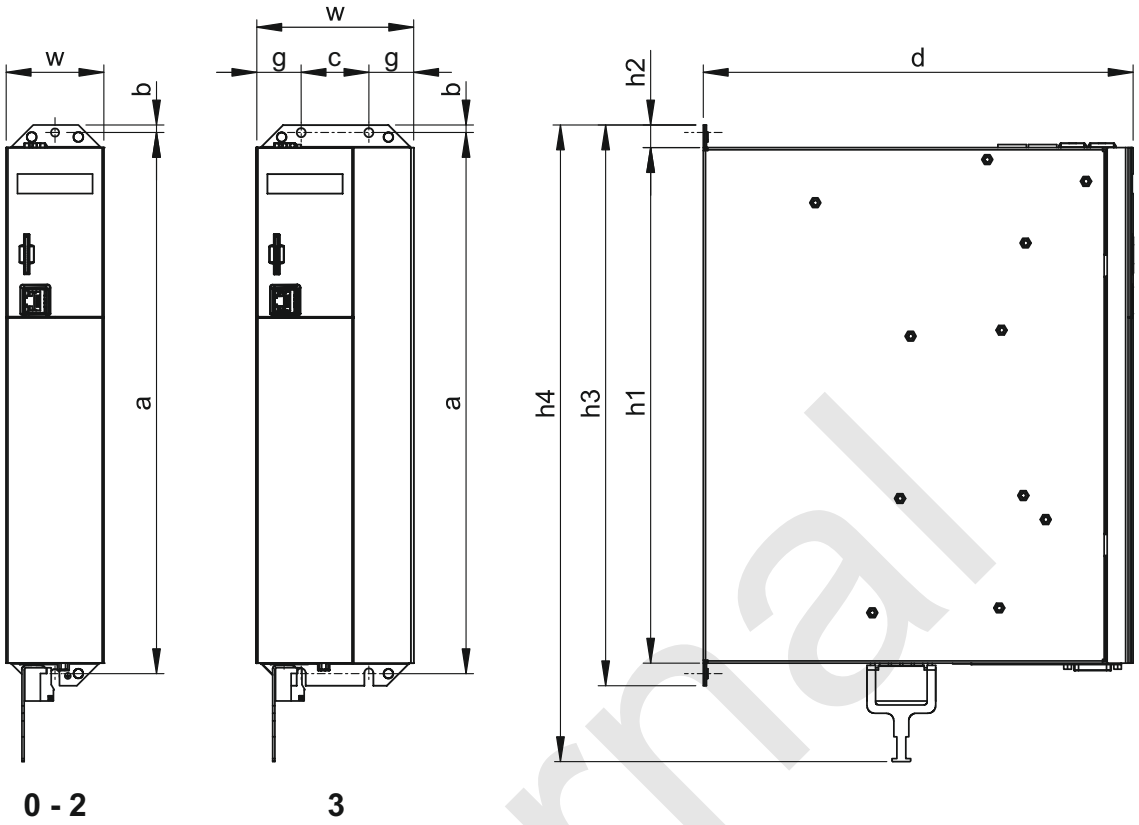

Fig. 2: SI6 dimensional drawing

Dimension			Size 0	Size 1	Size 2[1]	Size 2[2]	Size 3
Drive controller	Width	w	45	65		105	
	Depth	d	265	286			
	Body height	h1	343				
	Fastening clip height	h2	15				
	Height incl. fastening clips	h3	373				
	Total height incl. shield connection	h4	423				
Fastening holes (M5)	Vertical distance	a	360+2				
	Vertical distance to upper edge	b	5				
	Horizontal distance from the fastening holes	c	45				
	Horizontal distance from the side edge	g	30				

Tab. 3: Dimensions SI6 [mm]

[1] Single axis controller
[2] Double axis controller

3.1.4 Energy efficiency as per EN 50598-2

With regard to energy efficiency, the SI6 drive controller achieves significantly better values than the IE2 minimum efficiency levels required by the standard. The absolute and relative performance loss values as per EN 50598-2 can be found in the multi-axis drive system with SI6 and PS6 manual, see section Extensive documentation [▸ 32].

3.1.5 Asymmetrical load on double axis controllers

When operating 2 motors at a SI6 double axis controller, it is possible to operate one of the motors with a permanent current above the drive controller nominal current if the permanent current of the second connected motor is less than the drive controller nominal current. Economical combinations of double axis controllers and motors are therefore possible.

The nominal output current for axis B can be determined using the following formula if the output current for axis A is known:

Example 1

$$I_{2PU(B)} = I_{2N,PU} - \left(I_{2PU(A)} - I_{2N,PU} \right) \times \frac{3}{5} \qquad \text{for} \qquad 0 \le I_{2PU(A)} \le I_{2N,PU}$$

Example 2

$$I_{2PU(B)} = I_{2N,PU} - \left(I_{2PU(A)} - I_{2N,PU} \right) \times \frac{5}{3} \qquad \text{for} \qquad I_{2N,PU} \le I_{2PU(A)} \le 1{,}6 \times I_{2N,PU}$$

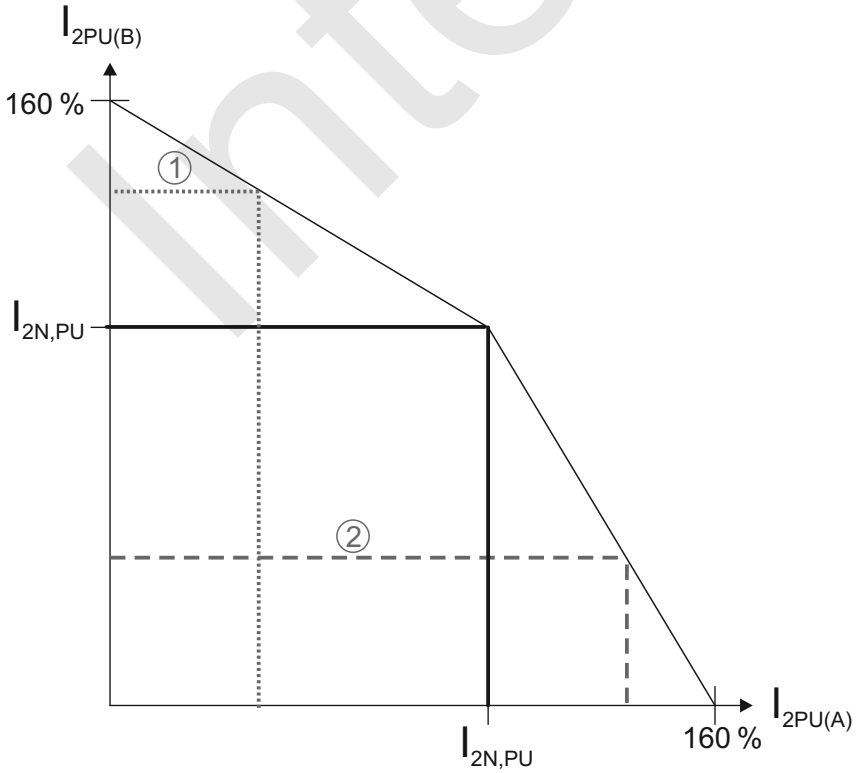

Fig. 3: Asymmetrical load on SI6 double axis controllers

Information

Note that the available maximum currents $I_{2max,PU}$ of the axis controller also refer to the nominal output current $I_{2N,PU}$ for an asymmetrical load.

3.2 Supply module

3.2.1 Type designation

PS	**6**	**A**	**2**	**4**

Tab. 4: Example code for the PS6 type designation

Code	Designation	Design
PS	Series	PowerSupply
6	Generation	6th generation
A	Version	
2 – 3	Size	
4	Power output stage	

Tab. 5: Meaning of the PS6 example code

3.2.2 Key data

The PS6 supply module is available in two sizes with a nominal output of 10 kW or 20 kW.

Fig. 4: PS6 in sizes 2 and 3

An overview

- The width of size 2 is only 45 mm, the width of size 3 is only 65 mm
- DC link connection via DL6B Quick DC-Link modules; connection via flexible or rigid conductor with wire end ferrules with or without plastic sleeve and a maximum conductor cross-section of 16 mm²
- Parallel operation of supply modules for higher feed-in power: a maximum of 3 PS6A34s or 6 PS6A24s can be operated in parallel; a derating factor of 0.8 per module is to be set for the nominal output in this case
- Integrated brake chopper
- Fast discharge of the DC link circuit via the braking resistor in case of power failure. The fast discharge is activated when no power supply is present for 20 s and the DC link voltage has reduced over this time
- Option for voltage measurement at the front of device
- Connection for braking resistor with temperature monitoring
- Fan for commissioning using switch can be switched on/off
- 3 diagnostic LEDs on the front of device and 3 relay outputs for the device status on the top of device
- The supply modules do not have any fieldbus interface
- Design is the same as SI6 drive controller
- Space-saving and easily accessible connections on the top and bottom of the supply modules

3.2.3 Dimensions

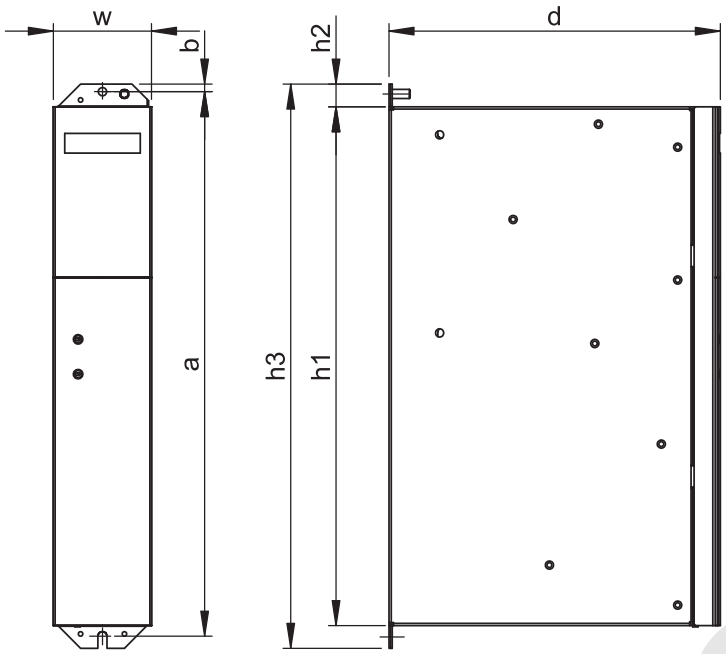

Fig. 5: PS6 dimensional drawing

Dimension			Size 2	Size 3
Supply module	Width	w	45	65
	Depth	d	204	219
	Body height	h1	343	
	Fastening clip height	h2	15	
	Height incl. fastening clips	h3	373	
Fastening holes (M5)	Vertical distance	a	360+2	
	Vertical distance to upper edge	b	5	

Tab. 6: Dimensions PS6 [mm]

3.3 Quick DC-Link

Electric motors that are being braked act like generators: in operation with an active drive controller, they convert the kinetic energy inherent in the movement into electrical energy. This electrical energy is stored in the DC link capacitors of the drive controller. It can be made available to driving motors if the DC link circuits are connected, which makes for efficient use. In a DC link connection, the DC link capacitors of the relevant drive controllers are switched in parallel. That increases the maximum amount of energy that can be absorbed in the DC intermediate circuit in comparison to an individual device.

3.3.1 Key data

The DC link capacitors of SI6 drive controllers can be connected and combined with one or more PS6 supply modules. The Quick DC-Link modules of type DL6B are mounted directly on the mounting plate and connected via 3 busbars with a cross-section of 5 mm x 12 mm. The busbars are fixed without screws or tools using a patented, maintenance-free spring clamp process. The supply modules and the drive controllers can then be mounted on the Quick DC-Link modules and connected to the Quick DC-Link modules. The busbars disappear behind the PS6 supply modules and SI6 drive controllers so that they cannot be touched.

DL6B is available in the following designs suitable for the individual drive controller and supply module types:

Typ	DL6B10	DL6B11	DL6B12	DL6B20	DL6B21
Id.-Nr.	56655	56656	56663	56657	56658
SI6A061	X	—	—	—	—
SI6A062	X	—	—	—	—
SI6A161	—	X	—	—	—
SI6A162	—	X	—	—	—
SI6A261	—	X	—	—	—
SI6A262	—	—	X	—	—
SI6A361	—	—	X	—	—
PS6A24	—	—	—	X	—
PS6A34	—	—	—	—	X

Tab. 7: Assignment DL6B for SI6 and PS6

An overview

- Current-carrying capacity up to 200 A by using busbars with a cross-section of 5 mm x 12 mm
- Touch-proof assembly between rear panel and drive controller or supply module
- Simple connection without screws or tools using patented spring clamp process
- The combination with SD6 drive controllers via Quick DC-Link is also possible

3.3.2 Dimensions

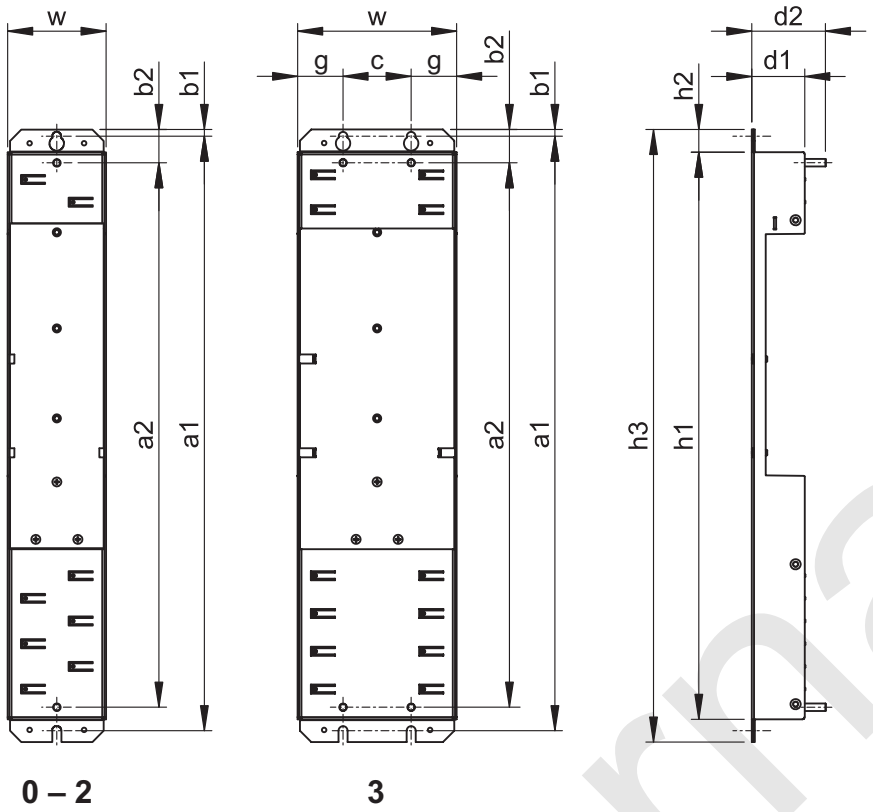

Fig. 6: DL6B dimensional drawing

Dimension			DL6B10 DL6B20	DL6B11 DL6B21	DL6B12
Quick DC-Link	Width	w	45	65	105
	Depth	d1	35		
	Depth incl. attachment bolts	d2	49		
	Height	h1	375		
	Fastening clip height	h2	15		
	Height incl. fastening clips	h3	405		
Fastening holes	Vertical distance (wall mounting)	a1	393+2		
	Vertical distance (module mounting)	a2	360		
	Vertical distance to upper edge	b1	4.5		
	Vertical distance to upper edge	b2	22		
	Horizontal distance from the fastening holes	c	—		45
	Horizontal distance from the side edge	g	—		30

Tab. 8: Dimensions DL6B [mm]

3.4 Structure and width

Size 0 of the SI6 drive controller with a width of only 45 mm provides a nominal current of up to 5 A. Size 3 with a width of only 105 mm achieves a nominal current of up to 50 A.

The structure is optimized for installation in Rittal system control cabinets. The minimum clearances as well as the dimensions of the individual drive controllers and supply modules are the determining factors for the total dimensions. In addition the depth of the Quick DC-Link modules must be considered for the depth.

3.4.1 Minimum clearances

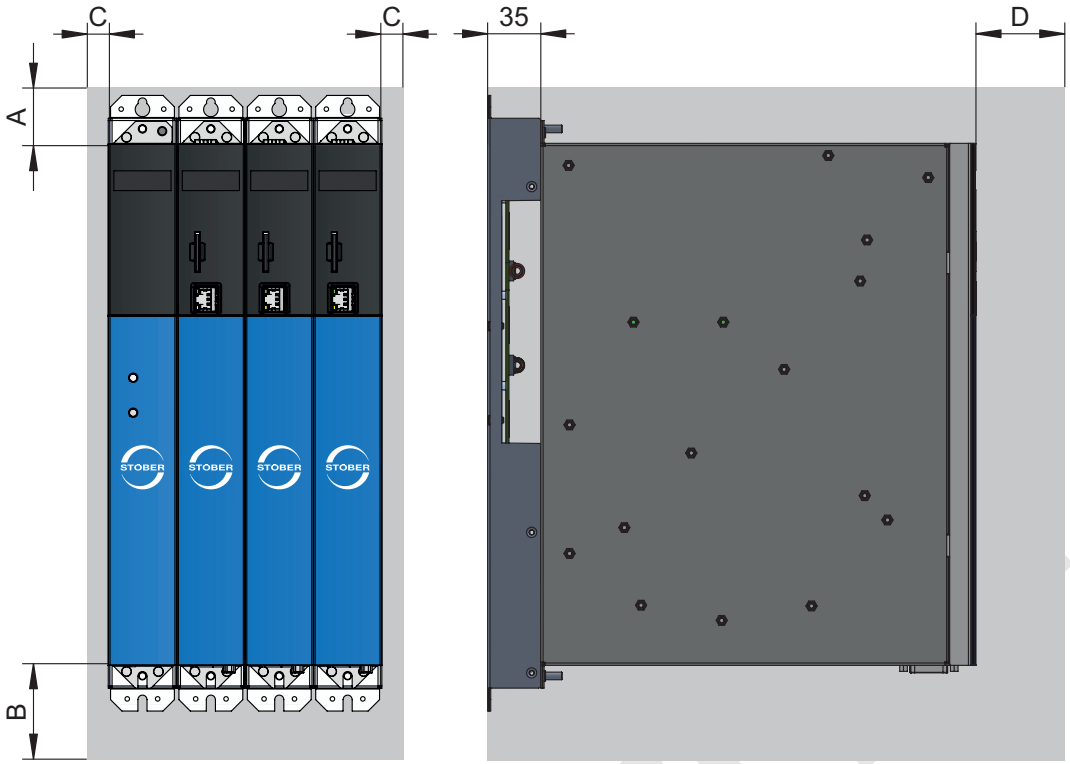

Fig. 7: Minimum clearances

Minimum clearance	A (above)	B (below)	C (on the side)	D (to the front)
All sizes	100	200	5	50[3]

Tab. 9: Minimum clearances for the multi-axis drive system [mm]

3.4.2 Accessories for installation

The following installation accessories are available:

- Suitable terminal strips for SI6 drive controller and PS6 supply module
- Encoder cable
- Power cable
- Hybrid cable

[3] Minimum clearence to be taken into account for a permanent connection of the service interface X9

04/2017 | ID 442779.01

4 Software components

The drive system is realized with the aid of the available software components.

4.1 Projecting and commissioning

The following software components are available for configuration and commissioning.

4.1.1 DriveControlSuite

Free configuration and commissioning software for the configuration and parametrization of all drive controllers of the 6th generation of STOBER drive controllers is not permitted:

- Configuration of the SI6 single and double axis controller
- Project archiving
- Control panels
- Wizard function for simple commissioning
- In preparation: multi-axis oscilloscope function

4.1.2 AutomationControlSuite

The AutomationControlSuite development environment with all functions included in CODESYS V3 for motion control (PLCopen, DIN 66025) and for PLCs (Programmable Logic Controllers) (IEC 61131-3).

SoftMotion driver

All 8 device types of the SI6 drive controller are supported by a suitable SoftMotion driver. At the moment this is only available using the AS6. To be able to operate the drive controller via EtherCAT, the relevant drive controller type in the AS6 only has to be selected from a list, which completes the fieldbus configuration. At the end of 2016 CODESYS will also include this driver as standard so that the SI6 drive controller can be operated with every EtherCAT-compliant CODESYS controller.

Drive&Motion library

From the next version of the AutomationControlSuite in Q4/2016, the Drive&Motion libraries will be supplemented with the functionality for SI6 as well as support for SD6. This saves the machine manufacturer extensive programming activities and he can create his machine more cheaply and quickly. Customers can then also use the comfort functions such as axis blocks, acyclic communication or plain text error display that they are used to with SI6 drive controllers.

Example applications

There are already numerous example applications for cam discs, CNC or visualization for the SD6 drive controller based on Drive&Motion blocks. These will also be partially available with the release of the next AS6 version in Q4/2016 for SI6. The example projects can be changed from SD6 to SI6 with minimum effort. Naturally this applies equally for real customer systems that are based on Drive&Motion blocks. In this way the engineering effort for a drive change within the STOBER system is minimal.

As the SI6 drive controller supports the EoE protocol, extensive drive diagnostics can be obtained via the EtherCAT cabling from the AS6 from Q4/2016. The parameter settings necessary for this are automatically created by the AS6. The user does not have to make any manual settings. For example, the drive load, the state of binary inputs or the motor temperature can be read when the system is running. Each axis of the SI6 can also be directly commanded from the AS6. These functions are also available for a remote maintenance connection on the machine.

4.2 Applications

The SI6 drive controller can be flexibly used in controller-based and drive-based applications.

Controller-based applications as per CiA402

CiA Controller Based for applications with synchronized, cyclic assignment of reference values by a motion controller, type MC6, for example.

With the following operation modes:

- 6: Homing mode (19 referencing methods)
- 7: Interpolated position mode
- 8: Cyclic synchronous position mode (csp)
- 9: Cyclic synchronous velocity mode (csv)
- 10: Cyclic synchronous torque mode (cst)
- -1: Jog (manufacturer-specific)

Drive-based applications as per CiA402

CiA 402 Drive Based for applications with decentralized movement controller or single axis mode. Also for connecting to controllers from third-party manufacturers such as Beckhoff, Trio Motion.

With the following operation modes:

- 6: Homing mode (19 referencing methods)
- 1: Profile position mode (pp)
- 3: Profile velocity mode (pv)
- 4: Profile torque mode (pt)

Drive-based applications from STOBER

STOBER Drive Based for universal and flexible solutions.

With the following operation modes:

- Command:
  The command operation mode provides the maximum flexibility for controllers. All properties of the movements are specified directly by the controller.
- Motion block:
  The properties of the movements in the drive are predefined in the motion block operation mode so that only a start signal for the execution of the movement is necessary; complete motion sequences can be defined by linking

- Velocity, torque/force:
  There is a separate operation mode available for applications controlled by velocity or torque/force such as pumps, fans or conveyor belts. This also allows for operation without a controller
- Assignments for position, velocity, acceleration and jerk

4.3 Firmware

The following points are particularly noteworthy with regard to firmware:

- Dynamic field weakening
- Support for up to 64 bit encoder resolution in the control cascade (single-turn / multiturn)
- Efficiency controller for asynchronous motors
- Velocity control cascade
  - Power, velocity and position control in 62.5 µs
- Automatic PWM switching (B24 Switching frequency)
  - 17: 4 + 8 kHz automatic
  - 18: 8 + 16 kHz automatic
  - 19: 4 + 8 + 16 kHz automatic
- Inductance compensation for higher dynamics
  - Adaptation of the current controller gain to the load-dependent inductance
  - Current control of stable available torque can be used better
  - Update parameter B59 Updating current controller gain
- Advanced diagnostics capability
  - 250 µS scope resolution
  - Advanced scope memory
  - Advanced to 12 trace channels
  - Advanced trigger functionality: manual, immediate, simple trigger (source, condition, comparison value, minimum time), advanced (logical operations)
- Autotuning current controller at standstill
  - Start action via parameter B49 Optimize current controller (standstill)
  - Current control of stable available torque can be used better
- Control modes
  - Synchronous servo motors / torque motors
  - Asynchronous motors
- Device fan switchable for configuration
  - A15 Fan for SI6
  - Front switch at the bottom of PS6 device
- Firmware update during operation possible

5 Safety technology

The safety modules are used to realize the STO safety function. They prevent the generation of a rotary field in the power output stage of the drive controller. For an external requirement or in the event of error, the safety module switches the drive controller to the STO state. Different user interfaces and additional safety functions are provided depending on the selected design of the accessories.

The SI6 drive controller is delivered in the standard design without safety technology (option SZ6, ID no. 56660). Alternatively the following options are available:

SR6 – STO via terminals

- Wear-free, electronic Safe Torque Off (STO) safety function
- In preparation: SIL 3, PL e (category 4) certification

SY6 – STO and SS1 via FSoE

- STO safety function can be simply connected via EtherCAT to FSoE master component (e.g. Beckhoff EL69xx)
- FSoE slave address adjustable via DIP switch
- EtherCAT certified
- In preparation: SIL 3, PL e (category 4) certification

Features of the safety technology

- Easy to Use:
  - No additional cyclic function test required during operation by end customer
  - Higher productivity
  - Lower operating costs
- Effective on both axes for double axis controllers (saves wiring and configuring twice)
- All safety functions were designed so that no additional cyclic function test is required
- The safety module must be considered when ordering the drive controller and cannot be delivered individually

6 Communication

EtherCAT (FSoE, EoE)

The drive controller has two interfaces for the EtherCAT connection on the top of the device as well as via an Ethernet service interface on the front of the device. Cables for the connection are available separately.

EtherCAT is an Ethernet-based fieldbus system that was developed by Beckhoff and the EtherCAT Technology Group (ETG). EtherCAT is an open technology that is standardized in the international standards IEC 61158 and IEC 61784 as well as in ISO 15745-4. EtherCAT is a very fast industrial Ethernet system that is suitable for use in time-critical motion control applications.

Safety over EtherCAT (FSoE) designates a safe communication layer with which safe process data can be transferred between Safety-over-EtherCAT devices. Compliance with Safety Integrity Level SIL 3 was confirmed by TÜV. EtherCAT is considered to be a “black channel” that contains safe as well as standard data. The safety logic is decentrally set up via a TwinSAFE terminal EL6900 (FSoE master). A standard PLC only provides the data exchange between the FSoE master and the FSoE slaves. The FSoE master sends a FSoE master frame that contains the safety outputs. A FSoE master can manage one or more FSoE slaves. The FSoE slave sends a FSoE slave frame when it has received a valid FSoE master frame from the FSoE master. Each subscriber monitors the partner sending a new FSoE frame within the safe parameterized FSoE watchdog time.

Any Ethernet data traffic in the EtherCAT segment can be transported with the **Ethernet over EtherCAT (EoE)** protocol. Standard Ethernet devices are connected within the EtherCAT segment via a so-called switchport and the Ethernet frames are tunneled via EoE. The EtherCAT network is fully transparent for the Ethernet devices here. The device with the switchport property provides the “synchronization” of TCP/IP fragments in the EtherCAT traffic and as a result prevents the real time in the network being affected. STOBER uses the EoE protocol for Ethernet data traffic of the DriveControlSuite and the AutomationControlSuite.

PROFINET

In preparation.

7 Approvals

- CE, UL, CSA
- Type examination by the Institute for Occupational Safety (IFA)

Integrated safety technology as per:

8 Integration in the product range

The newly designed multi-axis drive system is suitable for integration in complete automation solutions of STOBER – from the geared motor to the controller.

- Simple connection to the CODESYS-V3-based MC6 motion controller with the aid of the AutomationControlSuite
- Alternatively: commissioning without higher-level controller with the DriveControlSuite configuration software and commissioning software

9 Competition

9.1 B&R

ACOPOS P3

Advertising message

“The 3-axis servo amplifier provides a power density of 4 Amperes per liter of space requirement and is therefore one of the most efficient servo amplifiers [...]"

Valid for the following boundary conditions:

- DC link voltage 560 V_{DC}
- Switching frequency 5 kHz
- Surrounding temperature 40 °C
- Installation height < 500 m above sea level

Argumentation aid

The SI6 double axis controller provides a power density of up to 3.8 Amperes per liter.

BUT under the following boundary conditions:

- DC link voltage 560 V_{DC}
- Surrounding temperature 45 °C
- Installation height < 1000 m above sea level

Drive controller values are therefore absolutely comparable!

Higher output currents are possible for double axis controllers with an asymmetrical load distribution.

9.2 Beckhoff

AX8000

Advertising message

- “The EtherCAT-based AX8000 multi-axis servo system combines powerful FPGA technology with multicore ARM processors.”
- “The modules are connected without screws or tools using the integrated AX-Bridge quick connection system based on spring-loaded terminals.”

AX5000

Advertising message

- For multi-axis applications
- Low hardware costs
- Small construction volumes

Features

- Single axis controller – digital compact servo amplifier (1 channel):
  - Nominal currents: 1.5 A to 170 A (from 60 A based on final stages from LTI Motion)
  - Peak currents: 4.5 A to 225 A
  - All current specifications for a 50 °C surrounding temperature
- Double axis controller – digital compact servo amplifier (2 channels):
  - Nominal currents: 1.5 A to 6 A
  - Peak currents: 4.5 A to 13 A
- Communication only via EtherCAT
- DC link connection and connection of 24 vdc power supply via AX-Bridge at the front
- Encoder interfaces: TTL, BISS analog, BISS C, EnDat 2.1/2.2, HIPERFACE, SSI, HTL, OCT (HIPERFACE DSL in hybrid cable)

Argumentation aid

- All AX5000s with integrated power unit, no separate supply module available
- External braking resistor only without connected AX-Bridge possible
- No double axis controller with nominal current larger than 6 A
- Sizes with more than 40 A can no longer be connected via AX-Bridge
- Application of the drive controllers is always Controller Based; no drive-based functionality
  - Cyclic Synchronous Position: other applications must be adapted to this application in the controller

9.3 Lenze

i700

Features

- Cycle times
  - Current controller: 62.5 µs **(SI6: 62.5 µs)**
  - Velocity controller: 125 µs **(SI6: 62.5 µs)**
  - Position controller: 250 µS **(SI6: 62.5 µs)**
- Signal resolution: 32 bit **(SI6: 64 bit)**
- STO integrated, SS1 via external safety switching device **(SI6: STO via terminals and FSoE)**
- Controller Based and also Drive Based **(= SI6)**
- Controlled field weakening for asynchronous and synchronous servo motors **(= SI6)**
- Multi-axis systems with simple connection technology at the front; only simple plastic cover for touch protection
- EtherCAT as an integrated bus system
- Different cooling concepts: cold plate, through-hole technology and installation technology
- Terminals are supplied as separate sets. 50 % discount when ordering 50 terminal strips

- Encoder systems: resolver, HIPERFACE analog **(SI6: EnDat 2.2, HIPERFACE DSL, resolver, SSI, incremental encoder TTL)**
- Small width for small installation surface area
- Operation of AC motors and synchronous servo motors
- Combination of supply modules as well as single and double axis controllers **(= SI6)**
- Fast cabling using pluggable terminals **(= SI6)**
- Automatic parameter and firmware download

Design	1: 260 × 50 × 350 mm		2: 260 × 100 × 350 mm	
E70ACMSE...4SA2ETR	**..005..**	**..010..**	**..020..**	**..032..**
Maximum current (3 s)	5 A	10 A	20 A	32 A
Rated current (3~, 4 kHz)	2.5 A	5 A	10 A	16 A
Continuous apparent power (400 V)	1.6 kVA	3.3 kVA	6.6 kVA	10.5 kVA
Typ. motor power (ASM)	1 kW	2 kW	4 kW	7.5 kW
Design	1	1	2	2

Tab. 10: Electrical data, Lenze double axis controller

Design	1: 260 × 50 × 350 mm			2: 260 × 100 × 350 mm		
E70ACMSE...4SA1ETR	**..005..**	**..010..**	**..020..**	**..032..**	**..048..**	**..064..**
Maximum current (3 s)	5 A	10 A	20 A	32 A	48 A	64 A
Rated current (3~, 4 kHz)	2.5 A	5 A	10 A	16 A	24 A	32 A
Continuous apparent power (400 V)	1.6 kVA	3.3 kVA	6.6 kVA	10.5 kVA	15.8 kVA	21.1 kVA
Typ. motor power (ASM)	1 kW	2 kW	4 kW	7.5 kW	11 kW	15 kW
Design	1	1	2	2	2	2

Tab. 11: Electrical data, Lenze single axis controller

- Supply modules with integrated brake chopper
- Nominal connection voltage: 3 × 180 … 528 V_{AC} (IT, TT, TN networks)
- Two supply modules for parallel operation (100 A)
- Integrated filter for class C3

Type / Width	1 / 50 mm	2 / 100 mm
E70ACPSE...4S	**..030..**	**..060..**
Rated current (DC)	30 A	60 A
Maximum current (DC)	60 A	120 A
Rated power (400 V)	15 kW	30 kW

Tab. 12: Electrical data, Lenze supply modules

- Maximum current using DC link connection on the front: 100 A
- PE connection using hook elements at the bottom of the device
  - Hook elements must be bolted with 5 Nm: error-prone as a loose screw can lead to sporadic errors in the DC group
- STO safety function via terminals as standard
  - Previously only available as press information: “… For the realization of advanced safety concepts, in the future a device version will be available that offers SS1, SS2, SOS, SLS, SDI, SLI, for example, and achieves the highest safety level (SIL 3, PL e) via EtherCAT (FSoE)."
- Tool can be tunneled through via EtherCAT (EoE is specified)
- Lenze i700 can be combined with Lenze 9400VR modules (supply and feedback modules)
- For Drive Based applications, the i700 and 9400 series can be connected to the same DC link; but the DC link fuses must be set to 9400

10 Marketing measures

- EPLAN P8 Makros
- STEP files
- Brochures
- Catalog (Q4/2016)
- Presentations
- KNA
- SERVOsoft (database extension)
- PS6 design using SI6 load profiles
- References

11 Infrastructure

- SAP version configuration
- Availability
- Price list

12 Extensive documentation

The documentation listed in the following table provides additional relevant information about the multi-axis drive system. You can find the latest document versions at http://www.stoeber.de/en/stoeber_global/service/service.html.

Device/Software	Documentation	Contents	ID
Multi-axis drive system with SI6 and PS6	Manual	System setup, technical data, storage, installation, connection, commissioning, operation, service, diagnostics	442728
MC6 Motion Controller	Manual	Technical data, installation, commissioning, diagnostics	442461
Application CiA 402 Controller Based (CiA CB)	Manual	Project set-up, project configuration, parameterization, function test, further information	442454
Application CiA 402 Drive Based (CiA DB)	Manual	Project set-up, project configuration, parameterization, function test, further information	442708
Application STOBER Drive Based (STOBER DB)	Manual	Project set-up, project configuration, parameterization, function test, further information	442706
Safety technology SR6 – STO via terminals	Manual	Technical data, installation, commissioning, diagnostics	442741
Safety technology SY6 – STO and SS1 via FSoE	Manual	Technical data, installation, commissioning, diagnostics	442744
EtherCAT communication	Manual	Installation, electrical installation, data transfer, commissioning, detailed information	442516

04/2017 | ID 442779.01

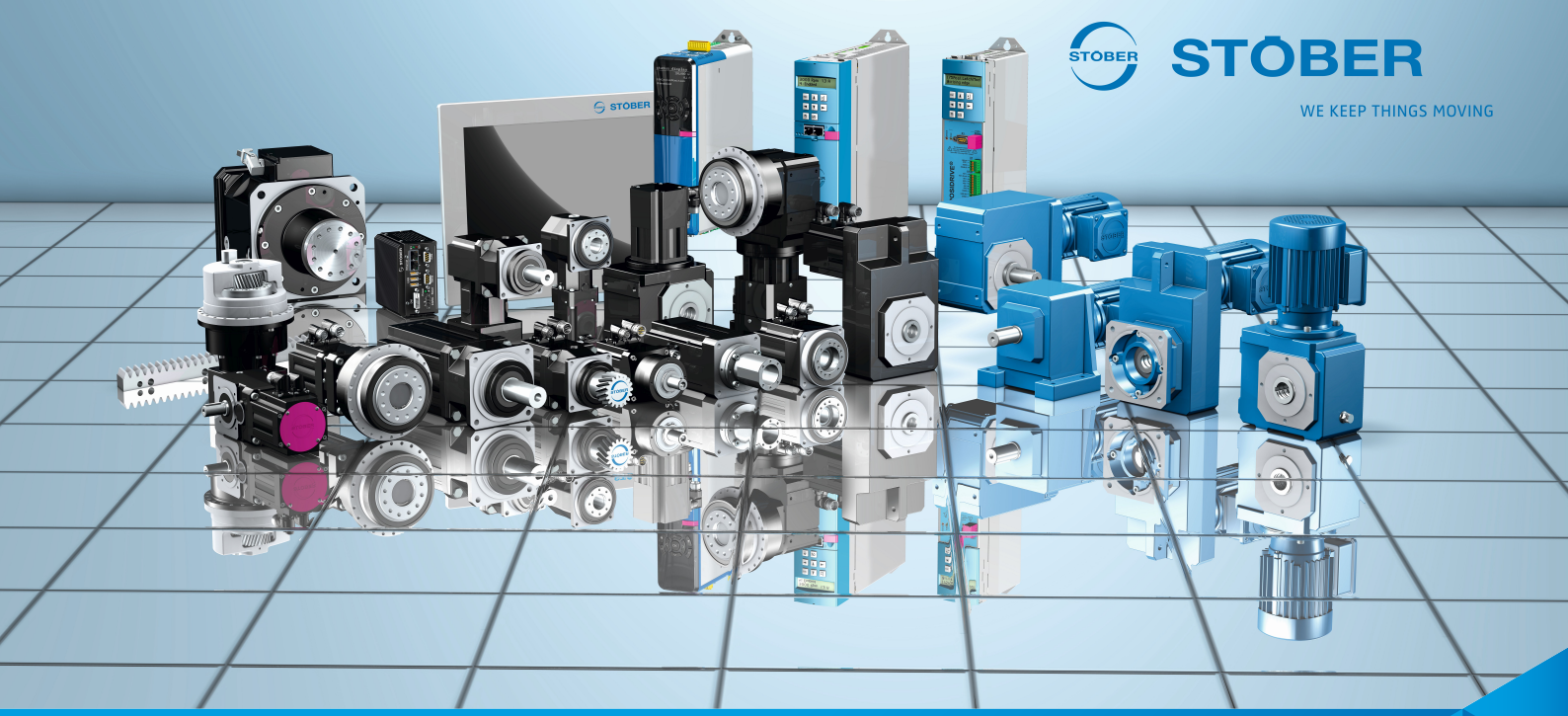

Technische Änderungen vorbehalten.
Errors and changes excepted.

ID 442779.01
04/2017

STÖBER ANTRIEBSTECHNIK GmbH & Co. KG
Kieselbronner Str. 12
75177 Pforzheim
Germany
Tel. +49 7231 582-0
mail@stoeber.de
www.stober.com

24 h Service Hotline +49 7231 582-3000