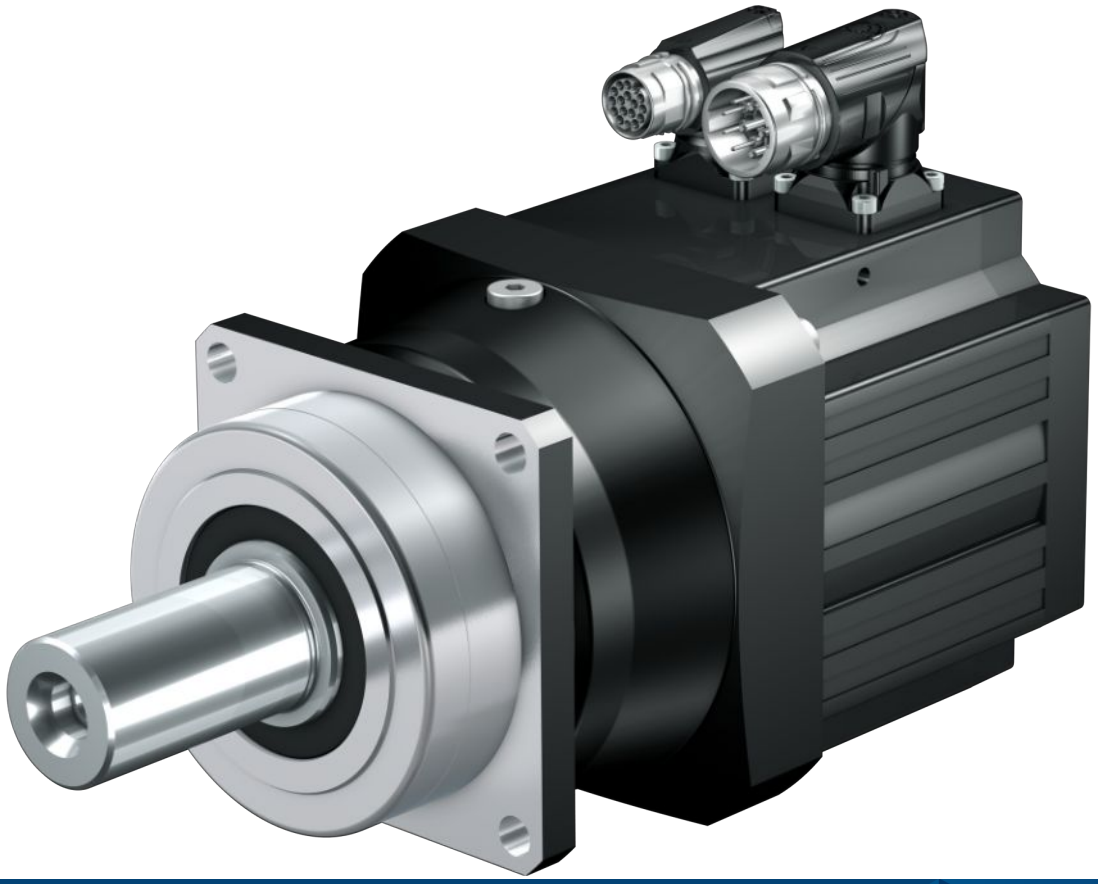

EZ Motors in combination with Unidrive/Digitax from Control Techniques
Information on compatibility

en-US
03/2026
ID 443487_en.01

STÖBER

Table of contents

1 Foreword ... 3

2 User information ... 4

2.1 Timeliness ... 4

2.2 Original language ... 4

2.3 Limitation of liability ... 4

2.4 Formatting conventions ... 4

2.4.1 Distinction of text elements ... 4

2.5 Trademarks ... 5

3 Connection ... 6

3.1 Possible combinations with drive controllers ... 6

3.2 Encoder ... 6

3.3 Resolver ... 7

3.4 Two-cable solution ... 7

3.4.1 Terminal assignment of the power plug connector ... 7

3.4.2 Terminal assignment of the encoder plug connector ... 8

3.4.3 Plug connectors ... 9

3.5 One Cable Solution ... 11

3.5.1 Terminal assignment for plug connectors (One Cable Solution) ... 11

3.5.2 Plug connectors (One Cable Solution) ... 11

4 Commissioning ... 13

4.1 Parameterizing the motor ... 13

5 Appendix ... 14

5.1 Further information ... 14

5.2 Abbreviations ... 14

6 Contact ... 15

6.1 Consultation, service and address ... 15

6.2 Your opinion is important to us ... 15

6.3 Close to customers around the world ... 16

03/2026 | ID 443487_en.01

1 Foreword

STOBER synchronous servo motors of the EZ series can be operated with drive controllers from a wide range of manufacturers – for example, with Unidrive and Digitax servo inverters from Control Techniques (hereinafter referred to as drive controllers).

The encoders, temperature sensors, plug connectors and terminal assignments of the STOBER motors are fully compatible with the aforementioned drive controllers. We recommend using only original cables from Control Techniques.

03/2026 | ID 443487_en.01

2 User information

This documentation contains information on the compatibility of STOBER synchronous servo motors of the EZ series with Unidrive and Digitax drive controllers from Control Techniques. The relevant operating manual applies to installation, connection and commissioning.

2.1 Timeliness

Check whether this document is the latest version of the documentation. We make the latest document versions for our products available for download on our website:
http://www.stoeber.de/en/downloads/.

2.2 Original language

The original language of this documentation is German; all other language versions are derived from the original language.

2.3 Limitation of liability

This documentation was created taking into account the applicable standards and regulations as well as the current state of technology.

No warranty or liability claims for damage shall result from failure to comply with the documentation or from use that deviates from the intended use of the product. This is especially true for damage caused by individual technical modifications to the product or the project configuration and operation of the product by unqualified personnel.

2.4 Formatting conventions

Orientation guides in the form of signal words, symbols and special text markups are used to emphasize specific information so that you are able identify it in this documentation quickly.

2.4.1 Distinction of text elements

Certain elements of the continuous text are distinguished as follows.

Important information	Words or expressions with a special meaning
Interpolated position mode	Optional: File or product name or other name
Detailed information	Internal cross-reference
http://www.samplelink.com	External cross-reference

03/2026 | ID 443487_en.01

2.5 Trademarks

The following names used in connection with the device, its optional equipment and its accessories are trademarks or registered trademarks of other companies:

Control Techniques®	Control Techniques® is a registered trademark of Nidec Control Techniques Limited, UK.
EnDat®	EnDat® and the EnDat® logo are registered trademarks of Dr. Johannes Heidenhain GmbH, Germany.

All other trademarks not listed here are the property of their respective owners.

Products that are registered as trademarks are not specially indicated in this documentation. Existing property rights (patents, trademarks, protection of utility models) are to be observed.

03/2026 | ID 443487_en.01

3 Connection

The terminal assignment for plug connectors of STOBER synchronous servo motors of the EZ series is identical to that of motors from Control Techniques. The customer can therefore obtain and connect corresponding original cables from Control Techniques. STOBER does not offer connection cables for Control Techniques drive controllers, but can recommend a suitable cable family on request.

3.1 Possible combinations with drive controllers

The following table shows the possible combinations of STOBER synchronous servo motors with drive controllers from Control Techniques depending on the encoder model.

Drive controller		**Unidrive** EnDat 2.1/Resolver	**Digitax OCS** EnDat 2.2
Drive controller code		GE	HH
Connection plan ID		442555	443177
Encoder	**Encoder code**		
EnDat 2.2 EQI 1131 Safety	S2	–	EZ
EnDat 2.2 EQN 1135 Safety	S3	–	EZ
EnDat 2.1 EQN 1125	Q4	EZ	–
EnDat 2.1 ECI 1118-G3	C2	EZ	–
EnDat 2.1 EQI 1130-G3	Q2	EZ	–
Resolvers	R0	EZ	–

The encoder and drive controller codes are a part of the type designation of the motor.

3.2 Encoder

Encoders with EnDat 2.2 interface

Encoder model	Code	Measuring method	Recordable revolutions	Resolution	Position values per revolution	MTTF [years]	PFH [h]
EnDat 2.2 EQI 1131 Safety	S2	Inductive	4096	19 bit	524288	> 100	$\leq 15 \times 10^{-9}$
EnDat 2.2 EQN 1135 Safety	S3	Optical	4096	23 bit	8388608	> 100	$\leq 15 \times 10^{-9}$

Encoders with EnDat 2.1 interface

Encoder model	Code	Measuring method	Recordable revolutions	Resolution	Position values per revolution	Periods per revolution	MTTF [years]	PFH [h]
EnDat 2.1 EQN 1125	Q4	Optical	4096	13 bit	8192	Sin/cos 512	> 57	$\leq 2 \times 10^{-6}$
EnDat 2.1 ECI 1118-G3	C2	Inductive	–	18 bit	262144	Sin/cos 16	> 100	$\leq 6 \times 10^{-7}$
EnDat 2.1 EQI 1130-G3	Q2	Inductive	4096	18 bit	262144	Sin/cos 16	> 100	$\leq 6 \times 10^{-7}$

03/2026 | ID 443487_en.01

Notes

- The encoder code is a part of the type designation of the motor.
- Safety = Safety-related position measuring system for use in safety-oriented applications.
- Multiple revolutions of the motor shaft can be recorded only using multi-turn encoders.

3.3 Resolver

In this chapter, you can find detailed technical data for the resolver that can be installed as an encoder in a STOBER motor.

Feature	Description
Code	R0
Number of poles	2
Input voltage U_{1eff}	7 V ± 5%
Input frequency f_1	10 kHz
Output voltage $U_{2,S1–S3}$	$K_{tr} \cdot U_{R1–R2} \cdot \cos \theta$
Output voltage $U_{2,S2–S4}$	$K_{tr} \cdot U_{R1–R2} \cdot \sin \theta$
Transformation ratio K_{tr}	0.5 ± 5%
Electrical fault	±10 arcmin
MTTF	> 100 years
PFH	$\leq 10^{-9}$

3.4 Two-cable solution

3.4.1 Terminal assignment of the power plug connector

The size and connection diagram of the power plug connector depend on the size of the motor.

Plug connector size con.23

Connection diagram	Pin	Connection
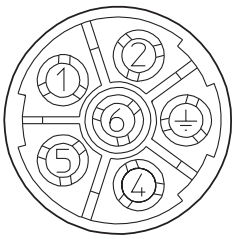	1	1U1 (U phase)
	2	1V1 (V phase)
	4	1W1 (W phase)
	5	1BD1 (brake +)
	6	1BD2 (brake –)
	⏚	PE (grounding conductor)

03/2026 | ID 443487_en.01

Plug connector size con.40

Connection diagram	Pin	Connection
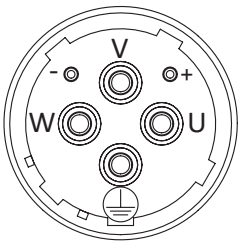	U	1U1 (U phase)
	V	1V1 (V phase)
	W	1W1 (W phase)
	+	1BD1 (brake +)
	–	1BD2 (brake –)
	⏚	PE (grounding conductor)

3.4.2 Terminal assignment of the encoder plug connector

The size and terminal assignment of the encoder plug connectors depend on the model of encoder installed and the size of the motor.

EnDat 2.1 encoder with sin/cos incremental signals, plug connector size con.23

Connection diagram	Pin	Connection
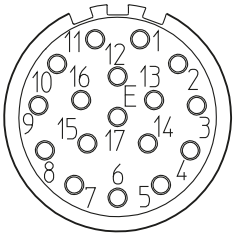	1	1TP1 (temperature sensor +)
	2	1TP2 (temperature sensor –)
	3	
	4	
	5	
	6	
	7	
	8	Clock +
	9	Clock –
	10	A + (Cos +)
	11	Data +
	12	Data –
	13	A – (Cos –)
	14	B + (Sin +)
	15	B – (Sin –)
	16	Up +
	17	0 V GND

03/2026 | ID 443487_en.01

Resolver, plug connector size con.23

Connection diagram	Pin	Connection
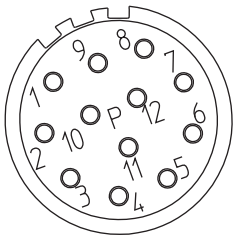	1	R2 Ref +
	2	R1 Ref –
	3	S3 Cos +
	4	S1 Cos –
	5	S4 Sin +
	6	S2 Sin –
	7	1TP1 (temperature sensor +)
	8	1TP2 (temperature sensor –)
	9	
	10	
	11	
	12	

3.4.3 Plug connectors

STOBER synchronous servo motors are equipped with angled, round plug connectors (INTERCONTEC brand) for power and encoder connection in the standard version. You can find detailed technical information about the plug connectors at http://www.intercontec.biz.

For motors with forced ventilation, avoid collisions between the motor connection cables and the plug connector of the forced ventilation unit. In the event of a collision, turn the motor plug connectors accordingly.

STOBER uses PTC or Pt1000 temperature sensors, which are selected to match the actuator. In a two-cable solution, the temperature sensor connections are routed via the encoder plug connector.

The figures represent the position of the plug connectors upon delivery.

Turning ranges of plug connectors (EZ2 – EZ3 motors)

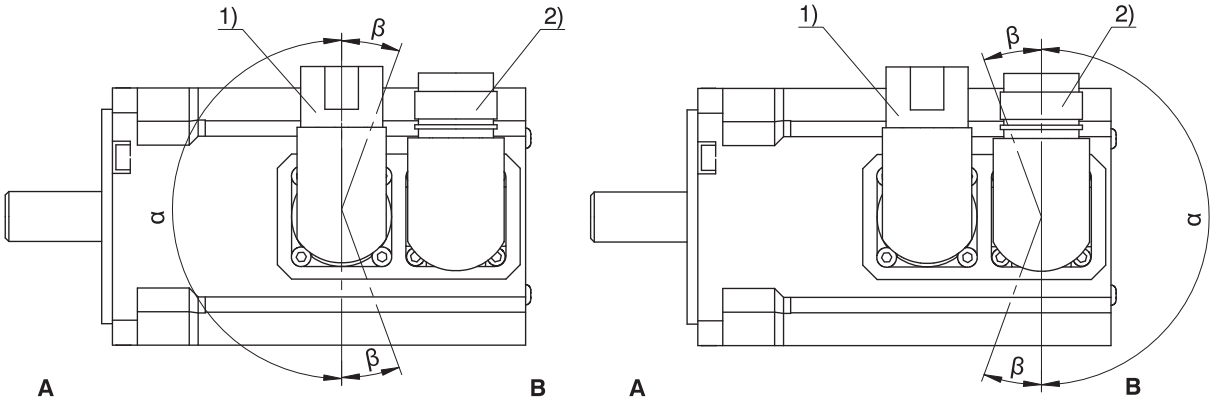

Turning ranges of plug connectors (EZ4 – EZ8 motors)

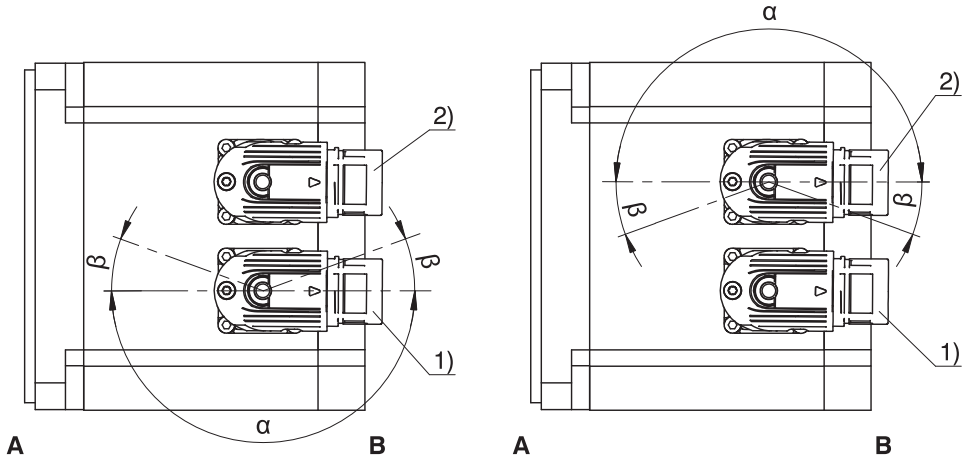

1	Power plug connector	2	Encoder plug connector
A	Attachment or output side of the motor	B	Not output side

Power plug connector features

Motor type	Size	Connection	Turning range	
			α	β
EZ2, EZ3	con.23	Quick-lock	180°	120°
EZ4, EZ5, EZ701, EZ702, EZ703	con.23	Quick-lock	180°	40°
EZ705, EZ8	con.40	Quick-lock	180°	40°

Encoder plug connector features

Motor type	Size	Connection	Turning range	
			α	β
EZ2, EZ3	con.23	Quick-lock	180°	120°
EZ4, EZ5, EZ7, EZ8	con.23	Quick-lock	190°	35°

Notes

- The number after "con." indicates the approximate external thread diameter of the plug connector in mm (for example, con.23 designates a plug connector with an external thread diameter of about 23 mm).
- In turning range β, the power or encoder plug connectors can be turned only if doing so does not cause them to collide.

03/2026 | ID 443487_en.01

3.5 One Cable Solution

3.5.1 Terminal assignment for plug connectors (One Cable Solution)

In the One Cable Solution design, the power and encoder lines are connected using a shared plug connector.

The temperature sensor of the motor is connected to the encoder internally. The measured values from the temperature sensor are transmitted via the log of the encoder.

Plug connector size con.23

Connection diagram	Pin	Connection
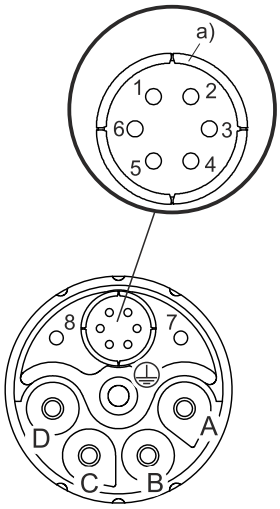	A	1U1 (U phase)
	B	1V1 (V phase)
	C	1W1 (W phase)
	D	
	1	Up +
	2	0 V GND
	3	Data +
	4	Data –
	5	Clock +
	6	Clock –
	7	1BD2 (brake –)
	8	1BD1 (brake +)
	⏚	PE (grounding conductor)
a) Coaxial shield to which the shield of the encoder cores is connected		

3.5.2 Plug connectors (One Cable Solution)

For motors with forced ventilation, avoid collisions between the motor connection cables and the plug connector of the forced ventilation unit. In the event of a collision, turn the motor plug connectors accordingly.

The figures represent the position of the plug connectors upon delivery.

Turning ranges of plug connectors (EZ2 – EZ3 motors)

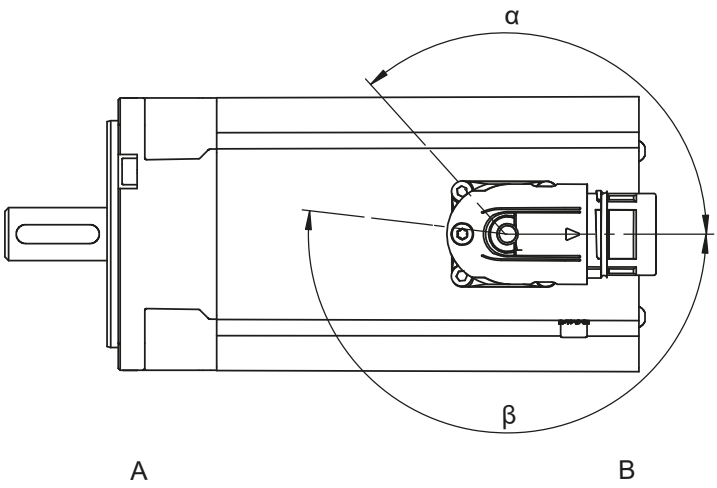

A	Attachment or output side of the motor	B	Not output side

Turning ranges of plug connectors (EZ4 – EZ7 motors)

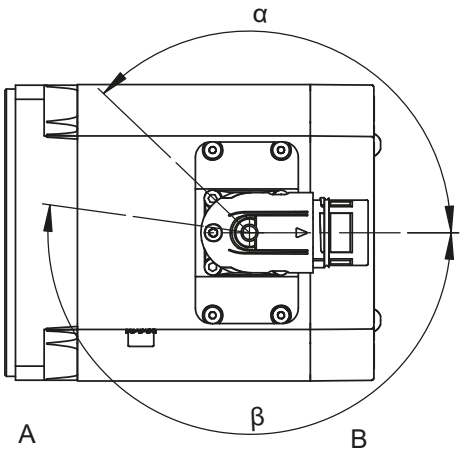

A	Attachment or output side of the motor	B	Not output side

Plug connector features

Motor type	Size	Connection	Turning range	
			α	β
EZ2 – EZ5, EZ701 – EZ703, EZ705U	con.23	Quick-lock	130°	190°

Notes

- The number after "con." indicates the approximate external thread diameter of the plug connector in mm (for example, con.23 designates a plug connector with an external thread diameter of about 23 mm).

03/2026 | ID 443487_en.01

4 Commissioning

Only put the motor into operation if you have reviewed its installation and connection in accordance with the associated operating manual, as well as all other necessary requirements specific to your system. In addition, follow the instructions for commissioning your drive controller in the third-party manufacturer's documentation.

4.1 Parameterizing the motor

After the motor has been installed and connected to the corresponding drive controller, parameterization takes place in the Control Techniques commissioning software Connect.

As a specific parameterization list is required for this, please contact STOBER System Support at systemsupport@stoeber.de and send either your order number or the series, size and type designation of the motor as well as the type of drive controller used. You will receive the requested list immediately by e-mail.

The electronic nameplate of STOBER motors is not read out by Control Techniques drive controllers. Only the commutation offset is stored in the encoder memory and can be read out by the drive controller.

Information

The commutation offset of the motor comes from the factor set in such a way that calibration by the customer is not necessary.

03/2026 | ID 443487_en.01

5 Appendix

5.1 Further information

The documentation listed below provides you with further relevant information on the motors. The current status of the documentation can be found in our download center at:
http://www.stoeber.de/en/downloads/.
Enter the ID of the documentation in the search.

Title	Documentation	Contents	ID
Synchronous Servo Motors EZ	Operating manual	Technical data, transport and storage, installation, connection, commissioning, service	443032_en

The documentation for the drive controllers and a current version of the Connect commissioning software are available in the download area of Control Techniques under:
https://acim.nidec.com/en-US/drives/control-techniques/downloads/user-guides-and-software.

5.2 Abbreviations

Abbreviation	Meaning
GND	Ground
OCS	One Cable Solution
PE	Protective Earth (grounding conductor)
PTC	Positive Temperature Coefficient

03/2026 | ID 443487_en.01

6 Contact

6.1 Consultation, service and address

We would be happy to help you!

We offer a wealth of information and services to go with our products on our website:
http://www.stoeber.de/en/service

For additional or personalized information, contact our consultation and support service:
http://www.stoeber.de/en/support

If you need our system support:
Phone: +49 7231 582-3060
systemsupport@stoeber.de

If you need a replacement device:
Phone: +49 7231 582-1128
replace@stoeber.de

Call our 24-hour service hotline:
Phone: +49 7231 582-3000

Our address is:
STÖBER Antriebstechnik GmbH + Co. KG
Kieselbronner Strasse 12
75177 Pforzheim, Germany

6.2 Your opinion is important to us

We created this documentation to the best of our knowledge with the goal of helping you build and expand your expertise productively and efficiently with our products.

Your suggestions, opinions, wishes and constructive criticism help us to ensure and further develop the quality of our documentation.
If you want to contact us for a specific reason, we would be happy to receive an e-mail from you at:
documentation@stoeber.de

Thank you for your interest.
Your STOBER editorial team

03/2026 | ID 443487_en.01

6.3 Close to customers around the world

We offer you committed, expert advise and support in over 40 countries worldwide:

STOBER AUSTRIA
www.stoeber.at
+43 7613 7600-0
sales@stoeber.at

STOBER FRANCE
www.stober.fr
+33 478 98 91 80
sales@stober.fr

STOBER ITALY
www.stober.it
+39 02 93909570
sales@stober.it

STOBER KOREA
www.stober.kr
+82 10 5681 6298
sales@stober.kr

STOBER SWITZERLAND
www.stoeber.ch
+41 56 496 96 50
sales@stoeber.ch

STOBER TURKEY
www.stober.com
+90 216 510 2290
sales-turkey@stober.com

STOBER USA
www.stober.com
+1 606 759 5090
sales@stober.com

STOBER CHINA
www.stoeber.cn
+86 512 5320 8850
sales@stoeber.cn

STOBER Germany
www.stoeber.de
+49 7231 582-0
sales@stoeber.de

STOBER JAPAN
www.stober.co.jp
+81-3-5875-7583
sales@stober.co.jp

STOBER SWEDEN
www.stober.com
+46 702 394 675
neil.arstad@stoeber.de

STOBER TAIWAN
www.stober.tw
+886 4 2358 6089
sales@stober.tw

STOBER UK
www.stober.co.uk
+44 1543 458 858
sales@stober.co.uk

03/2026 | ID 443487_en.01

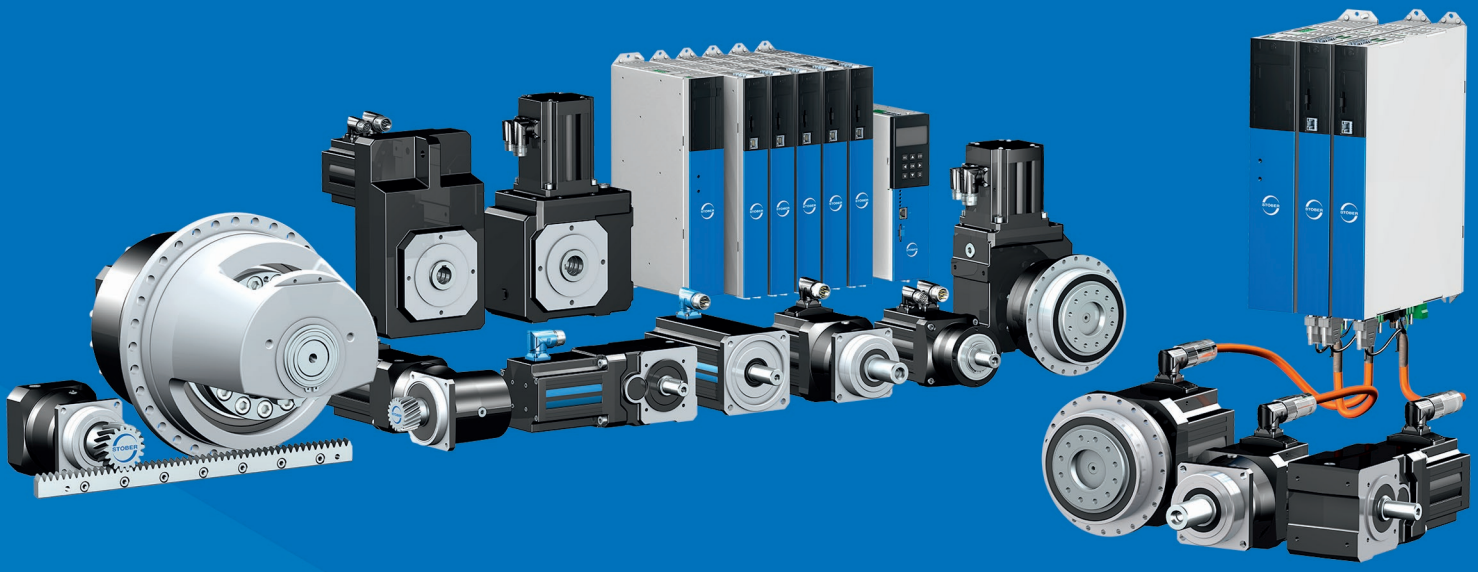

443487 EN.01

03/2026

STÖBER Antriebstechnik GmbH + Co. KG
Kieselbronner Str. 12
75177 Pforzheim
Germany
Tel. +49 7231 582-0
mail@stoeber.de
www.stober.com

24 h Service Hotline
+49 7231 582-3000