STÖBER

SERVO GEARBOXES

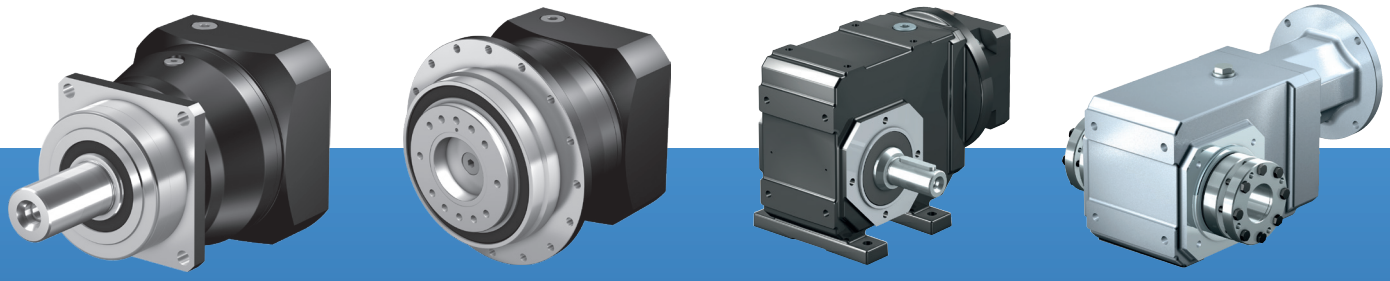

Optimize Without Compromise!

Servo Gear Units





Welcome to STOBER!

Thank you for your interest in the servo gear reducers offered by STOBER Drives, Inc.!

In 1934, the Stöber brothers founded a small shop in Pforzheim, Germany that made machines and repaired engines. Today, STOBER is an international organization with offices in ten countries.

This 80 year heritage has given us expertise in servo gearing for which STOBER is recognized worldwide as the "gold standard." STOBER products are of the highest quality and use only the best components.

This catalog covers our comprehensive servo gearbox products — Servo Precision Planetary and Modular Gearheads. STOBER is recognized across the United States for its solution design, product durability, and service support. We look forward to the opportunity to work with you, and to help with your servo gearing needs.

Peter Feil, General Manager, STOBER Drives, Inc.

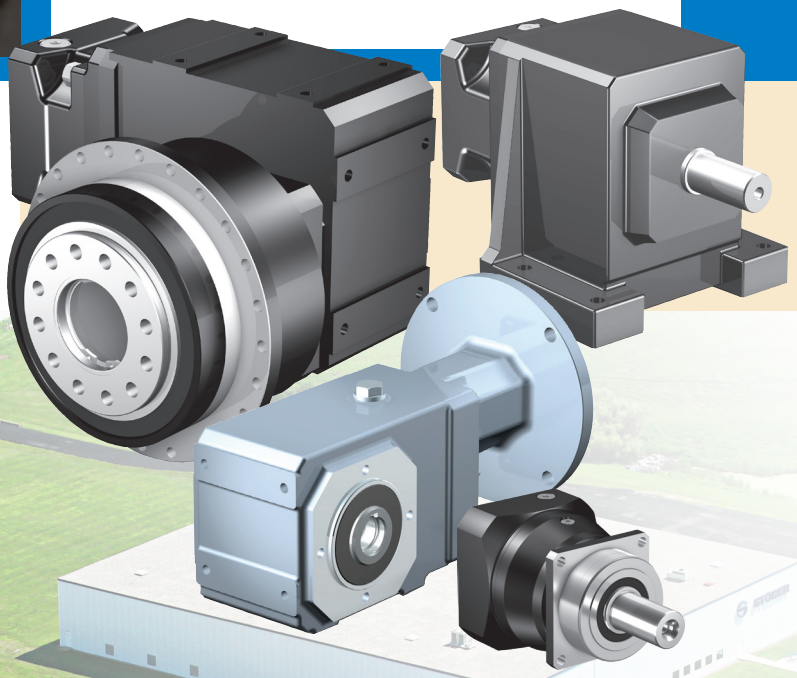

STOBER Drives Inc. was founded in 1991. Our Maysville, Kentucky campus includes 85,000 square feet of sales and service offices, assembly, manufacturing, and warehousing space for German-engineered STOBER products for 1 day shipment nationwide.

Contents

About STOBER Drives		4-5
Servo Gear Units Features		6-7
Servo Gear Units Overview At-a-Glance		8-9
Servo Gear Units Sizing/Selection		10-11
Inline & Offset Gearhead Series	**P**	14
	PH	28
	PHQ	44
	PE	62
	C	72
	F	102
Right Angle Gearhead Series	**K/KL**	120
	PKX	164
	PK	184
	PHKX	204
	PHK	218
	PHQK	236
	KS	258
	KSS	272
Technical Reference		286-307
Terms & Conditions of Sale		290
Other STOBER Drive Products		291

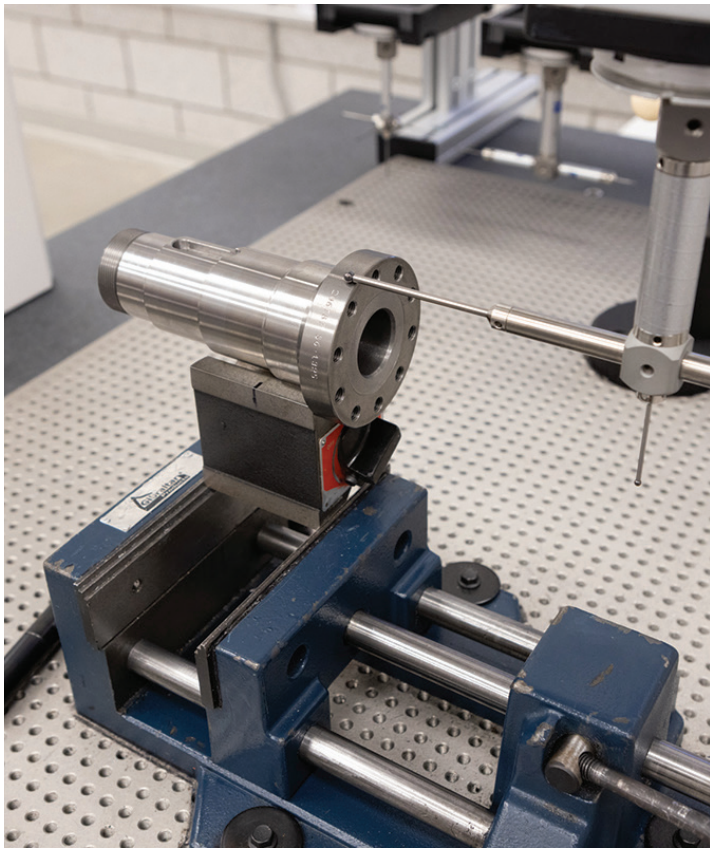

All manufactured components are inspected before being released to assembly. Our quality inspection team ensures every part meets tolerances and is in spec.

Unsurpassed:

STOBER products are designed and built to perform for the toughest applications. Reliability, adaptability and maintainability are our focus, and durability is truly our trademark.

Solution Designs that build quality around every requirement.

Product Durability that enhances the reliability and life of every application.

Service Support that is empowered to meet and exceed client expectations.













STOBER Serviced Industries:

Beverage
Food Processing
Packaging
Machine Tool
Robotics
Material Handling
Semiconductor
Printing
Converting and many others...

Servo Gear Units

The Best you Can Buy...

At STOBER, offering the best is not a buzz word — it is our passion and way of life. We offer the best product, provided by the best people and processes, and backed by the best service.

Why is STOBER considered the industry Gold Standard? Our products are backed with superior service, outstanding quality, and the STOBER guarantee.

- STOBER gearheads survive in the toughest environments, providing long life under extreme conditions. Their high reliability and durability saves non-productive downtime and cost
- Our product reliability is backed by one of the best warranties in the industry
- We build and ship in 1 day saving you inventory hassle and cost
- Adapts to *any* servo motor

The Servo Gear Difference

STOBER has the highest performing custom solutions when space, precision, speed, and/or longevity really matter

- Options for every application
- Most precise and stiffest solution on the market (backlash down to less than 1 arc minute)
- Most compact solution on the market when paired with a geared motor
- Coolest running
- Mounting flexibility
- More ration option to choose from
- Quieter

*** Noise Level**

If a planetary is loud — something is WRONG!

STOBER Servo planetary = 60 dB(A)
Convention spur gear planetary = 70-72 dB(A)

Bottom line: 1 conventional gearhead produces the same noise level as 16 STOBER planetary gearheads with HeliCamber™ gearing

Striving Harder to Deliver the Best Gear Solutions

STOBER Drives has been assembling products at our Maysville, Kentucky facility for over twenty years. Our expertise in the production and assembly of low-backlash gear units produces products that comply with the highest quality standards.

But, we don't remain satisfied with the status quo. We are continuously improving our modern machining production center including numerous recent acquisitions to improve our manufacture time and to ensure maximum quality levels.

All reducer components (gears, covers, material, etc.) are backed by a five year warranty. Normal wear items (oil seals, bearings, etc.) are covered for two years.

Purpose: Deliver peace of mind in the demanding world of motion

Vision: The gold standard for perfect motion

Mission: Seeking the best; operating with integrity; serving others, growth through learning



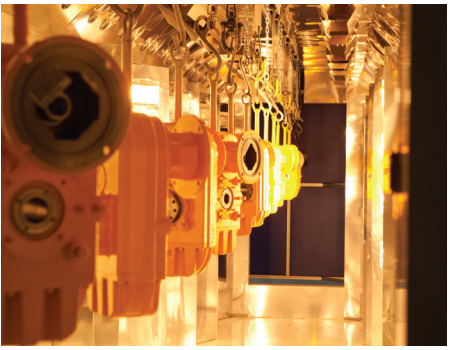



Assembly stages of "F" Series gearheads: Paint curing oven allows for one day assembly and higher paint durability (left); units awaiting final inspection prior to shipment (right).



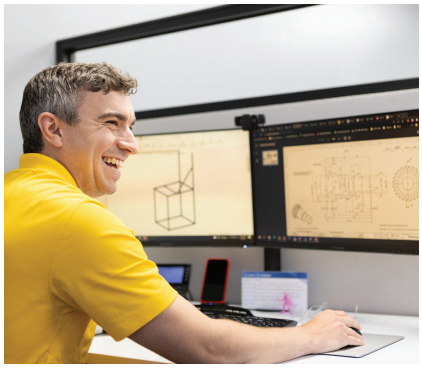



Key STOBER Numbers

Passionate about providing fast delivery and exceptional support

1 day shipping

1 hour quoting

3 rings or less when you call in — we answer the phone, not an automated switchboard!

100% inspected and tested during assembly for seal pressure test and ratio verification. STOBER also observes the reducer for any abnormal noise or vibrations during testing

5 year warranty

24/7 customer service

Service Support for a Lifetime

We stand behind every drive we sell, which is why our service support is also the gold standard in the industry:

We are a trusted extension of your engineering team with unmatched expertise across design, manufacturing, and assembly.

Our easy order method insures you maintain a single contact throughout the process. And, your service representatives are directly responsible for your account. After the sale, our products are easy to install, but if you do have a question or a problem, we provide application and installation support anywhere in the US. With over 80 years gearing & 30 years motor and electronics experience, we have the expertise to solve your most difficult problems.

Application Support Programs

- For support during normal business hours: call 800-711-3588 or email sales@stober.com
- 24/7 emergency customer service hotline: 606.563.6035
- Consultative product support team available via phone or live chat on our website
- Application Sizing Software
- Online web tools: CAD and configurator
- On-site training available
- Emergency shipments available 24/7

STOBER Staff Team Members
Facing page: Wayne Gingerich, Assembler 2012
From top, left to right: Blake Thayer, Product Engineer Team Leader 2018
Nathan Landreth, Industrial Engineer, 2012, Robby Cooper, Machinist, 2012

The Servo Gear Unit Difference

The following outlines some of our quality standards and unique STOBER features that set Servo gearheads apart from all others...

Food and Corrosion Resistant Duty

P PKX PK C F K/KL KSS

Lifetime lubrication; double output seals (where possible); maintenance free design; stainless output bushing, shaft, or bore — finish is USDA approved for food processing and handling; heat cured.

KSS for extreme high pressure food washdown!

- IP69K certified for extreme high pressure food washdown (sprayed at close distance at 100 bars or 1,450 PSI)
- Certified against dust and water ingress
- 304 stainless steel cast housing

Explosion Proof

P PH PHQ PKX PHKX C F K

ATEX is often used in process control and converting where unstable gases and dust can be found

ATEX is a directive consisting of two European directives describing equipment or work environment allowed in an environment with an explosive atmosphere. ATEX derives its name from the ATmospheres EXplosible.

Please consult our product support team for assistance selecting an ATEX gearbox.

Large Input Planetary

P PE PH PHQ KS

Equipping a Servo gearhead with the large input option allows a larger shaft diameter motor to be used, keeping gearhead size and cost down! This input is ideal for inertia matching.

Spiral Groove Hollow Bore

F K KL KS KSS

The inside diameter on our hollow bore units feature a spiral (rifle) bore design providing an anti-seize lubricating groove. This enables the Servo gearhead to slide off freely when servicing without damage to the output shaft. With conventional smooth-surface hollow bore designs, any anti-seize lubricant applied during installation of the output shaft has no where to go except out the other end. Invariably, these designs will seize, making it necessary to cut off the output shaft when servicing.

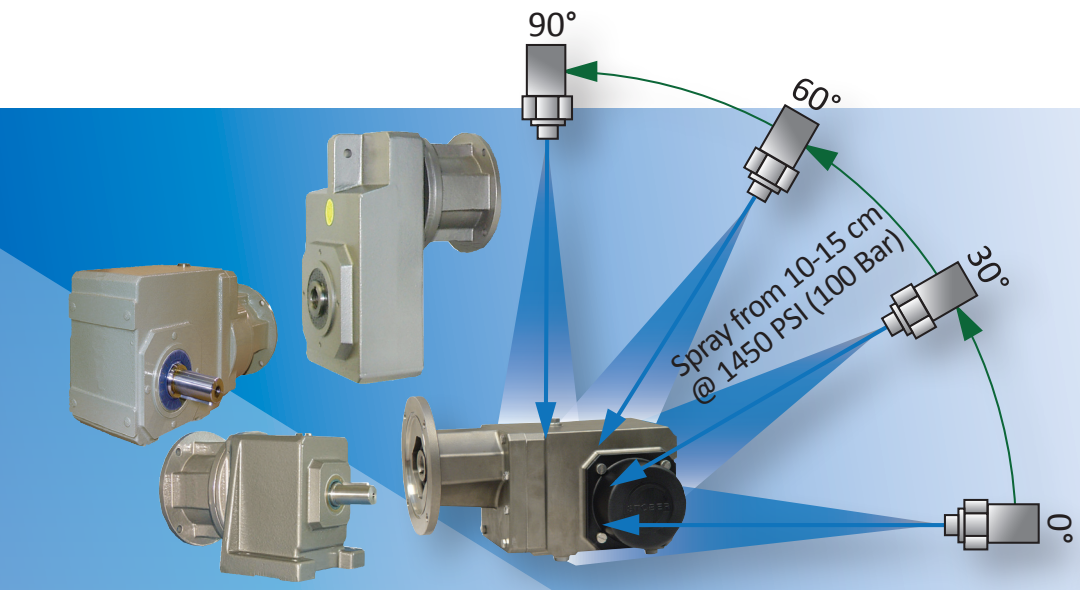

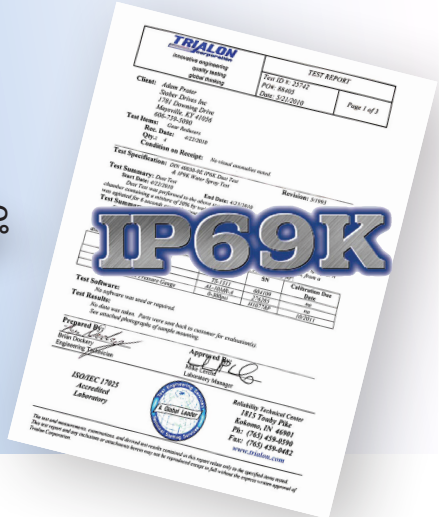

Above: KSS Servo Gearheads are IP69K certified to withstand frequent pressure cleaning operations typical in the food industry and elsewhere. Other STOBER products, including C, F and K Series, are optionally available with IP69K compliant protection.

Wobble Free Bushing

F K KL KSS

The STOBER "Wobble Free" bushing is a unique (U.S. Patent Number 5,496,127), bushing system which can be supplied on a single side or double sides. Each case size can be provided with a variety of bushing bores. The unit is selected based on torque rating, output speed or ratio, and the shaft size of the driven equipment.

- A distinct support side and a clamp side, the dual tapered cones will overcome a wide range of tolerances normally found with standard shaft materials. No shaft key necessary.
- Many unit sizes can be supplied with output covers on one or both sides which protect the seals and also cover the rotating bushing
- The reducer output bore can be changed any time by changing the bushing kit
- The quill, all bushing parts, and hardware can be supplied stainless steel to provide corrosion resistance for washdown applications

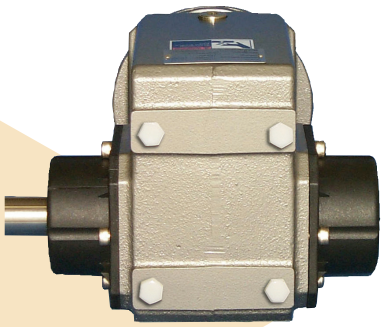

Double Sided Bushing:

This unique design allows the unit to be mounted on the shaft from either side of the reducer by reversing the clamp side and support side bushings. The clamp side is determined by the customer but is usually the easily accessible outside bushing.

The double sided bushing is not installed into the unit at assembly, but with easy-to-follow installation instructions, the unit and bushing can be mounted on the machinery quickly – without any special tools.

Single Sided Bushing :

The single sided bushing is assembled at the time of the order. The bushing side extension must be specified by the customer before assembly. The bushing is installed into the unit for shipping and is not interchangeable once the unit is assembled.

Shrink Ring Connection

F K KL KS

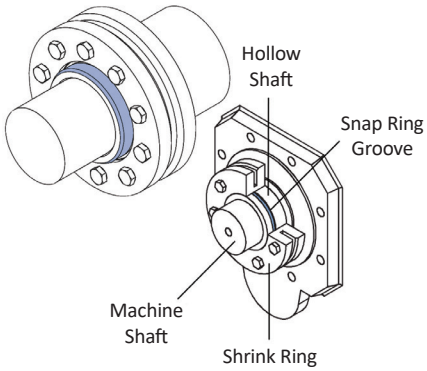

F, K, KL and KS Series gearheads with a hollow bore can be connected to a finished machine drive shaft by frictional engagement through compression of a shrink ring on the hollow shaft.

This shaft-hub connection is totally free of backlash. Because of its self-centering property, it can transmit high torques and axial thrusts with great accuracy.

Gear units supplied with a shrink ring, are shipped with the ring installed on the hollow shaft end, ready for assembly.

See page 291 for More Servo Gearhead Compatible Products...

EZ Series Servo Motors available to fit all Servo gearheads

Rack and Pinion Servo gearhead systems are a ready to install engineered solution for precision automation applications requiring forces up to 122 kN (27,400 lbs.) with linear backlash as low as 7 µm



ServoStop automatic, electrically-actuated integrated holding brake used in place of a servo motor brake for dynamic safety braking, or in conjunction with the servo motor brake for redundancy in safety applications

Servo Gear Units

Inline & Offset Inline Gearheads

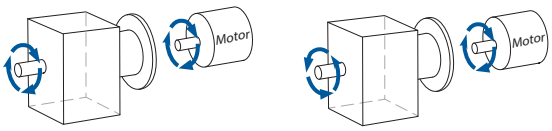

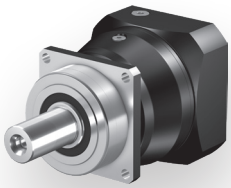

P — Shaft Output *

STOBER P Series is the cornerstone of most of our inline family of precision planetary gearheads. They are the most accurate and efficient planetary gearheads available. HeliCamber® gear technology provides minimum wear, low backlash and low noise.

- 3:1 to 100:1
- Up to 2,483 Nm torque (nom)
- Up to 8,000 RPM input speed
- Backlash: <3 arc min
- Reduced Backlash: <1 arc min



PH/PHQ — Flange Output*

STOBER PH family geaheads offer a rotating flange output version of the P Series.

- 4:1 to 600:1
- Up to 13,000 Nm torque (nom)
- Up to 8,000 RPM input speed
- Backlash: <3 arc min
- Reduced Backlash: <1 arc min



PE — Shaft Output*

STOBER PE Series Servo Precision Planetary Gearheads are available for applications where very low backlash is not a criteria. They are an economical helical tooth planetary, comparable in quality to other STOBER units.

- 3:1 to 100:1
- Up to 160 Nm torque (nom)
- Up to 8,000 RPM input speed
- Backlash: < 8 arc min

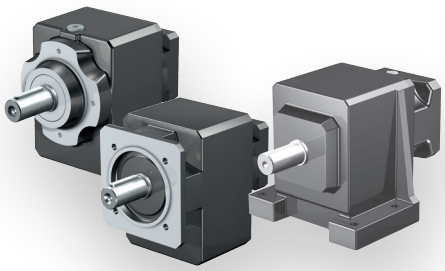

C — Shaft Output*

STOBER C Series gear drives offer performance, durability, and economy for a wide range of applications. High efficiency helical gearing keeps motor size to a minimum while running almost silently.

- 2:1 to 276:1
- Up to 7,000 Nm torque (nom)
- Up to 6,500 RPM input speed
- Backlash: < 14 arc min

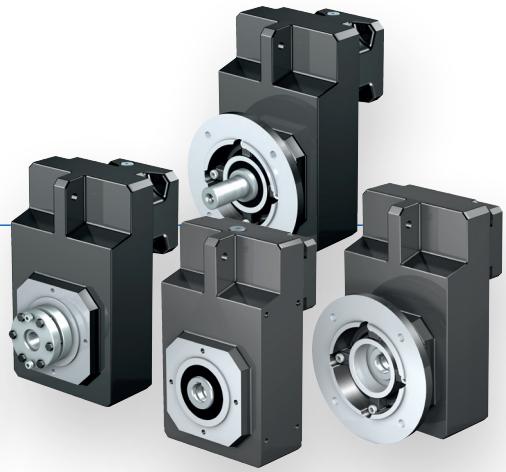

F — Versatile Outputs*

STOBER F Series gear drives are a popular choice for applications that require high performance, efficiency, durability, and flexibility. F Series are available with a wide selection of configurations to match almost any mounting requirement.

- 4:1 to 551:1
- Up to 1,100 Nm torque (nom)
- Up to 7,000 RPM input speed
- Backlash: < 10 arc min

* See page 286 for comparison of all output options and sizes available

Right Angle Gearheads

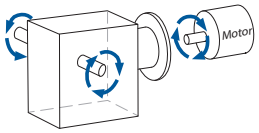

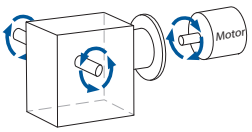

Many right angle gearheads offer output on either or both sides

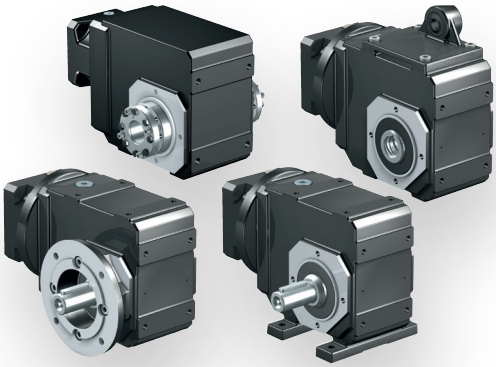

K — Versatile Outputs*

STOBER K Series helical/bevel gear drives are the most popular and versatile Servo right angle gearheads. They are the optimal drive for truly demanding continuous-duty applications, offering higher efficiencies than conventional worm gear drives or planetary gearheads.

- 4:1 to 381:1
- Up to 12,000 Nm torque (nom)
- Up to 7,000 RPM input speed
- Backlash <10 arc min

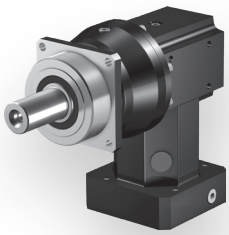

PKX/PK — Shaft Output*

STOBER PKX and PK Series precision planetary gearheads combine the P Series gearhead with the low ratio "KX" right angle platform or the reduced backlash K Series platform.

- Ratios: 3:1 to 300:1;
- Up to 2,000 Nm torque (nom)
- Up to 6,000 RPM input speed
- Backlash: PKX: ≤4 arc min; PK: ≤3.5 arc min

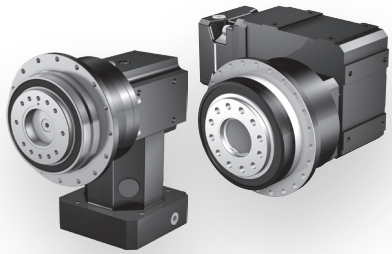

PHKX/PHK/PHQK — Flange Output*

STOBER PH right angle geahead configurations offer a rotating flange output combining the P Series gearhead with the low ratio "KX" or reduced backlash K Series. The PHQK features the "Quattro" power planetary gearing for extreme torque and ratio capabilities.

- 4:1 to 591:1
- Torque: 13,000 Nm (nom)
- Up to 7,000 RPM input speed
- Backlash <3.5 arc min

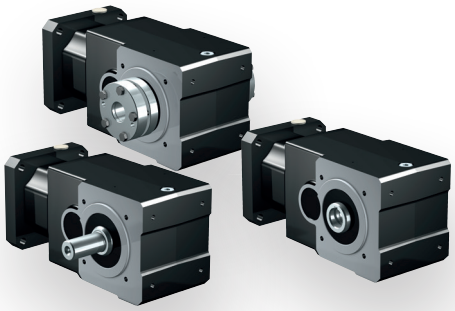

KL — Verstile Outputs*

The STOBER KL Series offers the same output and housing versatility as the K series, but is much more compact and ideal for smaller gearhead size applications.

- 4:1 to 32:1
- Up to 50 Nm torque (nom)
- Up to 6,000 RPM input speed
- Backlash: ≤ 20 arc min

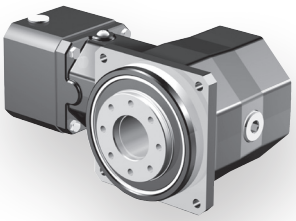

KS — Verstile Outputs*

STOBER KS Series precision planetary gearheads use time-tested helical gearing and finish ground spiral bevel gears to provide a low backlash unit, that is smooth running, with high efficiency, high power density, and high input speed capacity..

- 6:1 to 200:1
- Up to 250 Nm torque (nom)
- Up to 6,000 RPM input speed
- Backlash: < 4 arc min



KSS — Versatile Outputs*

STOBER is proud to offer our quality-proven, high-efficiency KSS Series Helical/Bevel speed reducer in a stainless steel housing necessary for the toughest washdown applications.

- 4:1 to 70:1
- Up to 350 Nm torque (nom)
- Up to 6,000 RPM input speed
- Backlash: < 10 arc min

Servo Gear Units

Versatility

STOBER Drives offers the world's largest variety of gearheads to fit virtually all servo needs.

INLINE & OFFSET INLINE GEARHEADS







Performance, Configurations and Options

		P page 14		PH page 28	PHQ page 44	PE page 62	C page 72	F page 102
Input	Large Input	•	•	•	•	•		
Output (see page 286 for details)	Solid Shaft	•	•			•	•	•
	Hollow Bore							•
	Rotating Flange			•	•			
	Shrink Ring							•
	Single Bushing							•
	Double Bushing							•
Housing	Flange						•	•
	Foot Mount						•	•
	Tapped Holes						•	•
Protection	IP65	•	•	•	•	IP64	•	•
	IP69K Washdown						Opt	Opt
	ATEX Certified	Opt	Opt	Opt	Opt		Opt	Opt
	304SS Housing							
Paint/ Coatings	Standard Black	•	•	•	•	•	•	•
	Food Duty	•					•	•
	Corrosion Resistant Duty						•	•
Added Functionality	ServoStop*	•	•	•			•	•
	Rack and Pinion*	•	•	•		•		
Performance + Good +++ Better +++++ Best	Continuous RPM	+++	+++	++	++	+++	+++	++
	Stiffness	+++	+++	++	+++++	+	+	++++
	Torque Density	+++	+++	++	+++++	+	+	++++
Precision ArcMin Backlash	1	•		Opt	Opt			
	1-3			•	•			
	3-5							
	5-10							Opt
	10-15		•				•	•
	15-20					•		
Nominal Output Torque Ranges Nm	0-50	•	•	•		•	•	•
	50-200	•	•	•		•	•	•
	200-1,000	•	•	•	•	•	•	•
	1,000-5,000	•	•	•	•	•	•	•
	5,000-10,000				•	•	•	
	10,000-23,000				•			

** See page 291 for more information*

STÖBER

RIGHT ANGLE GEARHEADS

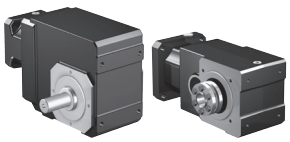



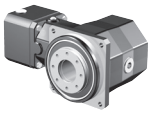


	K	KL	PKX	PK	PHKX	PHK	PHQK	KS	KSS
	page 120		page 164	page 184	page 204	page 218	page 236	page 258	page 272
								•	
	•	•	•	•				•	•
	•	•						•	•
					•	•	•	•	
	•	•						•	
	•	•							•
	•	•							•
	•	•						•	•
	•	•							•
	•	•							•
	•	•	•	•	•	•	•	•	
	Opt	Opt							•
	Opt		Opt		Opt	Opt	Opt	Opt	
									•
	•	•	•	•	•	•	•	•	
	•	•	•	•					
	•	•	•	•					
	•			•		•		•	
	•	•	•	•	•	•	•	•	
	++++	++	+	++	+	++	++	+++	+++
	+	+	+++	++	++++	+++	+++++	++	+
	+	+	+++	++	+++	++	++++	++	+
				•					
	Opt		•		•	•	•	•	
	•								
									•
		•							
	•	•	•		•		•		
	•		•		•		•	•	•
	•		•	•	•	•	•	•	•
	•		•	•	•	•	•		
	•				•		•		
	•						•		

Servo Gear Units Application-Tailored Solutions

Industry	Ideal Gearhead Applications		Recommended STOBER Gearhead
Aerospace	• Automated Guided Vehicles (AGV) • Drilling and Riveting • Machine Tool • Testing and Inspection	• Carbon Fiber Placement • Fuselage • Space Tracking Systems • Wing assembly	Inline: P, PH Right Angle: KS Also: STOBER rack and pinion systems
Automation	• Assembly turn tables • Linear presses • Robotics auxiliary axis • Palletizing	• Custom assembly machines • Radar • Pipe and wire bending	Inline: P, PE, PH Right Angle: K/KL, PKX, KS Also: STOBER rack and pinion systems, and servo brakes
Automotive Manufacturing	• Transfer lines • Robotic auxiliary • Machining • Tire manufacturing • Carbon fiber production	• Metal cutting and bending • Pick and place • Index tables • Electronics assembly	Inline: P, PE, PH Right Angle: K/KL, PKX, KS Also: STOBER rack and pinion systems, and servo brakes
Converting	• Cutting • Tension Control • Web Lines	• Winding • Paper Converting	Inline: P, C, PH Right Angle: K/KL Also: Servo brakes and fans
Machine Tool	• Horizontal and vertical mills • Large gantry cranes • Carbon fiber placement • Flame, laser, water jet, and plasma cutting • Back gauging	• Grinding • X-Y tables • Indexing tables • Chip conveyors • Bending and forming • Tool changers	Inline: P, PH Right Angle: PKX, PHKX, PHK, PHQK, KS Also: STOBER rack and pinion systems, and servo brakes
Material Handling	• Pick and place • Line diverter • Sorting/diverting	• Linear transfer • Palletizing	Inline: PE, C Right Angle: K/KL, F
Medical	• Imaging • Radiation • Centrifuge		Inline: P, C, PH Right Angle: K/KL, F, KS
Packaging	• Continuous or intermittent filling applications		Inline: P, PE, C, PH Right Angle: K/KL, F, PKX, KS
Plastics/ Composites	• Often used to replace hydraulic actuators in injection molding • Injection molding • Carbon fiber placement	• Extrusion lines • Blow molding • Thermoforming • Rubber molding	Inline: P, PH, PHQ Also: STOBER rack and pinion systems
Printing	• Labels • Flexographic printing	• Circuit Boards • Sheet	Inline: P, PH Also: Servo brakes
Robotics	• Delta • Pick and place • Telescoping arms	• Auxiliary axis to rotate and move robot • Positioning axis	Inline: PH, PHQ Also: STOBER rack and pinion systems
Semiconductor	• Wafer polishing • Wafer handling	• Circuit web printing	Inline: P, PH
Valve Control	• Ideal for handling rapid dithering positioning • Ball, gate, and globe valves	• Throttle/governor valves • Chokes • Process valves • ATEX explosion proof available	Inline: P, PH Right Angle: K/KL, F, PKX, PHKX

Sizing/Selection

Use the chart on the facing page and below to determine the best series and the right size gearhead to meet your specific application requirements. In each product section of this catalog, the necessary data and a "Load/Life/Speed Calculation" section are provided to help you work through these equations.

By all means, please feel free to call or email (sales@stober.com), if you have any questions or need assistance determining the best solution for your application.

Cycle Run

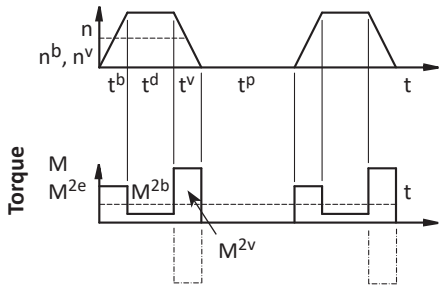

$$M_{2e} = \sqrt[3]{\frac{|n_{2m.1*}| \bullet t_{1*} | \bullet M_{2.1*}{}^3 | + \ldots . + | n_{2m.n*} | \bullet t_{n*} \bullet | M_{2.n*}{}^3}{| n_{2m.1*} | \bullet t_{1*} + \ldots . + | n_{2m.n*} | \bullet t_{n*}}}$$

Service Factor

Apply to Nominal Rating ONLY

Load Factor fB_{op}	P, PE, PH, PHV, PHQ, KS	PKX, PK, PHKX, PHK, PHQK, C, F, K, KSS
Operating Mode		
Continuous	1.0	1.0
Cyclic	1.0	1.25
Cyclic– Reversing	1.0	1.4

Running Time Factor fB_t	
≤8 hours	1.0
≤16 hours	1.15
≤24 hours	1.2

Cyclic Operation	P, PH, PHQ, PE, PKX, PK, PHKX, PHK, PHQK units fB_{ZB}=	C, F, K, KL, KS, KSS units fB_{ZB}=
≤1000 load changes/ hour (LW/h)	1.0	1.0
>1000 load changes/ hour (LW/h)	1.15	1.0

Apply to Input RPM

Temperature Factor f_T	Without Ventilation	Fan Cooled
<20°C	1.00	0.90
<30°C	1.10	1.00
<40°C	1.25	1.15

1 Select Preliminary Reducer Size

ATEX Rated / Explosion Operation
- YES → Please contact STOBER about ATEX rated solutions at sales@stober.com
- NO

2 Determine the Permissible Acceleration Output Torque (M_{2acc})

$$M_{2acc} = J_z \left(\frac{\Delta n}{9.55 \times \Delta t} \right) + M_L$$

$M_{2acc*} \le \frac{M_{2acc*}}{fB_{ZB}}$ and $M_{2eq*} \le \frac{M_{2N}}{fB_{op} \bullet fB_t}$
- NO → Select a Larger Reducer
- YES

3 Determine the Reducer Ratio (i)

$n_{im} \le n_{1maxDB/fBT}$ and $n_{imax} \le n_{1maxZB/fBT}$
- NO → Select a Smaller Ratio (and larger motor, if needed)
- YES

4 Determine the Peak Torque (M_{2NOT})

$M_{2NOT} \le M_{2NOT}$
- NO → Select a Larger Reducer
- YES

$F_{2ax*} \le F_{2axN}$, $F_{2rad,acc*} \le F_{2rad,acc}$, $F_{2rad,eq*} \le F_{2radN}$, $M_{2k,acc*} \le M_{2k,acc}$, $M_{2k,eq*} \le M_{2kN}$, $M_{1k*} \le M_{1k}$
- NO
- YES

5 Reducer Selection Complete (See Load Calculations for each Gearhead Series)

Continuous Duty: Drive is considered continuous duty if the running time ($t^r = t^b + t^d + t^v$) is 60% of the complete cycle time ($t^b + t^d + t^v + t^p$) or longer than 20 minutes.

Cyclic Duty: Drive will cycle on and off.

For cyclic operation, the recommended ratio of external (application) inertia to gearhead inertia can be determined by the following equation:

$$\frac{J_z}{i^2} = 4 \bullet J_D$$

The gearhead selected, using the following equation for inertia ratio, will result in the lowest motor torque demand and the optimum drive selection:

$$\frac{J_z}{i^2} = J_D$$

F_{2A}	Permissible Axial Load
F_{2a}	Axial Load at Output Shaft
F_{2R}	Permissible Radial load
F_{2r}	Radial Load at Output Shaft
f_B	Load Factor
f_L	Running Time Factor
f_T	Factor for Temperature
i	Exact ratio
J_D	Motor + Reducer Inertia @ Motor RPM
J_z	Total Inertia @ Reducer RPM
M_L	Friction Torque (Losses)
M_{2acc}	Acceleration Output Torque
M_{2acc*}	Application Acceleration Torque
M_{2eq*}	Equivalent Torque (Avg RMS Torque)
M_{2k100}	Rated Tilting Torque
$M_{2k,\,eq*}$	Equivalent Tilting Load
M_{2N}	Nominal Output Torque
M_{2NOT}	Peak Output Torque
n_{1db}	Maximum Continuous Input
n_{1zb}	Maximum Cyclic Input
n_{im}	Maximum Continuous Speed
n_{imax}	Maximum Cyclic Speed
T_{2PEAK}	Peak Torque
t_r	Running Time
t_d	Duration Time
t_v	Deceleration Time

P Series: INLINE — Shaft Output

P Features

- 3:1 to 100:1 ratios (higher ratios available. Contact STOBER.)
- Quiet running (as low as 54dB(A))
- Bearing options to suit your application needs.
- Large motor input option to accept bigger diameter motor shafts so you don't use an oversized gearbox
- Error free motor mounting and quick changeover with toleranced pilot on motor plate
- Low no load running torque (see page 19), giving you more torque for your application
- Magnetic oil filtration to remove contaminants to prevent breakdowns
- Build and ship in one day
- Assembled in the USA

STOBER P Series Servo Precision Planetary Gearheads feature HeliCamber® gearing and other components which make them the most accurate and efficient planetary gearheads available. Our gear technology provides minimum wear, low backlash and low noise. Keyed, keyless, bearing options, and more are all available in one day. Every gearbox is made to order. STOBER will custom whatever you need to fit your application. Contact us today to learn more.

All P Series SHIP in 1 DAY!

NO EXPEDITE FEE FOR 24 HOUR SERVICE

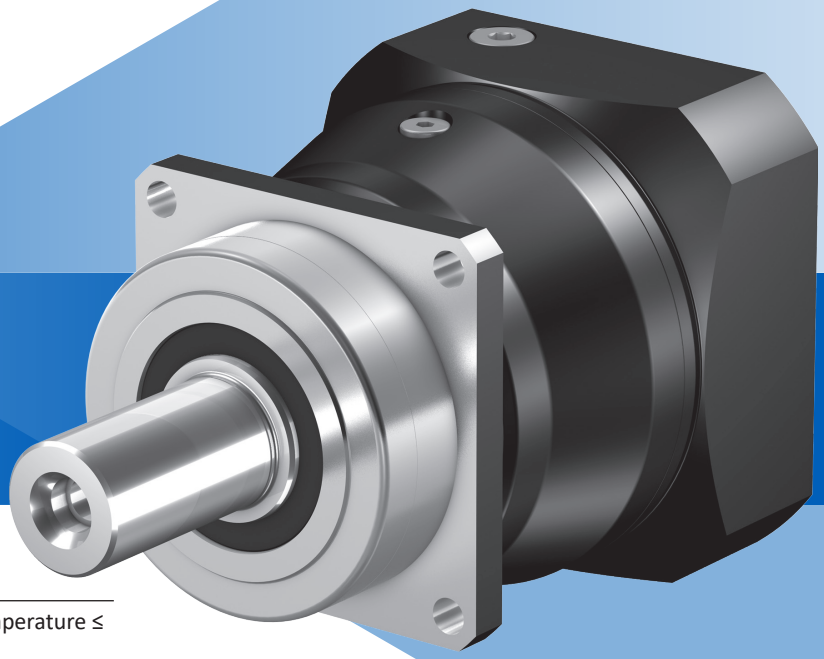

General Specifications

Ambient Temperature	0° C to +40°C (104° F) [Unit temperature ≤ 90° C Max.]
Backlash	1-8 arcmins, see performance overview chart, page 16
Coating	Standard Black (RAL-9005); food duty optional (P3 thru P5 only)
Degree of Protection	IP65
Direction of Rotation	Input and output rotate the SAME direction
Efficiency	1 stage 97%; 2 stage 95%
Input RPM	Up to 8,000 rpm
Installation	Requires grade 10.9 fasteners. See page 288, for more information
Lubrication	Lubricated for life – standard Mobil SHC629; option food grade Mobil SHC CIBUS 150
Mounting Position	Unrestricted
Warranty	5 Year Limited (2 years on normal wear items: bearings, seals, etc.)

Overview



Selection Options *At-a-Glance*

Using the **Selection Data** table later in this section, select the P Series Gearhead with the appropriate performance and design options tailored to your motor choice and exact application requirements. Use the part number guide below as a reference to build a part number for the complete gearhead assembly.

Part Number Examples:

1	2	3	4	5	6	7	8	9	0	!
P	4	3	1	S	G	S	S	0030	ME	L

	Design Option	Part Number Code	Description
1	**Series**	P	Solid shaft inline style planetary
2	**Size**	2 3 4 5 7 8 9	7 sizes of gearhead
3	**Generation**	3	Version of gearhead
4	**# of Stages**	1 2	One stage for ratios of ≤ 10:1 Two stage for ratios >10:1
5	**Housing**	S	Standard mounting style
6	**Output**	P G	Shaft with key Plain shaft (no key)
7	**Bearings** See output bearing options page 18	 S	Ball bearing
		 D	Double row angular contact bearing (except P2)
		 Z	Cylindrical roller bearing (P Series only, except P2)(“Z” cylindrical roller bearing not allowed with reduced backlash option.)
8	**Backlash**	S R	Standard Backlash Reduced Backlash
9	**Ratio**	0030	Ratios range from 3:1 to 100:1 (0030=3:1; 0160=16:1; 1000=100:1, etc.)
0	**Motor Adapter**	ME MF MB	Motor Adapter with EasyAdapt coupling Motor Adapter with FlexiAdapt coupling (Contact factory for this option) ServoStop motor adapter with brake (Contact factory for this option)
!	**Options**	L F	Large Input Food Duty (size P3 thru P5 only)

Options

ME Adapter Option

- MSS1 Seal – special input seal for longer life (for sizes P5-9). Contact factory for this option.

Integrated Safety Brake

- ServoStop – provides dynamic braking during power failures or emergency stops in hazardous situations. Contact factory for this option.

Coating Options

- **Standard:** For dry areas and normal conditions. All units standard coating, unless ordered with Food Duty.
- **Food Duty**: Able to withstand severe wet areas and washdown application (size P3 thru P5 only).

Large Input

- Accommodates a larger diameter motor shaft without going to a larger size gearbox.

ATEX

- ATmosphere EXplosible – rated for explosive environments. Contact factory for this option and allow additional time for delivery.

P Series Performance Overview

P Series performance is dependent on several factors including duty cycle, bearing design, gearhead size and stage configuration, among others. Use the chart below for preliminary evaluation, then use the following performance chart and selection information on the following pages for specific performance sizing and selection.

Series-Size		P2		P3		P4		P5		P7		P8		P9	
# of Stages		1	2	1	2	1	2	1	2	1	2	1	2	1	2
Acceleration Torque M_{2BMAX}	N	25		75		139		355		805		1840		3450	
Output Torque Nom. [1] M_{2N}	N	19		53		102		270		584		1415		2483	
Torsional Stiffness C_2	Nm/arcmin	1.9		5		12		34		67		181		407	
Torsional Backlash [2]	Δϕ	≤6	≤8	≤4	≤5	≤4	≤5	≤3	≤4	≤3	≤4	≤3	≤4	≤3	≤4
	Δϕ Reduced	—	—	≤2	≤3	≤2	≤3	≤1	≤2	≤1	≤2	≤1	≤2	—	—
Input Speed Max. n_{1MAX}	Continuous	6000	6000	5500	6000	4000	5000	3700	4000	3000	3700	2800	3000	2500	2800
	Cyclic	8000	8000	8000	8000	8000	8000	6700	8000	6000	7000	4500	6000	4000	4500
Efficiency (@ nom torque)	%	97	95	97	95	97	95	97	95	97	95	97	95	97	95
Weight	kg	1.5	2.1	2.5	2.6	4.3	5	7.2	8.5	16.9	16.4	34	37.2	50	67.5
	lbs	3.3	4.6	5.5	5.7	9.5	11	15.8	19	37.2	36	74.8	81.8	110	148.5
Noise [3]	dB(A)	≤54	≤54	≤55	≤54	≤56	≤55	≤57	≤56	≤58	≤57	≤59	≤58	≤60	≤59

Performance by Bearing Design Option [4]

S = Ball bearing D = Double row angular contact bearing Z = Cylindrical roller bearing [5]

		P2	P3	P4	P5	P7	P8	P9
Axial Load F_{2ax100}	S	500	1000	1500	2300	2900	4700	6000
	D	—	2500	4000	6000	10,000	15,500	25,000
	Z	—	600	1000	1600	2000	3600	5000
Radial Load Max $F_{2rad100}$	S	1200	2500	4000	6500	8500	13,000	18,000
	D	—	2750	4500	7000	9500	15,000	20,000
	Z	—	3000	5000	8000	10,000	18,000	27,000
Tilting Moment Max M_{2K100}	S	34	79	146	315	544	852	1539
	D	—	94	182	382	665	1095	1930
	Z	—	95	183	388	640	1179	2309

1) *Ratings based on input speed (n_1) of 1500 RPM.*
For torque at higher input speeds (M_{2NX}) solve the formula:
where n_1 = Actual Input Speed.

$$M_{2NX} = \frac{M_{2N}}{\sqrt[3]{\frac{n_1}{1500}}}$$

2) *Tested at 1.5% of nominal torque and recorded on the output side of the gearhead.*

3) *Measurement at one (1) meter distance with input speed (n_1) of 1500 RPM.*

4) *See page 18 for output bearing options. Rating based on output speed (n_2) of 100 RPM. For values at other speeds see page 19.*

5) *"Z" cylindrical roller bearing not allowed with reduced backlash option.*

Overview



P Series Motor Mounting Plate Option (Motor information required with ME or MF Motor Adapter Option)

STOBER Servo Gearheads fit the motor of your choice with the appropriate motor mounting plate assembled between the motor and the gearhead.

NOTE: When ordering a gearhead:

- Specify the motor manufacturer and part number
- Provide the motor drawing with dimensions, or specify the motor mounting dimensions (per the list shown at right)

For a precise dimension on a specific motor, or for general assistance, we recommend you contact STOBER Technical Support.

Maximum 10 working days for custom motor mounting plates.

Customer Required Dimensions for Properly Sized Motor Mounting Plate

d2	Motor Shaft Diameter (If an adapter bushing is required it will be supplied with the motor plate.)
b6	Pilot Diameter
e6	Bolt Circle Diameter
s6	Bolt Diameter
l5	Motor Shaft Length
f6	Pilot Length
a6	Square Flange (Optional – motor plate will typically be made to match this dimension.)

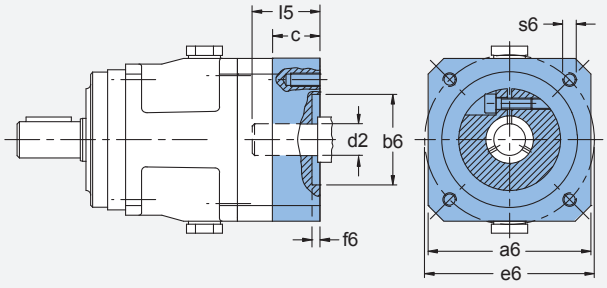

Motor Mounting Plate Dimensions — mm(Gearhead Part Number Specific)	P231 P232 P332	P231...L P232...L P331 P332...L P432	P331...L P431 P432...L P532	P431...L P531 P532...L P732	P531...L P731 P732...L P832	P731...L P831 P832...L P932	P831...L P931 P932...L
Maximum Allowed Motor Shaft Dia. d2	14	19	24	32	38	48	60
Minimum Allowed Motor Plate Thickness c*	15	18	21	24	26	35	43

** Note that c motor plate thickness is determined by the motor shaft length. The minimum motor plate thickness is the value listed.*

P Series Output Shaft Options ("P" or "G" designated in part number, for example: P421S P 0160 MEL)

P Shaft with Key

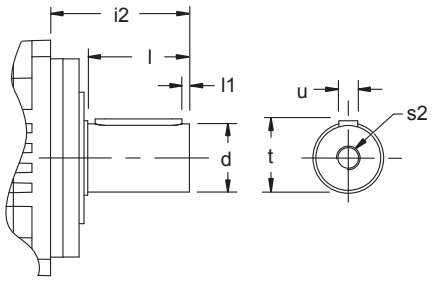

Unit	d k6		l1	l	i2	s2 (1)	t	u (2)
	mm		mm	mm	mm		mm	W x H x L
P2	12	+0.012/+0.001	2	22	36	M4	13.5	A4X4X18
P3	16	+0.012/+0.001	2	28	48	M5	18	A5X5X22
P4	22	+0.015/+0.002	3	36	56	M8	24.5	A6X6X28
P5	32	+0.018/+0.002	3	58	88	M12	35	A10X8X50
P7	40	+0.018/+0.002	4	82	112	M16	43	A12X8X70
P8	55	+0.021/+0.002	6	82	112	M20	59	A16X10X70
P9	75	+0.021/+0.002	7	105	143	M20	79.5	A20X12X90

G Shaft without Key

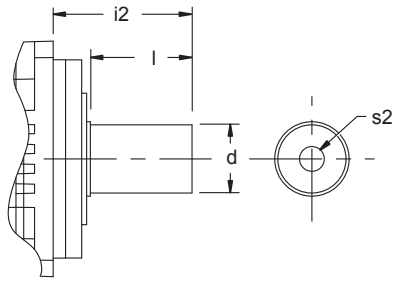

Unit	d k6		l	i2	s2 (1)
	mm		mm	mm	
P2	12	+0.012/+0.001	22	36	M4
P3	16	+0.012/+0.001	28	48	M5
P4	22	+0.015/+0.002	36	56	M8
P5	32	+0.018/+0.002	58	88	M12
P7	40	+0.018/+0.002	82	112	M16
P8	55	+0.021/+0.002	82	112	M20
P9	75	+0.021/+0.002	105	143	M20

(1) *The center hole in shafts with keys (Option "P") are machined to DIN 332 T2 shape DR.*

(2) *Feather keys are toleranced according to standard DIN 6885.*

P Series Output Bearing Options

	S Ball Bearing	D Double Row Angular Contact Bearing	Z Cylindrical Roller Bearing ("Z" cylindrical roller bearing not allowed with reduced backlash option.)
	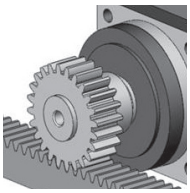	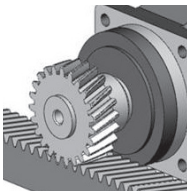	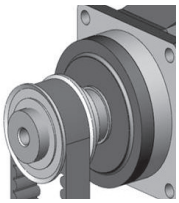
Characteristics:	• Minimal frictional torque • Good radial load capacity • Axial load approx. 35% of radial load	• Low frictional torque • Good radial bearing capacity • Axial load approx. 50% of radial load	• Very good radial load capacity • Axial load approx. 20% of radial load
Applications:	• Spur geared rack/pinion • Couplings • Belt with or without light tension	• Helical geared rack/pinion • Couplings with high axial load • Belt with or without light tension	• Prestressed belt drive • Prestressed spur rack drive • Applications with high radial loads and/or high service requirements

Permissible Output Shaft Load and Tilting Moments*

	z_2 Distance of Shaft Shoulder to Center of Output Bearing	F_{2ax100} Permitted Axial Force	$F_{2rad100}$ Permitted Radial Force ≤100RPM	$F_{2rad,acc}$ Radial Acceleration Force	M_{2K100} Permitted Tilting Torque ≤100RPM	$M_{2k,acc}$ Permitted Acceleration Tilting Torque
Unit	mm	N	N	N	Nm	Nm
S Ball Bearing						
P2	17	500	1200	1300	34	36
P3	17.5	1000	2500	2500	79	79
P4	18.5	1500	4000	4500	146	164
P5	19.5	2300	6500	7000	315	340
P7	23	2900	8000	9000	544	576
P8	24.5	4700	13,000	18,000	852	1179
P9	33	6000	18,000	27,000	1539	2309
D Double Row Angular Contact Bearing						
P3	20	2500	2750	2750	94	94
P4	22.5	4000	4500	5000	182	203
P5	25.5	6000	7000	8000	382	436
P7	29	10,000	9000	10,000	665	700
P8	32	15,500	15,000	18,000	1095	1314
P9	44	25,000	20,000	30,000	1930	2895
Z Cylindrical Roller Bearing						
P3	17.5	600	3000	3000	95	95
P4	18.5	1000	5000	5000	183	183
P5	19.5	1600	8000	8000	388	388
P7	23	2000	10,000	10,000	640	640
P8	24.5	3600	18,000	18,000	1179	1179
P9	33	5000	27,000	35,000	2309	2993

** Refer to illustration and load/life/speed definitions on page 19*

During EMERGENCY OFF operation (maximum stops per gearhead = 1000) the permissible values in the table for F_{2ax100}, $F_{2rad100}$, and M_{2K100} can be multiplied by a factor of 2.

The permissible load values given are valid with the load applied to the center of the output shaft (x_2).



Overview

P No Load Running Torque*

		Input Ratio T_R																		
		One Stage							Two Stage											
Unit		3	4	5	7	8	10	12	16	20	25	28	32	35	40	50	56	70	80	100
P2	Nm	–	0.16	0.13	0.13	0.13	0.10	–	0.13	0.13	0.08	0.08	0.08	0.08	0.08	0.08	0.08	0.08	0.08	0.08
P3	Nm	0.26	0.21	.016	0.16	0.16	.016	0.13	0.13	0.13	0.08	0.08	0.13	0.08	0.08	0.08	0.08	0.08	0.08	0.08
P4	Nm	0.33	0.23	0.23	0.18	0.18	0.18	0.14	0.14	0.14	0.11	0.11	0.14	0.11	0.11	0.11	0.11	0.11	0.11	0.11
P5	Nm	0.60	0.45	0.40	0.30	0.20	0.20	0.23	0.23	0.23	0.18	0.18	0.23	0.18	0.18	0.18	0.18	0.18	0.18	0.18
P7	Nm	0.83	0.53	0.43	0.33	0.23	0.23	0.30	0.30	0.30	0.20	0.20	0.30	0.20	0.20	0.20	0.20	0.20	0.20	0.20
P8	Nm	1.05	0.75	0.65	0.45	0.35	0.35	0.48	0.43	0.43	0.33	0.33	0.43	0.23	0.23	0.23	0.23	0.23	0.23	0.23
P9	Nm	–	0.92	0.72	0.52	–	0.42	–	0.55	0.55	0.45	0.45	–	0.35	0.35	0.35	–	0.35	–	0.35

** Torque is measured with the input at 2000 RPM and an ambient temperature of 20° C.*

Permissible Motor Tilting Torque

The permissible tilting torque of the motor attached to the gear unit is a result of the static and dynamic load "F" from the motor weight, mass acceleration, and vibration multiplied by the distance from the center of gravity "l_S" of the motor.

M_{1K}	P231 P232 P332	P331 P432	P431 P532	P531 P732	P731 P832	P831 P932	P931
Nm	10	20	40	80	200	400	800

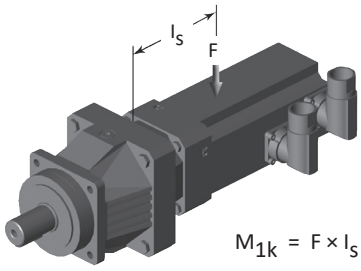

$$M_{1k} = F \times l_S \leq M_{1K}$$

P Series Load/Life/Speed Calculations

The permissible load and tilting moment values are based on an output speed of 100 RPM. For higher speeds the following applies, where n_2 is the desired speed:

$$F_{2AX} = \frac{F_{2ax100}}{\sqrt[3]{\frac{n_2}{100}}} \qquad F_{2RX} = \frac{F_{2rad100}}{\sqrt[3]{\frac{n_2}{100}}} \qquad M_{2KX} = \frac{M_{2K100}}{\sqrt[3]{\frac{n_2}{100}}}$$

The application output tilting moment should be determined by the following formula:

$$M_{2k,acc*} = \frac{2 \bullet F_{2ax100} \bullet y_2 + F_{2rad,acc} \bullet (x_2 + Z_2)}{1000} \leq M_{2k,acc}$$

$$M_{2k,eq*} = \sqrt[3]{\frac{n_{2b1} \bullet t_{b1} \bullet M_{2kb1}^{\ 3} + \ldots + n_{2bn} \bullet t_{bn} \bullet M_{2kbn}^{\ 3}}{n_{2b1} \bullet t_{b1} + \ldots + n_{2bn} \bullet t_{bn}}} \leq M_{2kN}$$

$$F_{2rad,eq*} = \sqrt[3]{\frac{n_{2b1} \bullet t_{b1} \bullet F_{2rb1}^{\ 3} + \ldots + n_{2bn} \bullet t_{bn} \bullet F_{2rbn}^{\ 3}}{n_{2b1} \bullet t_{b1} + \ldots + n_{2bn} \bullet t_{bn}}} \leq F_{2radN}$$

Where:

z_2	Distance of Shaft Shoulder to Center of Output Bearing
n_2	Actual Average Output Speed
x_2	Distance of the Shaft Shoulder to the Force Application Point
y_2	Distance of the Shaft Axis to the Axial Force Application Point
F_{2ax}*	Actual Axial Force at Gear Unit Output
F_{2ax100}	Permitted Axial Force
$F_{2rad100}$	Permitted Radial Force ≤100RPM
$F_{2rad,acc}$	Radial Acceleration Force
$F_{2rad,acc}$*	Radial Acceleration Force at Gear Unit Output
M_{2K100}	Permitted Tilting Torque ≤100RPM
$M_{2K,acc}$	Permitted Acceleration Tilting Torque
$M_{2k,acc}$*	Permitted Acceleration Tilting Torque at Gear Unit Output
C_{2K}	Tilting Stiffness

All formulas shown are based on METRIC values

Upper case letters are permissible values. Lower case letters are for existing values.

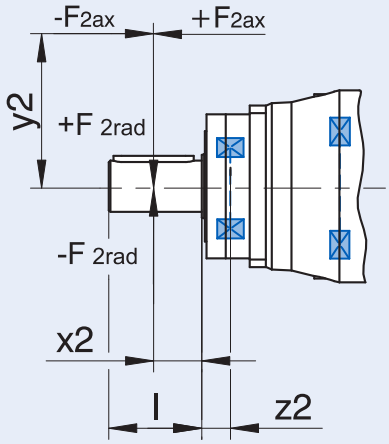

The hours of life (L_h) of the unit can be determined by the following formula:

bearing life for duty cycle ≤ 40%

L_h > 10,000 hours if M_{2K100}/M_{2A} < 1.25 and > 1
L_h > 20,000 hours if M_{2K100}/M_{2A} > 1.25 and > 1.5
L_h > 30,000 hours if M_{2K100}/M_{2A} < 1.5

bearing life for duty cycle ≥ 40%

$$L_{hA} = L_h \left(\frac{40\%}{\text{Duty Cycle}} \right)$$

Exact Ratio (i)	Output Torque: Nom. [1] M_{2N} Nm	Output Torque: Accel. M_{2acc} Nm	Output Torque: Accel. Torque for Reduced Backlash M_{2accHT} Nm	Output Torque: Peak [2] M_{2NOT} Nm	Backlash $\Delta\phi_2$ arcmin	Red. Backlash $\Delta\phi_{2red}$ arcmin	Part Number* (Gearhead + Input)	Max. Input Speed RPM (n1): Cont.	Max. Input Speed RPM (n1): Cyclic	Motor Shaft [3] Max Ø d_{MW} mm	Input Inertia J_1 kgcm²	Tors. Stiffness C_2 Nm/arcmin	Oper. Noise L_{pA} dB(A)
P2													
4.000	16	25	–	51	6	–	P231_0040 ME	6000	8000	≤14	0.14	1.8	59
							P231_0040 MEL			≤19	0.43	1.9	
5.000	16	25	–	51	6	–	P231_0050 ME	6000	8000	≤14	0.12	1.9	57
							P231_0050 MEL			≤19	0.41		
7.000	16	23	–	46	6	–	P231_0070 ME	6000	8000	≤14	0.11	1.8	56
							P231_0070 MEL			≤19	0.40		
8.000	14	21	–	41	6	–	P231_0080 ME	6000	8000	≤14	0.10	1.7	55
							P231_0080 MEL			≤19	0.40		
10.00	12	21	–	41	6	–	P231_0100 ME	6000	8000	≤14	0.10	1.6	54
							P231_0100 MEL			≤19	0.39		
16.00	16	24	–	48	8	–	P232_0160 ME	6000	8000	≤14	0.13	1.8	59
							P232_0160 MEL			≤19	0.42		
20.00	16	25	–	51	8	–	P232_0200 ME	6000	8000	≤14	0.14	1.8	59
							P232_0200 MEL			≤19	0.43		
25.00	16	25	–	51	8	–	P232_0250 ME	6000	8000	≤14	0.12	1.8	57
							P232_0250 MEL			≤19	0.41		
28.00	16	24	–	48	8	–	P232_0280 ME	6000	8000	≤14	0.11	1.8	56
							P232_0280 MEL			≤19	0.40		
32.00	16	21	–	41	8	–	P232_0320 ME	6000	8000	≤14	0.13	1.7	59
							P232_0320 MEL			≤19	0.42		
35.00	18	25	–	51	8	–	P232_0350 ME	6000	8000	≤14	0.11	1.8	56
							P232_0350 MEL			≤19	0.40		
40.00	16	24	–	48	8	–	P232_0400 ME	6000	8000	≤14	0.10	1.8	54
							P232_0400 MEL			≤19	0.39		
50.00	19	25	–	51	8	–	P232_0500 ME	6000	8000	≤14	0.10	1.8	54
							P232_0500 MEL			≤19	0.39		
56.00	16	21	–	41	8	–	P232_0560 ME	6000	8000	≤14	0.11	1.7	56
							P232_0560 MEL			≤19	0.40		
70.00	18	23	–	46	8	–	P232_0700 ME	6000	8000	≤14	0.10	1.8	54
							P232_0700 MEL			≤19	0.39		
80.00	16	21	–	41	8	–	P232_0800 ME	6000	8000	≤14	0.10	1.7	54
							P232_0800 MEL			≤19	0.39		
100.0	16	21	–	41	8	–	P232_1000 ME	6000	8000	≤14	0.10	1.6	54
							P232_1000 MEL			≤19	0.39		

[1] *Based on input speed of 1500RPM. See page 16 for details on torque calculations.*
[2] *Maximum momentary torque for emergency stops or heavy shock load. (Admissible stops per life of gearhead = 1,000 stops maximum.)*
[3] *For additional motor shaft sizes or smaller inertia values, please visit configurator.stober.com*
* *ME = Motor Adapter L = Large Input*

Selection Data



Exact Ratio (i)	Output Torque: Nom. M_{2N} [1] Nm	Output Torque: Accel. M_{2acc} Nm	Output Torque: Accel. Torque for Reduced Backlash M_{2accHT} Nm	Output Torque: Peak M_{2NOT} [2] Nm	Back-lash $\Delta\phi_2$ arcmin	Red. Back-lash $\Delta\phi_{2red}$ arcmin	Part Number* (Gearhead + Input)	Max. Input Speed RPM (n1): Cont.	Max. Input Speed RPM (n1): Cyclic	Motor Shaft [3] Max Ø d_{MW} mm	Input Inertia J_1 kgcm²	Tors. Stiffness C_2 Nm/arcmin	Oper. Noise L_{pA} dB(A)
P3													
3.000	30	50	50	100	4	2	P331_0030 ME	3500	7000	≤19	0.67	5.0	62
							P331_0030 MEL			≤24	1.1	5.1	
4.000	45	65	65	130	4	2	P331_0040 ME	4000	8000	≤19	0.51	5.3	60
							P331_0040 MEL			≤24	0.94		
5.000	45	75	80	150	4	2	P331_0050 ME	4500	8000	≤19	0.46	5.4	58
							P331_0050 MEL			≤24	0.89		
7.000	45	69	75	138	4	2	P331_0070 ME	5000	8000	≤19	0.42	5.0	57
							P331_0070 MEL			≤24	0.85		
8.000	40	63	65	126	4	2	P331_0080 ME	5000	8000	≤19	0.41	4.6	56
							P331_0080 MEL			≤24	0.84		
10.00	36	60	60	120	4	2	P331_0100 ME	5500	8000	≤19	0.40	4.4	55
							P331_0100 MEL			≤24	0.83		
12.00	30	50	50	100	5	3	P332_0120 ME	5500	8000	≤14	0.14	4.6	59
							P332_0120 MEL			≤19	0.43		
16.00	45	65	65	130	5	3	P332_0160 ME	5500	8000	≤14	0.13	5.1	59
							P332_0160 MEL			≤19	0.42		
20.00	50	75	75	150	5	3	P332_0200 ME	5500	8000	≤14	0.13	5.2	59
							P332_0200 MEL			≤19	0.42		
25.00	50	75	75	150	5	3	P332_0250 ME	6000	8000	≤14	0.13	5.2	57
							P332_0250 MEL			≤19	0.41		
28.00	45	65	70	130	5	3	P332_0280 ME	6000	8000	≤14	0.11	5.1	56
							P332_0280 MEL			≤19	0.42		
32.00	48	63	65	126	5	3	P332_0320 ME	5500	8000	≤14	0.13	4.6	59
							P332_0320 MEL			≤19	0.43		
35.00	50	75	75	150	5	3	P332_0350 ME	6000	8000	≤14	0.10	5.2	56
							P332_0350 MEL			≤19	0.39		
40.00	45	65	65	130	5	3	P332_0400 ME	6000	8000	≤14	0.10	4.8	54
							P332_0400 MEL			≤19	0.39		
50.00	50	75	75	150	5	3	P332_0500 ME	6000	8000	≤14	0.10	5.0	54
							P332_0500 MEL			≤19	0.39		
56.00	48	63	65	126	5	3	P332_0560 ME	6000	8000	≤14	0.10	4.6	56
							P332_0560 MEL			≤19	0.39		
70.00	53	69	69	138	5	3	P332_0700 ME	6000	8000	≤14	0.10	4.9	54
							P332_0700 MEL			≤19	0.39		
80.00	48	63	65	126	5	3	P332_0800 ME	6000	8000	≤14	0.10	4.5	54
							P332_0800 MEL			≤19	0.39		
100.0	46	60	60	120	5	3	P332_1000 ME	6000	8000	≤14	0.10	4.3	54
							P332_1000 MEL			≤19	0.39		

[1] *Based on input speed of 1500RPM. See page 16 for details on torque calculations.*
[2] *Maximum momentary torque for emergency stops or heavy shock load. (Admissible stops per life of gearhead = 1,000 stops maximum.)*
[3] *For additional motor shaft sizes or smaller inertia values, please visit configurator.stober.com*
* *ME = Motor Adapter L = Large Input*

Exact Ratio (i)	Output Torque: Nom. [1] M_{2N} Nm	Output Torque: Accel. M_{2acc} Nm	Output Torque: Accel. Torque for Reduced Backlash M_{2accHT} Nm	Output Torque: Peak [2] M_{2NOT} Nm	Backlash $\Delta\phi_2$ arcmin	Red. Backlash $\Delta\phi_{2red}$ arcmin	Part Number* (Gearhead + Input)	Max. Input Speed RPM (n1): Cont.	Max. Input Speed RPM (n1): Cyclic	Motor Shaft [3] Max Ø d_{MW} mm	Input Inertia J_1 kgcm²	Tors. Stiffness C_2 Nm/arcmin	Oper. Noise L_{pA} dB(A)
P4													
3.000	50	100	100	200	4	2	P431_0030 ME	3000	6000	≤24	1.6	12	63
							P431_0030 MEL			≤32	3.2		
4.000	90	120	130	240	4	2	P431_0040 ME	3300	6500	≤24	1.2	13	61
							P431_0040 MEL			≤32	2.8		
5.000	90	139	145	277	4	2	P431_0050 ME	3700	7000	≤24	1.0	13	59
							P431_0050 MEL			≤32	2.7		
7.000	90	135	143	271	4	2	P431_0070 ME	4000	8000	≤24	0.92	11	58
							P431_0070 MEL			≤32	2.5		
8.000	80	120	125	239	4	2	P431_0080 ME	4000	8000	≤24	0.90	9.7	57
							P431_0080 MEL			≤32	2.5		
10.00	75	115	115	230	4	2	P431_0100 ME	4000	8000	≤24	0.88	9.1	56
							P431_0100 MEL			≤32	2.5		
12.00	60	100	100	200	5	3	P432_0120 ME	3500	7000	≤19	0.52	11	60
							P432_0120 MEL			≤24	0.95		
16.00	89	130	130	260	5	3	P432_0160 ME	4000	8000	≤19	0.49	12	60
							P432_0160 MEL			≤24	0.92		
20.00	95	134	139	268	5	3	P432_0200 ME	4000	8000	≤19	0.48	12	60
							P432_0200 MEL			≤24	0.91		
25.00	100	134	139	268	5	3	P432_0250 ME	4500	8000	≤19	0.45	12	58
							P432_0250 MEL			≤24	0.87		
28.00	95	130	130	260	5	3	P432_0280 ME	4500	8000	≤19	0.42	12	57
							P432_0280 MEL			≤24	0.85		
32.00	90	126	131	253	5	3	P432_0320 ME	4000	8000	≤19	0.47	9.6	60
							P432_0320 MEL			≤24	0.90		
35.00	102	133	138	266	5	3	P432_0350 ME	4500	8000	≤19	0.42	12	57
							P432_0350 MEL			≤24	0.84		
40.00	87	130	130	260	5	3	P432_0400 ME	5000	8000	≤19	0.40	12	55
							P432_0400 MEL			≤24	0.83		
50.00	102	132	138	264	5	3	P432_0500 ME	5000	8000	≤19	0.40	12	55
							P432_0500 MEL			≤24	0.83		
56.00	88	115	115	230	5	3	P432_0560 ME	5000	8000	≤19	0.41	9.6	57
							P432_0560 MEL			≤24	0.84		
70.00	97	127	127	253	5	3	P432_0700 ME	5000	8000	≤19	0.40	11	55
							P432_0700 MEL			≤24	0.83		
80.00	88	115	115	230	5	3	P432_0800 ME	5000	8000	≤19	0.40	9.6	55
							P432_0800 MEL			≤24	0.83		
100.0	85	110	110	220	5	3	P432_1000 ME	5000	8000	≤19	0.40	9.0	55
							P432_1000 MEL			≤24	0.83		

[1] *Based on input speed of 1500RPM. See page 16 for details on torque calculations.*
[2] *Maximum momentary torque for emergency stops or heavy shock load. (Admissible stops per life of gearhead = 1,000 stops maximum.)*
[3] *For additional motor shaft sizes or smaller inertia values, please visit configurator.stober.com*
* *ME = Motor Adapter L = Large Input*

Selection Data



Exact Ratio (i)	Output Torque: Nom. [1] M_{2N} Nm	Output Torque: Accel. M_{2acc} Nm	Output Torque: Accel. Torque for Reduced Backlash M_{2accHT} Nm	Output Torque: Peak [2] M_{2NOT} Nm	Back-lash $\Delta\phi_2$ arcmin	Red. Back-lash $\Delta\phi_{2red}$ arcmin	Part Number* (Gearhead + Input)	Max. Input Speed RPM (n1): Cont.	Max. Input Speed RPM (n1): Cyclic	Motor Shaft [3] Max Ø d_{MW} mm	Input Inertia J_1 kgcm²	Tors. Stiffness C_2 Nm/arcmin	Oper. Noise L_{pA} dB(A)
P5													
3.000	120	200	200	400	3	1	P531_0030 ME	2500	5000	≤32	5.3	33	64
							P531_0030 MEL			≤38	8.8		
4.000	210	300	320	600	3	1	P531_0040 ME	3000	6000	≤32	3.7	34	62
							P531_0040 MEL			≤38	7.2		
5.000	220	350	385	700	3	1	P531_0050 ME	3500	7000	≤32	3.2	34	60
							P531_0050 MEL			≤38	6.8		
7.000	210	333	380	667	3	1	P531_0070 ME	3700	7000	≤32	2.9	31	59
							P531_0070 MEL			≤38	6.4		
8.000	200	296	300	592	3	1	P531_0080 ME	3700	7000	≤32	2.8	25	58
							P531_0080 MEL			≤38	6.3		
10.00	180	288	288	575	3	1	P531_0100 ME	3700	7000	≤32	2.7	26	57
							P531_0100 MEL			≤38	6.2		
12.00	120	200	200	400	4	2	P532_0120 ME	3000	6000	≤24	1.2	31	61
							P532_0120 MEL			≤32	2.8		
16.00	220	300	300	600	4	2	P532_0160 ME	3500	7000	≤24	1.1	33	61
							P532_0160 MEL			≤32	2.8		
20.00	250	355	364	710	4	2	P532_0200 ME	3500	7000	≤24	1.1	33	61
							P532_0200 MEL			≤32	2.7		
25.00	260	355	357	710	4	2	P532_0250 ME	3700	7000	≤24	0.99	33	59
							P532_0250 MEL			≤32	2.6		
28.00	231	300	300	600	4	2	P532_0280 ME	4000	8000	≤24	0.92	32	58
							P532_0280 MEL			≤32	2.5		
32.00	240	312	363	624	4	2	P532_0320 ME	3500	7000	≤24	1.1	25	61
							P532_0320 MEL			≤32	2.7		
35.00	270	352	352	704	4	2	P532_0350 ME	4000	8000	≤24	0.91	33	58
							P532_0350 MEL			≤32	2.5		
40.00	214	300	300	600	4	2	P532_0400 ME	4000	8000	≤24	0.88	31	56
							P532_0400 MEL			≤32	2.5		
50.00	269	352	352	704	4	2	P532_0500 ME	4000	8000	≤24	0..87	32	56
							P532_0500 MEL			≤32	2.5		
56.00	221	288	288	575	4	2	P532_0560 ME	4000	8000	≤24	0.90	25	58
							P532_0560 MEL			≤32	2.5		
70.00	263	345	357	690	4	2	P532_0700 ME	4200	8000	≤24	0.87	30	56
							P532_0700 MEL			≤32	2.5		
80.00	221	288	288	575	4	2	P532_0800 ME	4200	8000	≤24	0.87	25	56
							P532_0800 MEL			≤32	2.5		
100.0	221	288	288	575	4	2	P532_1000 ME	4200	8000	≤24	0.87	26	56
							P532_1000 MEL			≤32	2.5		

[1] *Based on input speed of 1500RPM. See page 16 for details on torque calculations.*
[2] *Maximum momentary torque for emergency stops or heavy shock load. (Admissible stops per life of gearhead = 1,000 stops maximum.)*
[3] *For additional motor shaft sizes or smaller inertia values, please visit configurator.stober.com*
* *ME = Motor Adapter L = Large Input*

Exact Ratio (i)	Output Torque: Nom. [1] M_{2N} Nm	Output Torque: Accel. M_{2acc} Nm	Output Torque: Accel. Torque for Reduced Backlash M_{2accHT} Nm	Output Torque: Peak [2] M_{2NOT} Nm	Back-lash $\Delta\phi_2$ arcmin	Red. Back-lash $\Delta\phi_{2red}$ arcmin	Part Number* (Gearhead + Input)	Max. Input Speed RPM (n1): Cont.	Max. Input Speed RPM (n1): Cyclic	Motor Shaft [3] Max Ø d_{MW} mm	Input Inertia J_1 kgcm²	Tors. Stiffness C_2 Nm/arcmin	Oper. Noise L_{pA} dB(A)
P7													
3.000	300	500	500	1000	3	1	P731_0030 ME	2200	4000	≤38	15	62	65
							P731_0030 MEL			≤48	26	64	
4.000	440	700	725	1335	3	1	P731_0040 ME	2500	5000	≤38	10	65	63
				1400			P731_0040 MEL			≤48	21	67	
5.000	440	805	840	1610	3	1	P731_0050 ME	2700	5500	≤38	8.8	65	61
							P731_0050 MEL			≤48	19		
7.000	440	805	840	1610	3	1	P731_0070 ME	3000	6000	≤38	7.6	60	60
							P731_0070 MEL			≤48	18	61	
8.000	400	668	700	1336	3	1	P731_0080 ME	3000	6000	≤38	7.3	57	59
							P731_0080 MEL			≤48	17		
10.00	350	575	575	1150	3	1	P731_0100 ME	3000	6000	≤38	7.0	54	58
							P731_0100 MEL			≤48	17		
12.00	295	500	500	1000	4	2	P732_0120 ME	2500	5000	≤32	3.9	61	62
							P732_0120 MEL			≤38	7.4		
16.00	450	700	700	1400	4	2	P732_0160 ME	3000	6000	≤32	3.6	65	62
							P732_0160 MEL			≤38	7.1		
20.00	460	805	805	1610	4	2	P732_0200 ME	3000	6000	≤32	3.6	64	62
							P732_0200 MEL			≤38	7.1		
25.00	500	805	805	1610	4	2	P732_0250 ME	3500	7000	≤32	3.1	64	60
							P732_0250 MEL			≤38	6.6		
28.00	538	700	700	1400	4	2	P732_0280 ME	3700	7000	≤32	2.8	64	59
							P732_0280 MEL			≤38	6.3		
32.00	470	730	730	1460	4	2	P732_0320 ME	3000	6000	≤32	3.4	57	62
							P732_0320 MEL			≤38	6.9		
35.00	540	770	805	1540	4	2	P732_0350 ME	3700	7000	≤32	2.8	64	59
							P732_0350 MEL			≤38	6.4		
40.00	454	700	700	1400	4	2	P732_0400 ME	3700	7000	≤32	2.7	63	57
							P732_0400 MEL			≤38	6.2		
50.00	565	770	805	1540	4	2	P732_0500 ME	3700	7000	≤32	2.7	63	57
							P732_0500 MEL			≤38	6.2		
56.00	500	650	650	1300	4	2	P732_0560 ME	3700	7000	≤32	2.8	57	59
							P732_0560 MEL			≤38	6.4		
70.00	584	762	799	1525	4	2	P732_0700 ME	3700	7000	≤32	2.7	60	57
							P732_0700 MEL			≤38	6.2		
80.00	477	620	620	1240	4	2	P732_0800 ME	3700	7000	≤32	2.7	57	57
							P732_0800 MEL			≤38	6.2		
100.0	423	550	550	1100	4	2	P732_1000 ME	3700	7000	≤32	2.7	54	57
							P732_1000 MEL			≤38	6.2		

[1] *Based on input speed of 1500RPM. See page 16 for details on torque calculations.*
[2] *Maximum momentary torque for emergency stops or heavy shock load. (Admissible stops per life of gearhead = 1,000 stops maximum.)*
[3] *For additional motor shaft sizes or smaller inertia values, please visit configurator.stober.com*
* *ME = Motor Adapter L = Large Input*

Selection Data



Exact Ratio (i)	Output Torque: Nom. M_{2N} Nm	Output Torque: Accel. M_{2acc} Nm	Output Torque: Accel. Torque for Reduced Backlash M_{2accHT} Nm	Output Torque: Peak M_{2NOT} Nm	Back-lash $\Delta\phi_2$ arcmin	Red. Back-lash $\Delta\phi_{2red}$ arcmin	Part Number* (Gearhead + Input)	Max. Input Speed RPM (n1): Cont.	Max. Input Speed RPM (n1): Cyclic	Motor Shaft [3] Max Ø d_{MW} mm	Input Inertia J_1 kgcm²	Tors. Stiffness C_2 Nm/arcmin	Oper. Noise L_{pA} dB(A)
P8													
3.000	800	1200	1200	1825	3	1	P831_0030 ME	1800	3000	≤48	59	170	66
				2400			P831_0030 MEL			≤60	87	178	
4.000	880	1760	1760	2433	3	1	P831_0040 ME	2000	3500	≤48	36	176	64
				3230			P831_0040 MEL			≤60	64	180	
5.000	1100	1840	2000	3041	3	1	P831_0050 ME	2500	4000	≤48	28	178	62
				3230			P831_0050 MEL			≤60	56	181	
7.000	1000	1760	1840	3230	3	1	P831_0070 ME	2800	4500	≤48	23	167	61
							P831_0070 MEL			≤60	51	168	
8.000	850	1500	1500	3000	3	1	P831_0080 ME	2800	4500	≤48	21	160	60
							P831_0080 MEL			≤60	50	161	
10.00	850	1380	1380	2760	3	1	P831_0100 ME	2800	4500	≤48	20	149	59
							P831_0100 MEL			≤60	48		
12.00	800	1200	1200	2400	4	2	P832_0120 ME	2200	4500	≤38	12	166	63
							P832_0120 MEL			≤48	22	167	
16.00	1100	1600	1600	3200	4	2	P832_0160 ME	2700	5000	≤38	11	173	63
							P832_0160 MEL			≤48	21	174	
20.00	1250	1840	2000	3230	4	2	P832_0200 ME	2700	5000	≤38	10	176	63
							P832_0200 MEL			≤48	20	177	
25.00	1300	1840	2000	3230	4	2	P832_0250 ME	2900	5000	≤38	8.8	176	61
							P832_0250 MEL			≤48	19		
28.00	1100	1600	1600	3200	4	2	P832_0280 ME	3000	5000	≤38	7.8	171	60
							P832_0280 MEL			≤48	18	172	
32.00	1173	1525	1595	3049	4	2	P832_0320 ME	2700	5000	≤38	9.9	159	63
							P832_0320 MEL			≤48	20		
35.00	1415	1840	2000	3230	4	2	P832_0350 ME	3000	6000	≤38	7.6	175	60
							P832_0350 MEL			≤48	18		
40.00	1097	1600	1600	3200	4	2	P832_0400 ME	3000	6000	≤38	7.1	168	58
							P832_0400 MEL			≤48	17		
50.00	1415	1840	2000	3230	4	2	P832_0500 ME	3000	6000	≤38	7.0	173	58
							P832_0500 MEL			≤48	17		
56.00	1062	1380	1380	2760	4	2	P832_0560 ME	3000	6000	≤38	7.5	159	60
							P832_0560 MEL			≤48	18		
70.00	1238	1610	1610	3220	4	2	P832_0700 ME	3000	6000	≤38	7.0	164	58
							P832_0700 MEL			≤48	17		
80.00	1062	1380	1380	2760	4	2	P832_0800 ME	3000	6000	≤38	6.9	159	58
							P832_0800 MEL			≤48	17		
100.0	1015	1320	1320	2640	4	2	P832_1000 ME	3000	6000	≤38	6.9	148	58
							P832_1000 MEL			≤48	17		

[1] *Based on input speed of 1500RPM. See page 16 for details on torque calculations.*
[2] *Maximum momentary torque for emergency stops or heavy shock load. (Admissible stops per life of gearhead = 1,000 stops maximum.)*
[3] *For additional motor shaft sizes or smaller inertia values, please visit configurator.stober.com*
* *ME = Motor Adapter L = Large Input*

Exact Ratio (i)	Output Torque: Nom. [1] M_{2N} Nm	Output Torque: Accel. M_{2acc} Nm	Output Torque: Accel. Torque for Reduced Backlash M_{2accHT} Nm	Output Torque: Peak [2] M_{2NOT} Nm	Back-lash $\Delta\phi_2$ arcmin	Red. Back-lash $\Delta\phi_{2red}$ arcmin	Part Number* (Gearhead + Input)	Max. Input Speed RPM (n1): Cont.	Max. Input Speed RPM (n1): Cyclic	Motor Shaft [3] Max Ø d_{MW} mm	Input Inertia J_1 kgcm²	Tors. Stiffness C_2 Nm/arcmin	Oper. Noise L_{pA} dB(A)
P9													
4.000	2000	3000	–	5599	3	–	P931_0040 ME	1800	3000	≤60	100	407	70
5.000	2000	3450	–	6900	3	–	P931_0050 ME	2000	3500	≤60	82	407	68
7.000	2100	3105	–	6210	3	–	P931_0070 ME	2300	4000	≤60	69	375	66
10.00	1769	2300	–	4600	3	–	P931_0100 ME	2500	4000	≤60	62	323	64
16.00	2000	3000	–	6000	4	–	P932_0160 ME	2000	3500	≤48	37	403	64
							P932_0160 MEL			≤60	65	404	
20.00	2483	3450	–	6900	4	–	P932_0200 ME	2000	3500	≤48	35	405	64
							P932_0200 MEL			≤60	64	406	
25.00	2441	3300	–	6600	4	–	P932_0250 ME	2500	4000	≤48	28	405	62
							P932_0250 MEL			≤60	56	406	
28.00	2280	3000	–	6000	4	–	P932_0280 ME	2800	4500	≤48	23	401	61
							P932_0280 MEL			≤60	51		
35.00	2376	3300	–	6600	4	–	P932_0350 ME	2800	4500	≤48	23	403	61
							P932_0350 MEL			≤60	51	404	
40.00	2000	3000	–	6000	4	–	P932_0400 ME	2800	4500	≤48	20	394	59
							P932_0400 MEL			≤60	48		
50.00	2295	3200	–	6400	4	–	P932_0500 ME	2800	4500	≤48	20	399	59
							P932_0500 MEL			≤60	48		
70.00	2387	3156	–	6312	4	–	P932_0700 ME	2800	4500	≤48	20	372	59
							P932_0700 MEL			≤60	48		
100.0	1692	2200	–	4400	4	–	P932_1000 ME	2800	4500	≤48	20	321	59
							P932_1000 MEL			≤60	48		

[1] *Based on input speed of 1500RPM. See page 16 for details on torque calculations.*
[2] *Maximum momentary torque for emergency stops or heavy shock load. (Admissible stops per life of gearhead = 1,000 stops maximum.)*
[3] *For additional motor shaft sizes or smaller inertia values, please visit configurator.stober.com*
* *ME = Motor Adapter L = Large Input*

Dimensional Data



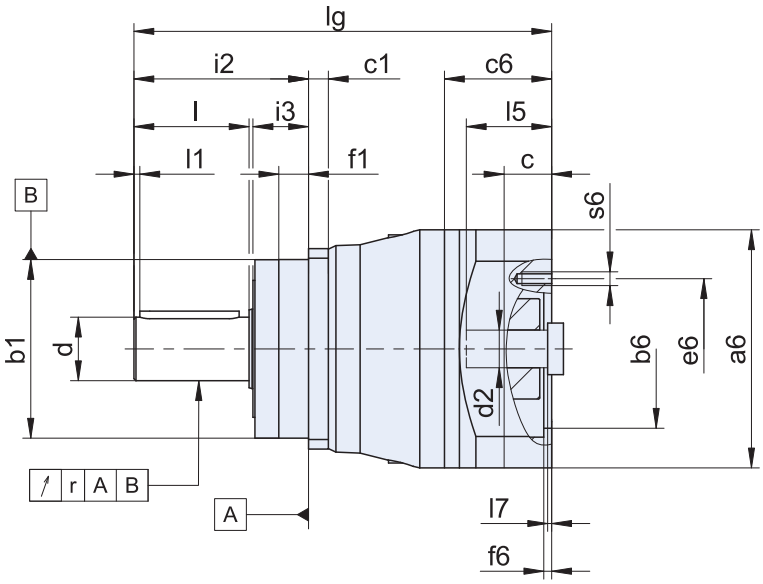

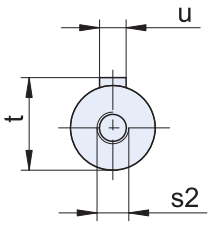

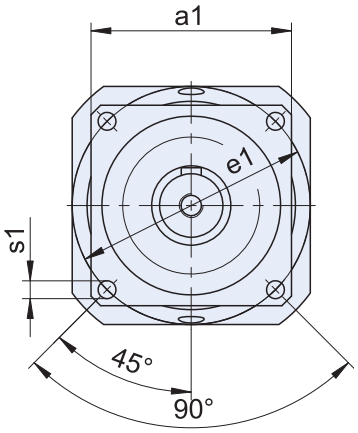

** See Motor Mounting Plate Option, page 17 for details.*
*** See Output Shaft Options, page 17 for details.*

Table 1 Dimensions (mm)

Unit	□a1	Øb1	c1	Ød	Øe1	f1	i2	i3	l	l1	r	Øs1	s2	t	u
P231	55	50_{h6}	6	12_{k6}	63	7.0	36	12	22	2	–	5.5	M4	13.5	A4×4×18
P232	55	50_{h6}	6	12_{k6}	63	7.0	36	12	22	2	–	5.5	M4	13.5	A4×4×18
P331	72	60_{h6}	7	16_{k6}	75	7.5	48	18	28	2	0.025	5.5	M5	18.0	A5×5×22
P332	72	60_{h6}	7	16_{k6}	75	7.5	48	18	28	2	0.025	5.5	M5	18.0	A5×5×22
P431	76	70_{h6}	9	22_{k6}	85	7.5	56	18	36	3	0.025	6.6	M8	24.5	A6×6×28
P432	76	70_{h6}	9	22_{k6}	85	7.5	56	18	36	3	0.025	6.6	M8	24.5	A6×6×28
P531	101	90_{h6}	10	32_{k6}	120	15.0	88	28	58	3	0.030	9.0	M12	35.0	A10×8×50
P532	101	90_{h6}	10	32_{k6}	120	15.0	88	28	58	3	0.030	9.0	M12	35.0	A10×8×50
P731	144	130_{h6}	15	40_{k6}	165	3.5	112	27	82	4	0.035	11.0	M16	43.0	A12×8×70
P732	144	130_{h6}	15	40_{k6}	165	3.5	112	27	82	4	0.035	11.0	M16	43.0	A12×8×70
P831	190	160_{h6}	15	55_{k6}	215	10.0	112	27	82	6	0.035	13.5	M20	59.0	A16×10×70
P832	190	160_{h6}	15	55_{k6}	215	10.0	112	27	82	6	0.035	13.5	M20	59.0	A16×10×70
P931	212	180_{h6}	17	75_{k6}	250	10.0	143	34	105	7	0.040	17.5	M20	79.5	A20×12×90
P932	212	180_{h6}	17	75_{k6}	250	10.0	143	34	105	7	0.040	17.5	M20	79.5	A20×12×90

Table 2 Dimensions (mm)

Unit	Øb6	Øe6	Ød2max	l5	□a6	c	c6	f6	l7	lg	s6
P231 ME	40^{H7}	63	14	30	55	15	32.0	3.5	3.0	109.5	M5
P232 ME	40^{H7}	63	14	30	55	15	32.0	3.5	3.0	141.5	M5
P331 ME	60^{H7}	75	19	41	75	18	41.5	3.5	4.0	145.5	M5
P332 ME	40^{H7}	63	14	30	55	15	32.0	3.5	3.0	163.0	M5
P431 ME	95^{H7}	115	24	41	100	21	42.5	4.0	3.5	165.5	M8
P432 ME	60^{H7}	75	19	41	75	18	41.5	3.5	4.0	202.5	M5
P531 ME	110^{H7}	130	32	51	120	24	54.0	4.0	4.5	210.5	M8
P532 ME	95^{H7}	115	24	41	100	21	42.5	4.0	3.5	239.5	M8
P731 ME	130^{H7}	165	38	61	150	26	66.0	5.5	4.5	264.5	M10
P732 ME	110^{H7}	130	32	51	120	24	54.0	4.0	4.5	302.5	M8
P831 ME	180^{H7}	215	48	83	204	35	80.5	5.5	8.5	311.5	M12
P832 ME	130^{H7}	165	38	61	150	26	66.0	5.5	4.5	356.5	M10
P931 ME	180^{H7}	215	60	85	230	43	91.5	6.0	10.5	382.5	M12
P932 ME	180^{H7}	215	48	83	204	35	80.5	5.5	8.5	463.5	M12

In the table above, you will find example dimensions for the motor connection for the ME motor adapter. Note that when dimension c is lengthened (depending on the motor used), dimensions c6, l5 and lg are also lengthened accordingly. You will find additional motor connection dimensions for motor adapters ME, MEL, MF and MFL in our STOBER Configurator at http://configurator.stober.com. Here, you can directly download a 3D model of your drive.

PH Series: INLINE — Flange Output

PH Features

- 4:1 to 121:1 ratios (higher ratios available. Contact STOBER.)
- Quiet running (As low as 55dB(A))
- High load capacity and tilting rigidity through symmetrical bearing arrangement
- FKM seals for extended gearbox life
- Large motor input option to accept bigger diameter motor shafts so you don't use an oversized gearbox
- Error free motor mounting and quick changeover with toleranced pilot on motor plate
- Low no load running torque, giving you more torque for your application
- Magnetic oil filtration to remove contaminants to prevent breakdowns
- Build and ship in one day
- Assembled in the USA

STOBER PH Series Servo Precision Planetary Gearheads are designed for applications that demand torsional stiffness and tilting rigidity. The advanced lines can handle high accuracy machines. Every gearbox is made to order. STOBER will custom whatever you need to fit your application. Contact us today to learn more.

All PH Series and select PHV Series SHIP in 1 DAY!

NO EXPEDITE FEE FOR 24 HOUR SERVICE

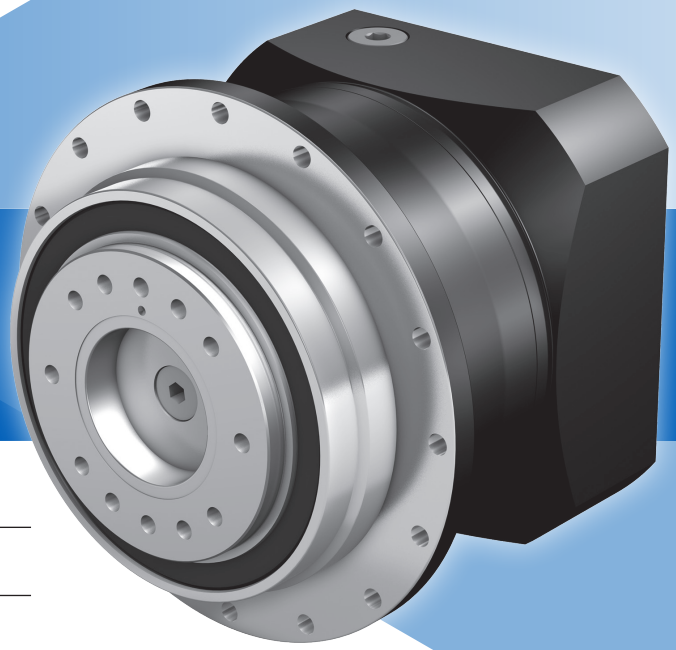

General Specifications

Ambient Temperature	0°C to +40°C (104°F) [Unit temperature <90°C Max]
Backlash	≤1 arcmins (see performance overview page 30)
Coating	Black (RAL-9005)
Degree of Protection	IP65
Direction of Rotation	Input and output rotate the SAME direction
Efficiency	1 stage 96%; 2 stage 93%; 3 stage 90%
Input RPM	Up to 8,000 RPM
Installation	Requires 12.9 fasteners. See page 288 for more information
Lubrication	Lubricated for life – standard Mobil SHC629; option food grade Mobil SHC CIBUS 150
Mounting Position	Unrestricted, see page 31
Warranty	5 Year Limited (2 Years on normal wear items: bearings, seals, etc.)



Overview

Selection Options *At-a-Glance*

Using the **Selection Data** table later in this section, select the PH Series Gearhead with the appropriate performance and design options tailored to your motor choice and exact application requirements. Use the part number guide below as a reference to build a part number for the complete gearhead assembly.

Part Number Examples:

1	2	3	4	5	6	7	8	9	0	!
PH	3	3	1	S	F	S	S	0040	ME	L
PHV	9	3	3		F			0121	ME	L

	Design Option	Part Number Code	Description
1	**Series**	PH PHV	Rotating flange output planetary Rotating flange output planetary — 3 Stage (size 9-10 only)
2	**Size**	3 4 5 7 8 9 10	7 sizes of gearhead
3	**Generation**	3 4	Version of gearhead 3 Sizes3-8 Version of gearhead 4 Sizes 9 and 10
4	**# of Stages**	1 2 3	One stage for ratios of ≤ 10:1 Two stage for ratios >10:1 Three stage (PHV: Size 9-10)
5	**Housing**	S	Standard
6	**Output**	F	Flange output
7	**Bearing**	S V	Standard Reinforced Bearing (PH3-PH5)
8	**Backlash**	S R	Standard Backlash Reduced backlash (PH3-9 only)
9	**Ratio**	0040	Ratios range from 4:1 to 100:1 (0040=4:1; 0160=16:1; 1000=100:1, etc.)
0	**Motor Adapter**	ME MF MB	Motor Adapter with EasyAdapt coupling Motor Adapter with FlexiAdapt coupling (PH3-8)(Contact factory for this option) ServoStop motor adapter with brake (Contact factory for this option)
!	**Options**	L	Large Input

Options

ME Adapter Option

- MSS1 Seal – special input seal for longer life (For sizes PH5-8). Contact factory for this option.

Integrated Safety Brake

- ServoStop – provides dynamic braking during power failures or emergency stops in hazardous situations. Contact factory for this option.

Coating Option

- Available with multi-layer, industrial 316 stainless steel epoxy coating. Contact factory for this option.

Large Input

- Accommodates a larger diameter motor shaft without going to a larger size gearbox.

ATEX

- ATmosphere EXplosible – rated for explosive environments. Contact factory for this option and allow additional time for delivery.

Rack and Pinion Systems

- PH available with rack and pinion. Contact factory for this option.

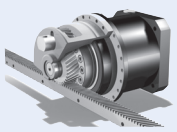

PH Performance Overview

PH Series performance is dependent on several factors including duty cycle, bearing design, gearhead size and stage configuration, among others. Use the chart below for preliminary evaluation, then use the following performance chart and selection information on the following pages for specific performance sizing and selection.

		Size	3		4		5	
		# of Stages	1	2	1	2	1	2
Acceleration Torque M_{2BMAX}	Nm		80		189		385	
Output Torque Nom. [1] M_{2N}	Nm		45		120		296	
Torsional Stiffness C_2	Nm/arcmin		15		36		91	
Torsional Backlash [2]	arcmin	Δϕ	≤4		≤3		≤3	
		Δϕ Reduced	≤2		≤1		≤1	
Input Speed Max. n_{1MAX}	rpm	Continuous	5500	6000	3500	4500	3300	4000
		Cyclic	8000	8000	7000	8000	6500	8000
Efficiency (@nom torque)	%		96	94	96	94	96	94
Weight	kg		2.2	2.4	4.8	5.2	7.7	8.8
	lbs		4.8	5.28	10.6	11.4	16.9	19.4
Noise [3]	dB(A)		≤55		≤56		≤57	
Performance by Bearing Design Option [4]								
Permitted Axial Force F_{2ax100}	N		1650		2150		4150	
Permitted Tilting Torque M_{2K100}	Nm		101		296		475	
Tilting Stiffness C_{2K}	Nm/arcmin		75		192		429	
Performance by Reinforced Bearing Design Option – Choose V Option [4]								
Permitted Axial Force F_{2ax100}	N		2200		2900		5500	
Permitted Tilting Torque ≤100RPM M_{2K100}	Nm		150		354		572	
Tilting Stiffness C_{2K}	Nm/arcmin		80		217		478	

[1] *Ratings based on input speed (n_1) of 1500 RPM. For torque at higher input speeds (M_{2NX}) solve the formula: where n_1 = Actual Input Speed.*

$$M_{2NX} = \frac{M_{2N}}{\sqrt[3]{\frac{n_1}{1500}}}$$

[2] *Tested at 1.5% of nominal torque and recorded on the output side of the gearhead. For lower backlash, contact STOBER technical support.*

[3] *Measurement at one (1) meter distance with input speed (n_1) of 1500 RPM.*

[4] *Rating based on output speed (n_2) of 100 RPM. For values at other speeds see page 33.*

Overview



Note: Overview data is general. Actual data is dependent on case size and ratio

	7		8		9		10	
	1	2	1	2	2	3	2	3
	882		2100		5000		7500	
	600		1557		3000		5000	
	207		561		1200		1748	
	≤3 ≤1		≤3 ≤1		≤3 –		≤3 –	
	2500 5000	3700 7000	2200 4000	3000 6000	2800 4500	2500 4500	2800 4500	2500 4500
	96	94	96	94	96	94	94	92
	15.9 35		35.9 79	39.7 87.3	75.2 166	66.6 147	90.6 200	90 198
	≤58		≤59		≤59		≤59	
	6150		10,050		33,000		50,000	
	1466		3486		7500		8800	
	500		1550		7500		9500	
	—		—		—		—	
	—		—		—		—	
	—		—		—		—	

PH Series Three-Stage Mounting Position

For all three stage units, the amount of lubrication depends on the mounting position.

When ordering any of these three stage units, the mounting position (EL1, EL5 or EL6) MUST BE SPECIFIED WITH THE ORDER!

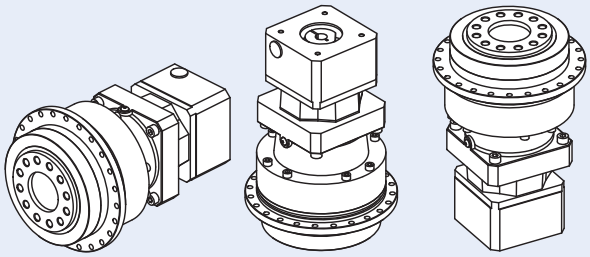

EL1 EL5 EL6

PH Series Motor Mounting Plate Option

(Motor information required with Motor Adapter ME option)

STOBER Servo Gearheads fit the motor of your choice with the appropriate motor mounting plate assembled between the motor and the gearhead.

NOTE: When ordering a gearhead:

- Specify the motor manufacturer and part number
- Provide the motor drawing with dimensions, or specify the motor mounting dimensions (per the list shown at right)

For a precise dimension on a specific motor, or for general assistance, we recommend you contact STOBER Technical Support.

Customer Required Dimensions for Properly Sized Motor Mounting Plate

d2	Motor Shaft Diameter (If an adapter bushing is required it will be supplied with the motor plate.)
b6	Pilot Diameter
e6	Bolt Circle Diameter
s6	Bolt Diameter
l5	Motor Shaft Length
f6	Pilot Length
a6	Square Flange (Optional – motor plate will typically be made to match this dimension.)

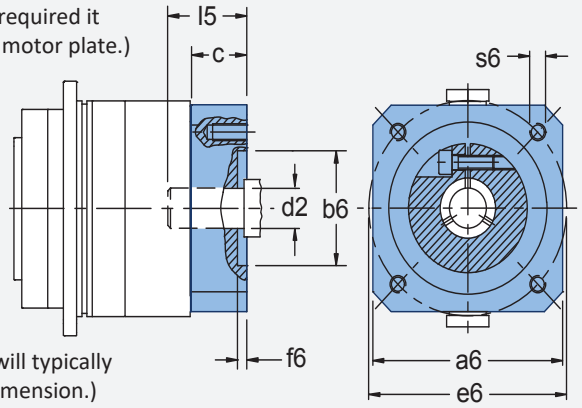

Motor Mounting Plate Dimensions — mm (Part Number Specific)

d2	c	Series / Size / # of Stages													
			3		4		5		7		8		9		10	
Max. Motor Shaft Ø	Min. Motor Plate Thickness*		1	2	1	2	1	2	1	2	1	2	2	3	2	3
14	15	PH		332												
19	18	PH	331	332...L		432										
24	21	PH	331...L		431	432...L		532								
32	24	PH			431...L		531	532...L		732						
38	25	PH					531...L		731	732...L		832				
		PHV												943		
48	33	PH							731...L		831	832...L	942		1042	
		PHV												943...L		1043
55		PH														
60		PH									831...L		942...L		1042...L	

** Note that the c motor plate thickness is determined by the motor shaft length. The minimum motor plate thickness is the value listed.*



Overview

PH No Load Running Torque*

		Input Ratio T_R												
		One Stage				Two Stage								
Unit		4	5	7	10	16	20	25	28	35	40	50	70	100
PH3	Nm	–	0.26	.016	.016	–	0.18	0.13	0.13	0.13	0.13	0.13	0.13	0.13
PH4	Nm	0.33	0.33	0.23	0.18	0.16	0.16	0.16	0.16	0.16	0.16	0.16	0.16	0.16
PH5	Nm	0.70	0.60	0.40	0.30	0.33	0.28	0.23	0.23	0.23	0.23	0.23	0.23	0.23
PH7	Nm	1.43	1.13	0.83	0.63	0.50	0.40	0.40	0.30	.030	0.30	0.30	0.30	0.30
PH8	Nm	2.25	1.85	1.35	0.95	0.73	0.73	0.63	0.53	0.53	0.53	0.53	0.53	0.53

** Torque is measured with the input at 2000 RPM and an ambient temperature of 20° C.*

PH Series Permissible Motor Tilting Torque

The permissible tilting torque of the motor attached to the gear unit is a result of the static and dynamic load "F" from the motor weight, mass acceleration, and vibration multiplied by the distance from the center of gravity "l_S" of the motor.

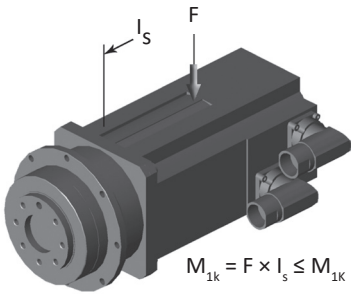

M_{1K}	PH332_ME	PH331_ME PH432_ME	PH431_ME PH532_ME	PH531_ME PH732_ME	PH731_ME PH832_ME PHV943_ME	PH831_ME PH942_ME PH1042_ME PHV1043_ME
Nm	10	20	40	80	200	400

PH Series Permissible Output Shaft Load and Tilting Moments – Standard Bearings

	Z_2	F_{2ax100}	$F_{2rad100}$	$F_{2rad,acc}$	M_{2K100}	$M_{2K,acc}$	C_{2K}
	Distance of Shaft Shoulder to Center of Output Bearing	Permitted Axial Force	Permitted Radial Force ≤100RPM	Radial Acceleration Force	Permitted Tilting Torque ≤100RPM	Permitted Acceleration Tilting Torque	Tilting Stiffness
Size	mm	N	N	N	Nm	Nm	Nm/arcmin
3	62.5	1650	1613	1613	101	101	75
4	83.0	2150	3095	3571	257	296	192
5	97.0	4150	4536	4897	440	475	429
7	86.0	6150	17,045	17,045	1466	1466	500
8	125.5	10,050	27,778	27,778	3486	3486	1550
9	155.0	33,000	48,387	70,968	7500	11,000	7500
10	171.0	50,000	51,462	73,099	8800	12,500	9500

PH Series Permissible Output Shaft Load and Tilting Moments – Reinforced Bearings

	Z_2	F_{2ax100}	$F_{2rad100}$	$F_{2rad,acc}$	M_{2K100}	$M_{2K,acc}$	C_{2K}
	Distance of Shaft Shoulder to Center of Output Bearing	Permitted Axial Force	Permitted Radial Force ≤100RPM	Radial Acceleration Force	Permitted Tilting Torque ≤100RPM	Permitted Acceleration Tilting Torque	Tilting Stiffness
Size	mm	N	N	N	Nm	Nm	Nm/arcmin
3	66.5	2200	2250	2250	150	150	80
4	88.5	2900	4000	4000	354	354	217
5	104.0	5000	5500	5500	572	572	478

PH Series Load/Life/Speed Calculations

The permissible load and tilting moment values are based on an output speed of 100 RPM. For higher speeds the following applies, where n_2 is the desired speed:

$$F_{2radN} = \frac{F_{2rad100}}{\sqrt[3]{\frac{n_2}{100rpm}}} \qquad F_{2AX} = \frac{F_{2ax100}}{\sqrt[3]{\frac{n_2}{100}}} \qquad M_{2KX} = \frac{M_{2K100}}{\sqrt[3]{\frac{n_2}{100}}}$$

The application output tilting moment should be determined by the following formula:

$$M_{2k,acc*} = \frac{2 \bullet F_{2ax100*} \bullet y_2 + F_{2rad,acc*} \bullet (x_2 + Z_2)}{1000} \leq M_{2k,acc}$$

$$M_{2k,eq*} = \sqrt[3]{\frac{n_{2b1} \bullet t_{b1} \bullet M_{2kb1}{}^3 + ... + n_{2bn} \bullet t_{bn} \bullet M_{2kbn}{}^3}{n_{2b1} \bullet t_{b1} + ... + n_{2bn} \bullet t_{bn}}} \leq M_{2kN}$$

$$F_{2rad,eq*} = \sqrt[3]{\frac{n_{2b1} \bullet t_{b1} \bullet F_{2rb1}{}^3 + ... + n_{2bn} \bullet t_{bn} \bullet F_{2rbn}{}^3}{n_{2b1} \bullet t_{b1} + ... + n_{2bn} \bullet t_{bn}}} \leq F_{2radN}$$

Where:

Z_2	Distance of Shaft Shoulder to Center of Output Bearing
n_2	Actual Average Output Speed
X_2	Distance of the Shaft Shoulder to the Force Application Point
Y_2	Distance of the Shaft Axis to the Axial Force Application Point
F_{2ax*}	Actual Axial Force at Gear Unit Output
F_{2ax100}	Permitted Axial Force
$F_{2rad100}$	Permitted Radial Force ≤100RPM
$F_{2rad,acc}$	Radial Acceleration Force
$F_{2rad,acc*}$	Radial Acceleration Force at Gear Unit Output
M_{2K100}	Permitted Tilting Torque ≤100RPM
$M_{2K,acc}$	Permitted Acceleration Tilting Torque
$M_{2k,acc*}$	Permitted Acceleration Tilting Torque at Gear Unit Output
C_{2K}	Tilting Stiffness

All formulas shown are based on METRIC values

Upper case letters are permissible values. Lower case letters are for existing values.

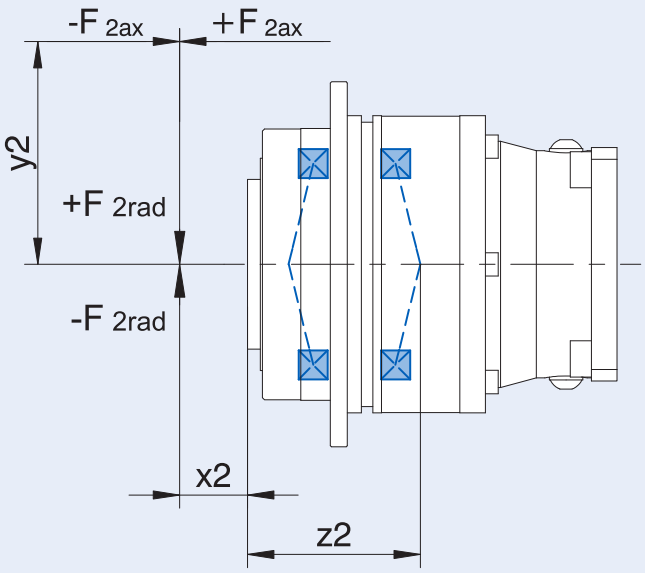

The hours of life (L_h) of the unit can be determined by the following formula:

bearing life for duty cycle ≤ 40%

L_h > 10,000 hours if M_{2K100}/M_{2A*} < 1.25 and > 1
L_h > 20,000 hours if M_{2K100}/M_{2A*} > 1.25 and > 1.5
L_h > 30,000 hours if M_{2K100}/M_{2A*} < 1.5

bearing life for duty cycle ≥ 40%

$$L_{hA} = L_h \left(\frac{40\%}{\text{Duty Cycle}}\right)$$



Selection Data

Exact Ratio (i)	Output Torque: Nom. M_{2N} [1] Nm	Output Torque: Accel. M_{2acc} Nm	Output Torque: Accel. Torque for Reduced Backlash M_{2accHT} Nm	Output Torque: Peak M_{2NOT} [2] Nm	Backlash $\Delta\phi_2$ arcmin	Red. Backlash $\Delta\phi_{2red}$ arcmin	Part Number* (Gearhead + Input)	Max. Input Speed RPM (n1): Cont.	Max. Input Speed RPM (n1): Cyclic	Motor Shaft [3] Max Ø d_{MW} mm	Input Inertia J_1 kgcm²	Tors. Stiffness C_2 Nm/arcmin	Oper. Noise L_{pA} dB(A)
PH3													
5.000	45	80	85	160	4	2	PH331_0050 ME	4000	8000	≤19	0.46	15	58
							PH331_0050 MEL			≤24	0.89		
7.000	45	75	77	150	4	2	PH331_0070 ME	5000	8000	≤19	0.42	12	57
							PH331_0070 MEL			≤24	0.85		
10.00	36	60	60	120	4	2	PH331_0100 ME	5500	8000	≤19	0.40	9.1	55
							PH331_0100 MEL			≤24	0.83		
20.00	45	80	85	160	4	2	PH332_0200 ME	5500	8000	≤14	0.14	14	59
							PH332_0200 MEL			≤19	0.42		
25.00	50	80	85	160	4	2	PH332_0250 ME	6000	8000	≤14	0.12	14	57
							PH332_0250 MEL			≤19	0.41		
28.00	50	75	75	150	4	2	PH332_0280 ME	6000	8000	≤14	0.14	12	59
							PH332_0280 MEL			≤19	0.42		
35.00	50	80	85	160	4	2	PH332_0350 ME	6000	8000	≤14	0.12	14	56
							PH332_0350 MEL			≤19	0.41		
40.00	50	67	67	134	4	2	PH332_0400 ME	6000	8000	≤14	0.14	9.0	59
							PH332_0400 MEL			≤19	0.42		
50.00	50	75	75	150	4	2	PH332_0500 ME	6000	8000	≤14	0.12	12	54
							PH332_0500 MEL			≤19	0.41		
70.00	53	69	69	138	4	2	PH332_0700 ME	6000	8000	≤14	0.10	11	54
							PH332_0700 MEL			≤19	0.40		
100.0	46	60	60	120	4	2	PH332_1000 ME	6000	8000	≤14	0.10	8.9	54
							PH332_1000 MEL			≤19	0.39		

[1] *Based on input speed of 1500 RPM. See page 34 for details on torque calculations.*
[2] *Maximum momentary torque for emergency stops or heavy shock load. (Admissible stops per life of gearhead = 1,000 stops maximum.)*
[3] *For additional motor shaft sizes or smaller inertia value, please visit configurator.stober.com*
* *ME= Motor Adapter L=Large Input Option*

Exact Ratio (i)	Output Torque: Nom. M_{2N}	Output Torque: Accel. M_{2acc}	Output Torque: Accel. Torque for Reduced Backlash M_{2accHT}	Output Torque: Peak M_{2NOT}	Back-lash $\Delta\phi_2$	Red. Back-lash $\Delta\phi_{2red}$	Part Number* (Gearhead + Input)	Max. Input Speed RPM (n1): Cont.	Max. Input Speed RPM (n1): Cyclic	Motor Shaft [3] Max Ø d_{MW}	Input Inertia J_1	Tors. Stiffness C_2	Oper. Noise L_{pA}
	Nm	Nm	Nm	Nm	arcmin	arcmin				mm	kgcm²	Nm/ arcmin	dB(A)
PH4													
4.000	90	136	189	273	3	1	PH431_0040 ME	2600	5000	≤24	1.3	36	61
							PH431_0040 MEL			≤32	2.9		
5.000	90	172	189	344	3	1	PH431_0050 ME	3000	6000	≤24	1.1	35	59
							PH431_0050 MEL			≤32	2.7		
7.000	90	160	175	320	3	1	PH431_0070 ME	3200	6000	≤24	0.99	30	58
							PH431_0070 MEL			≤32	2.6		
10.00	75	115	115	230	3	1	PH431_0100 ME	3500	7000	≤24	0.91	21	56
							PH431_0100 MEL			≤32	2.5		
16.00	90	160	173	312	3	1	PH432_0160 ME	4000	8000	≤19	0.52	31	60
							PH432_0160 MEL			≤24	0.95		
20.00	95	150	150	299	3	1	PH432_0200 ME	4000	8000	≤19	0.47	31	60
							PH432_0200 MEL			≤24	0.90		
25.00	100	161	174	322	3	1	PH432_0250 ME	4500	8000	≤19	0.47	32	58
							PH432_0250 MEL			≤24	0.90		
28.00	95	160	173	312	3	1	PH432_0280 ME	4500	8000	≤19	0.50	31	57
							PH432_0280 MEL			≤24	0.93		
35.00	110	160	174	320	3	1	PH432_0350 ME	4500	8000	≤19	0.46	32	57
							PH432_0350 MEL			≤24	0.89		
40.00	110	155	169	310	3	1	PH432_0400 ME	4500	8000	≤19	0.50	30	55
							PH432_0400 MEL			≤24	0.92		
50.00	120	159	174	318	3	1	PH432_0500 ME	4500	8000	≤19	0.46	31	55
							PH432_0500 MEL			≤24	0.89		
70.00	120	158	164	316	3	1	PH432_0700 ME	4500	8000	≤19	0.42	27	55
							PH432_0700 MEL			≤24	0.85		
100.0	85	110	110	220	3	1	PH432_1000 ME	4500	8000	≤19	0.40	20	55
							PH432_1000 MEL			≤24	0.83		

[1] *Based on input speed of 1500 RPM. See page 34 for details on torque calculations.*
[2] *Maximum momentary torque for emergency stops or heavy shock load. (Admissible stops per life of gearhead = 1,000 stops maximum.)*
[3] *For additional motor shaft sizes or smaller inertia value, please visit configurator.stober.com*
* *ME= Motor Adapter L=Large Input Option*



Exact Ratio (i)	Output Torque: Nom. [1] M_{2N} Nm	Output Torque: Accel. M_{2acc} Nm	Output Torque: Accel. Torque for Reduced Backlash M_{2accHT} Nm	Output Torque: Peak [2] M_{2NOT} Nm	Back-lash $\Delta\phi_2$ arcmin	Red. Back-lash $\Delta\phi_{2red}$ arcmin	Part Number* (Gearhead + Input)	Max. Input Speed RPM (n1): Cont.	Max. Input Speed RPM (n1): Cyclic	Motor Shaft [3] Max Ø d_{MW} mm	Input Inertia J_1 kgcm²	Tors. Stiffness C_2 Nm/arcmin	Oper. Noise L_{pA} dB(A)
PH5													
4.000	210	355	387	696	3	1	PH531_0040 ME	2200	5000	≤32	4.1	90	62
							PH531_0040 MEL			≤38	7.7	91	
5.000	220	385	400	705	3	1	PH531_0050 ME	2500	5500	≤32	3.5	91	60
							PH531_0050 MEL			≤38	7.1		
7.000	210	370	387	705	3	1	PH531_0070 ME	3000	6000	≤32	3.1	75	59
							PH531_0070 MEL			≤38	6.6		
10.00	180	288	288	575	3	1	PH531_0100 ME	3300	6500	≤32	2.8	53	57
							PH531_0100 MEL			≤38	6.3		
16.00	230	355	355	696	3	1	PH532_0160 ME	3500	7000	≤24	1.2	82	61
							PH532_0160 MEL			≤32	2.8		
20.00	250	370	387	705	3	1	PH532_0200 ME	3500	7000	≤24	1.1	85	61
							PH532_0200 MEL			≤32	2.7		
25.00	260	385	400	705	3	1	PH532_0250 ME	3700	7500	≤24	1.0	84	59
							PH532_0250 MEL			≤32	2.7		
28.00	240	355	387	696	3	1	PH532_0280 ME	4000	8000	≤24	1.1	79	58
							PH532_0280 MEL			≤32	2.7	80	
35.00	290	385	400	705	3	1	PH532_0350 ME	4000	8000	≤24	1.0	84	58
							PH532_0350 MEL			≤32	2.6		
40.00	260	355	356	696	3	1	PH532_0400 ME	4000	8000	≤24	1.1	74	56
							PH532_0400 MEL			≤32	2.7		
50.00	296	385	400	705	3	1	PH532_0500 ME	4000	8000	≤24	1.0	79	56
							PH532_0500 MEL			≤32	2.6		
70.00	284	370	387	705	3	1	PH532_0700 ME	4000	8000	≤24	0.93	70	56
							PH532_0700 MEL			≤32	2.5		
100.0	221	288	288	575	3	1	PH532_1000 ME	4000	8000	≤24	0.88	52	56
							PH532_1000 MEL			≤32	2.5		

[1] *Based on input speed of 1500 RPM. See page 34 for details on torque calculations.*
[2] *Maximum momentary torque for emergency stops or heavy shock load. (Admissible stops per life of gearhead = 1,000 stops maximum.)*
[3] *For additional motor shaft sizes or smaller inertia value, please visit configurator.stober.com*
* *ME= Motor Adapter L=Large Input Option*

Exact Ratio (i)	Output Torque: Nom. [1] M_{2N} Nm	Output Torque: Accel. M_{2acc} Nm	Output Torque: Accel. Torque for Reduced Backlash M_{2accHT} Nm	Output Torque: Peak [2] M_{2NOT} Nm	Back-lash $\Delta\phi_2$ arcmin	Red. Back-lash $\Delta\phi_{2red}$ arcmin	Part Number* (Gearhead + Input)	Max. Input Speed RPM (n1): Cont.	Max. Input Speed RPM (n1): Cyclic	Motor Shaft [3] Max Ø d_{MW} mm	Input Inertia J_1 kgcm²	Tors. Stiffness C_2 Nm/ arcmin	Oper. Noise L_{pA} dB(A)
PH7													
4.000	440	840	924	1321	3	1	PH731_0040 ME	1900	4000	≤38	12	207	63
				1680			PH731_0040 MEL			≤48	22	219	
5.000	440	882	924	1651	3	1	PH731_0050 ME	2200	5000	≤38	9.5	190	61
				1720			PH731_0050 MEL			≤48	20	196	
7.000	440	869	869	1720	3	1	PH731_0070 ME	2500	5000	≤38	8.0	160	60
							PH731_0070 MEL			≤48	18	162	
10.00	350	575	575	1150	3	1	PH731_0100 ME	2500	5000	≤38	7.2	123	58
							PH731_0100 MEL			≤48	17		
16.00	450	740	740	1480	3	1	PH732_0160 ME	3000	6000	≤32	3.8	200	62
							PH732_0160 MEL			≤38	7.3		
20.00	460	805	845	1610	3	1	PH732_0200 ME	3000	6000	≤32	3.4	186	62
							PH732_0200 MEL			≤38	6.9		
25.00	500	866	908	1720	3	1	PH732_0250 ME	3500	7000	≤32	3.3	185	60
							PH732_0250 MEL			≤38	6.8		
28.00	540	770	880	1540	3	1	PH732_0280 ME	3700	7000	≤32	3.6	194	59
							PH732_0280 MEL			≤38	7.1		
35.00	540	866	908	1720	3	1	PH732_0350 ME	3700	7000	≤32	3.2	183	59
							PH732_0350 MEL			≤38	6.7		
40.00	540	770	770	1540	3	1	PH732_0400 ME	3700	7000	≤32	3.5	182	57
							PH732_0400 MEL			≤38	7.1		
50.00	600	830	834	1660	3	1	PH732_0500 ME	3700	7000	≤32	3.2	176	57
							PH732_0500 MEL			≤38	6.7		
70.00	600	809	847	1617	3	1	PH732_0700 ME	3700	7000	≤32	2.9	154	57
							PH732_0700 MEL			≤38	6.4		
100.0	423	550	550	1100	3	1	PH732_1000 ME	3700	7000	≤32	2.7	121	57
							PH732_1000 MEL			≤38	6.2		

[1] *Based on input speed of 1500 RPM. See page 34 for details on torque calculations.*
[2] *Maximum momentary torque for emergency stops or heavy shock load. (Admissible stops per life of gearhead = 1,000 stops maximum.)*
[3] *For additional motor shaft sizes or smaller inertia value, please visit configurator.stober.com*
* *ME= Motor Adapter L=Large Input Option*



Exact Ratio (i)	Output Torque: Nom. [1] M_{2N} Nm	Output Torque: Accel. M_{2acc} Nm	Output Torque: Accel. Torque for Reduced Backlash M_{2accHT} Nm	Output Torque: Peak [2] M_{2NOT} Nm	Back-lash $\Delta\phi_2$ arcmin	Red. Back-lash $\Delta\phi_{2red}$ arcmin	Part Number* (Gearhead + Input)	Max. Input Speed RPM (n1): Cont.	Max. Input Speed RPM (n1): Cyclic	Motor Shaft [3] Max Ø d_{MW} mm	Input Inertia J_1 kgcm²	Tors. Stiffness C_2 Nm/arcmin	Oper. Noise L_{pA} dB(A)
PH8													
4.000	880	1820	2112	2408	3	1	PH831_0040 ME	1400	3500	≤48	44	512	64
				3639			PH831_0040 MEL			≤60	72	553	
5.000	1100	2100	2300	3010	3	1	PH831_0050 ME	1600	4000	≤48	33	534	62
				4200			PH831_0050 MEL			≤60	62	561	
7.000	1000	2000	2112	4000	3	1	PH831_0070 ME	2000	4000	≤48	26	441	61
							PH831_0070 MEL			≤60	54	450	
10.00	850	1392	1392	2784	3	1	PH831_0100 ME	2200	4000	≤48	22	338	59
							PH831_0100 MEL			≤60	50	341	
16.00	1100	2000	2200	4000	3	1	PH832_0160 ME	2500	4500	≤38	11	490	63
							PH832_0160 MEL			≤48	22	494	
20.00	1250	2100	2300	4200	3	1	PH832_0200 ME	2500	4500	≤38	9.4	518	63
							PH832_0200 MEL			≤48	20	521	
25.00	1300	2100	2300	4200	3	1	PH832_0250 ME	2700	5500	≤38	9.0	516	61
							PH832_0250 MEL			≤48	19	518	
28.00	1100	2000	2000	3929	3	1	PH832_0280 ME	3000	6000	≤38	10	477	60
							PH832_0280 MEL			≤48	20	478	
35.00	1450	2100	2300	4200	3	1	PH832_0350 ME	3000	6000	≤38	8.7	509	60
							PH832_0350 MEL			≤48	19		
40.00	1100	1920	1936	3840	3	1	PH832_0400 ME	3000	6000	≤38	9.9	452	58
							PH832_0400 MEL			≤48	20		
50.00	1557	2100	2300	4200	3	1	PH832_0500 ME	3000	6000	≤38	8.5	490	58
							PH832_0500 MEL			≤48	19		
70.00	1422	1848	1936	3696	3	1	PH832_0700 ME	3000	6000	≤38	7.5	425	58
							PH832_0700 MEL			≤48	18		
100.0	1062	1380	1380	2760	3	1	PH832_1000 ME	3000	6000	≤38	6.9	333	58
							PH832_1000 MEL			≤48	17		

[1] *Based on input speed of 1500 RPM. See page 34 for details on torque calculations.*
[2] *Maximum momentary torque for emergency stops or heavy shock load. (Admissible stops per life of gearhead = 1,000 stops maximum.)*
[3] *For additional motor shaft sizes or smaller inertia value, please visit configurator.stober.com*
* *ME= Motor Adapter L=Large Input Option*

Exact Ratio (i)	Output Torque: Nom. [1] M_{2N} Nm	Output Torque: Accel. M_{2acc} Nm	Output Torque: Accel. Torque for Reduced Backlash M_{2accHT} Nm	Output Torque: Peak [2] M_{2NOT} Nm	Backlash $\Delta\phi_2$ arc-min	Red. Backlash $\Delta\phi_{2red}$ arcmin	Part Number* (Gearhead + Input)	Max. Input Speed RPM (n1): Cont.	Max. Input Speed RPM (n1): Cyclic	Motor Shaft [3] Max Ø d_{MW} mm	Input Inertia J_1 kgcm²	Tors. Stiffness C_2 Nm/arcmin	Oper. Noise L_{pA} dB(A)
PH9													
12.00	3000	4600	4600	6997	3.0	1.0	PH942_0120 ME	1800	3000	≤48	68	1200	66
				9200			PH942_0120 MEL			≤60	96	1223	
16.00	3000	5000	5000	9330	3.0	1.0	PH942_0160 ME	2000	3500	≤48	40	1181	64
				10000			PH942_0160 MEL			≤60	68	1193	
18.00	3000	5000	5000	10000	3.0	1.0	PH942_0180 ME	1800	3000	≤48	62	1120	66
							PH942_0180 MEL			≤60	90	1129	
20.00	3000	5000	5000	10000	3.0	1.0	PH942_0200 ME	2500	4000	≤48	31	1174	62
							PH942_0200 MEL			≤60	59	1182	
24.00	3000	5000	5000	10000	3.0	1.0	PH942_0240 ME	2000	3500	≤48	37	1112	64
							PH942_0240 MEL			≤60	65	1117	
28.00	3500	5000	5000	10000	3.0	1.0	PH942_0280 ME	2800	4500	≤48	25	1147	61
							PH942_0280 MEL			≤60	53	1151	
30.00	3300	5000	5000	10000	3.0	1.0	PH942_0300 ME	2500	4000	≤48	29	1110	62
							PH942_0300 MEL			≤60	57	1113	
32.00	3200	4600	4600	9200	3.0	1.0	PH942_0320 ME	2800	4500	≤48	23	1105	60
							PH942_0320 MEL			≤60	51	1108	
40.00	3200	4600	4600	9200	3.0	1.0	PH942_0400 ME	2800	4500	≤48	21	1064	59
							PH942_0400 MEL			≤60	49	1066	
42.00	3500	5000	5000	10000	3.0	1.0	PH942_0420 ME	2800	4500	≤48	23	1099	61
							PH942_0420 MEL			≤60	52	1101	
48.00	3500	5000	5000	10000	3.0	1.0	PH942_0480 ME	2800	4500	≤48	22	1081	60
							PH942_0480 MEL			≤60	51	1083	
60.00	3500	5000	5000	10000	3.0	1.0	PH942_0600 ME	2800	4500	≤48	20	1064	59
							PH942_0600 MEL			≤60	49	1064	
61.00	2500	4250	4250	9000	3.0	1.0	PHV943_0610 ME	2500	4500	≤38	12	848	62
							PHV943_0610 MEL			≤48	22	849	
91.00	2500	4250	4250	9000	3.0	1.0	PHV943_0910 ME	2500	4500	≤38	8.7	837	62
							PHV943_0910 MEL			≤48	19	838	
121.0	2500	4250	4250	9000	3.0	1.0	PHV943_1210 ME	2500	4500	≤38	7.7	805	62
							PHV943_1210 MEL			≤48	18		

[1] *Based on input speed of 1500 RPM. See page 34 for details on torque calculations.*
[2] *Maximum momentary torque for emergency stops or heavy shock load. (Admissible stops per life of gearhead = 1,000 stops maximum.)*
[3] *For additional motor shaft sizes or smaller inertia value, please visit configurator.stober.com*
* *ME= Motor Adapter L=Large Input Option*



Exact Ratio (i)	Output Torque: Nom. M_{2N} Nm	Output Torque: Accel. M_{2acc} Nm	Output Torque: Accel. Torque for Reduced Backlash M_{2accHT} Nm	Output Torque: Peak M_{2NOT} Nm	Backlash $\Delta\phi_2$ arc-min	Red. Backlash $\Delta\phi_{2red}$ arcmin	Part Number* (Gearhead + Input)	Max. Input Speed RPM (n1): Cont.	Max. Input Speed RPM (n1): Cyclic	Motor Shaft Max Ø d_{MW} mm	Input Inertia J_1 kgcm²	Tors. Stiffness C_2 Nm/arcmin	Oper. Noise L_{pA} dB(A)
PH10													
18.00	4600	6900	–	10496	3.0	–	PH1042_0180 ME	1800	3000	≤48	64	1727	66
				13800			PH1042_0180 MEL			≤60	92	1748	
24.00	4700	7500	–	13995	3.0	–	PH1042_0240 ME	2000	3500	≤48	38	1725	64
				15000			PH1042_0240 MEL			≤60	66	1737	
30.00	5000	7500	–	15000	3.0	–	PH1042_0300 ME	2500	4000	≤48	30	1719	62
							PH1042_0300 MEL			≤60	58	1726	
42.00	5000	7500	–	15000	3.0	–	PH1042_0420 ME	2800	4500	≤48	24	1693	61
							PH1042_0420 MEL			≤60	52	1697	
60.00	4900	7000	–	14000	3.0	–	PH1042_0600 ME	2800	4500	≤48	21	1611	59
							PH1042_0600 MEL			≤60	49	1613	
61.00	4000	7500	–	15000	3.0	–	PHV1043_0610 ME	2500	4500	≤48	24	1368	63
91.00	4000	7500	–	15000	3.0	–	PHV1043_910 ME	2500	4500	≤48	21	1341	63

[1] *Based on input speed of 1500 RPM. See page 34 for details on torque calculations.*
[2] *Maximum momentary torque for emergency stops or heavy shock load. (Admissible stops per life of gearhead = 1,000 stops maximum.)*
[3] *For additional motor shaft sizes or smaller inertia value, please visit configurator.stober.com*
* *ME= Motor Adapter L=Large Input Option*

PH Standard Input

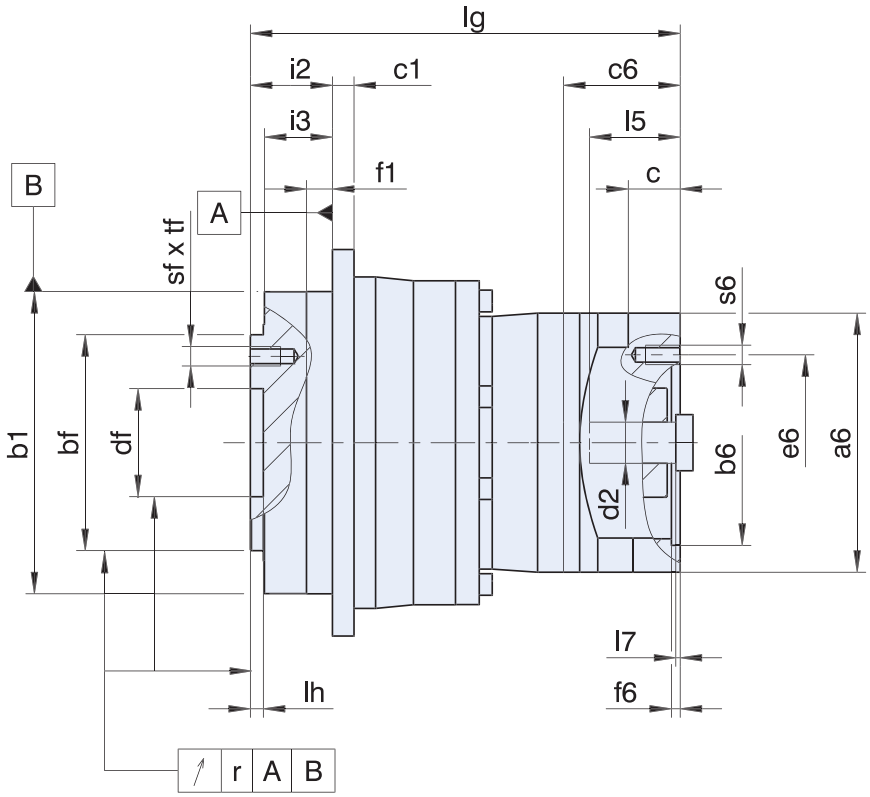

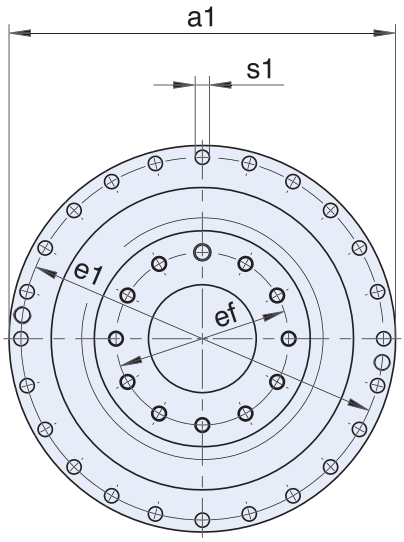

PH3 | PH4

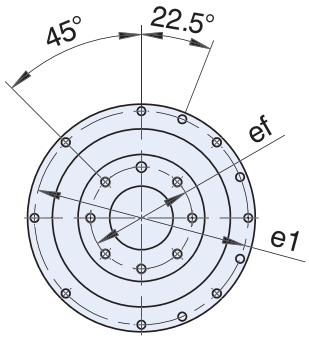

PH5

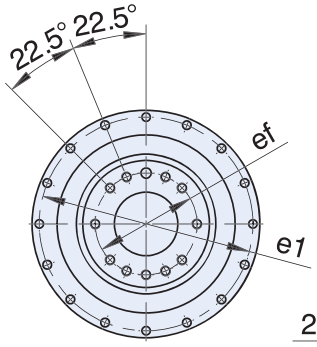

PH7 | PH8

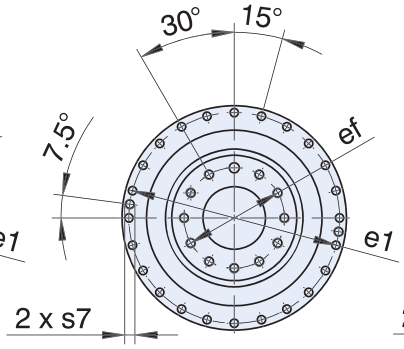

PH9 | PH10

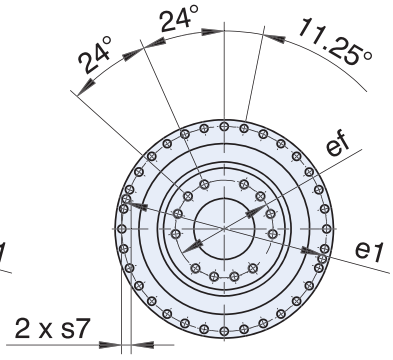

** See Motor Mounting Plate Option, page 32 for details.*



Dimensional Data

Table 1 Dimensions (mm)

Unit	Øa1	Øb1	Øbf	c1	Ødf	Øe1	Øef	f1	i2	i3	lh	r	Øs1	s7	sf	tf
PH331	86	64^{h7}	40^{h7}	4	20.0^{H6}	79	31.5	7	19.5	16.5	4	0.020	4.5	–	M5	7
PH332	86	64^{h7}	40^{h7}	4	20.0^{H6}	79	31.5	7	19.5	16.5	4	0.020	4.5	–	M5	7
PH431	118	90^{h7}	63^{h7}	7	31.5^{H6}	109	50.0	10	30.0	24.0	6	0.020	5.5	–	M6	11
PH432	118	90^{h7}	63^{h7}	7	31.5^{H6}	109	50.0	10	30.0	24.0	6	0.020	5.5	–	M6	11
PH531	145	110^{h7}	80^{h7}	8	40.0^{H6}	135	63.0	12	29.0	23.0	6	0.020	5.5	–	M6	11
PH532	145	110^{h7}	80^{h7}	8	40.0^{H6}	135	63.0	12	29.0	23.0	6	0.020	5.5	–	M6	11
PH731	179	140^{h7}	100^{h7}	10	50.0^{H6}	168	80.0	12	38.0	32.0	6	0.025	6.6	–	M8	14
PH732	179	140^{h7}	100^{h7}	10	50.0^{H6}	168	80.0	12	38.0	32.0	6	0.025	6.6	–	M8	14
PH831	247	200^{h7}	160^{h7}	12	80.0^{H6}	233	125.0	15	50.0	42.0	8	0.030	9.0	M10	M10	18
PH832	247	200^{h7}	160^{h7}	12	80.0^{H6}	233	125.0	15	50.0	42.0	8	0.030	9.0	M10	M10	18
PH942	300	255^{h7}	180^{h7}	18	90.0^{H6}	280	140.0	20	66.0	55.0	12	0.030	13.5	M8	M16	24
PHV943	300	255^{h7}	180^{h7}	18	90.0^{H6}	280	140.0	20	66.0	55.0	12	0.030	13.5	M8	M16	24
PH1042	330	285^{h7}	200^{h7}	20	95.0^{H6}	310	160.0	20	75.0	60.0	10	0.040	13.5	M10	M20	28
PHV1043	330	285^{h7}	200^{h7}	20	95.0^{H6}	310	160.0	20	75.0	60.0	10	0.040	13.5	M10	M20	28

Table 2 Dimensions (mm)

Unit	Øb6	Øe6	Ød2max	l5	□a6	c	c6	f6	l7	lg	s6
PH331_ME	60^{H7}	75	19	41	75	18	41.5	3.5	4.0	98.5	M5
PH332_ME	40^{H7}	63	14	30	55	15	32.0	3.5	3.0	116.0	M5
PH431_ME	95^{H7}	115	24	41	100	21	42.5	4.0	3.5	113.5	M8
PH432_ME	60^{H7}	75	19	41	75	18	41.5	3.5	4.0	150.5	M5
PH531_ME	110^{H7}	130	32	51	120	24	54.0	4.0	4.5	132.0	M8
PH532_ME	95^{H7}	115	24	41	100	21	42.5	4.0	3.5	161.0	M8
PH731_ME	130^{H7}	165	38	61	150	26	66.0	5.5	4.5	161.0	M10
PH732_ME	110^{H7}	130	32	51	120	24	54.0	4.0	4.5	199.0	M8
PH831_ME	180^{H7}	215	48	83	204	35	80.5	5.5	8.5	218.0	M12
PH832_ME	130^{H7}	165	38	61	150	26	66.0	5.5	4.5	263.0	M10
PH942_ME	180^{H7}	215	48	83	204	35	80.5	5.5	8.5	334.5	M12
PHV943_ME	130^{H7}	165	38	61	150	26	66.0	5.5	4.5	294.0	M10
PH1042_ME	180^{H7}	215	48	83	204	35	80.5	5.5	8.5	350.5	M12
PHV1043_ME	180^{H7}	215	48	83	204	35	80.5	5.5	8.5	344.0	M12

In the table above, you will find example dimensions for the motor connection for the ME motor adapter. Note that when dimension c is lengthened (depending on the motor used), dimensions c6, l5 and lg are also lengthened accordingly. You will find additional motor connection dimensions for motor adapters ME, MEL, MF and MFL in our STOBER Configurator at http://configurator.stober.com. Here, you can directly download a 3D model of your drive.

PHQ Series: INLINE — Flange Output

PHQ Features

- 4:1 to 600:1 ratios (higher ratios available. Contact STOBER.)
- Quiet running (As low as 55dB(A))
- High load capacity and tilting rigidity through symmetrical bearing arrangement
- FKM seals for extended gearbox life
- Large motor input option to accept bigger diameter motor shafts so you don't use an oversized gearbox
- Error free motor mounting and quick changeover with toleranced pilot on motor plate
- Low no load running torque, giving you more torque for your application
- Magnetic oil filtration to remove contaminants to prevent breakdowns
- Build and ship in one day
- Assembled in the USA

STOBER PHQ Series Servo Precision Planetary Gearheads are designed for applications that demand torsional stiffness and tilting rigidity. The advanced lines can handle high accuracy machines. Every gearbox is made to order. STOBER will custom whatever you need to fit your application. Contact us today to learn more.

All PHQ Series SHIP in 1 Day!

NO EXPEDITE FEE FOR 24 HOUR SERVICE

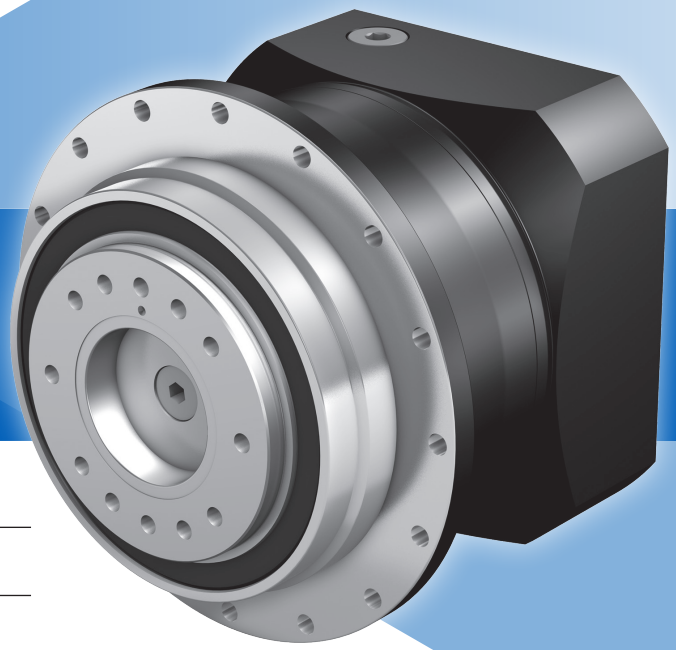

General Specifications

Ambient Temperature	0°C to +40°C (104°F) [Unit temperature <90°C Max]
Backlash	≤1 arcmins (see performance overview page 46)
Coating	Black (RAL-9005)
Degree of Protection	IP65
Direction of Rotation	Input and output rotate the SAME direction
Efficiency	1 stage 96%; 2 stage 93%; 3 stage 90%
Input RPM	Up to 8,000 RPM
Installation	Requires 12.9 fasteners. See page 288 for more information
Lubrication	Lubricated for life – standard Mobil SHC629; option food grade Mobil SHC CIBUS 150
Mounting Position	Unrestricted except PHQ three stage units, see page 47
Warranty	5 Year Limited (2 Years on normal wear items: bearings, seals, etc.)



Overview

Selection Options *At-a-Glance*

Using the **Selection Data** table later in this section, select the PH Series Gearhead with the appropriate performance and design options tailored to your motor choice and exact application requirements. Use the part number guide below as a reference to build a part number for the complete gearhead assembly.

Part Number Examples:

1	2	3	4	5	6	7	8	9	0	!
PHQ	4	3	1	S	F	S	S	0055	ME	L

	Design Option	Part Number Code	Description
1	**Series**	PHQ	Rotating flange output planetary
2	**Size**	4 5 7 8 9 10 11 12	8 sizes of gearhead
3	**Generation**	3 4	Sizes 3-8 Sizes 9-12
4	**# of Stages**	1 2 3	One stage Two stage Three stage
5	**Housing**	S	Standard
6	**Output**	F	Flange output
7	**Bearing**	S V	Standard Reinforced Bearing (PHQ4 and 5)
8	**Backlash**	S R	Standard Backlash (PHQ4-8 only) Reduced backlash (PHQ4-9 only)
9	**Ratio**	0055	Ratios range from 5.5:1 to 600:1 (0055=5.5:1; 0160=16:1; 1000=100:1, etc.)
0	**Motor Adapter**	ME MF MB	Motor Adapter with EasyAdapt coupling Motor Adapter with FlexiAdapt coupling (PHQ3-8) (Contact factory for this option) ServoStop motor adapter with brake (Contact factory for this option)
!	**Options**	L	Large Input

Options

ME Adapter Option

- MSS1 Seal – special input seal for longer life (For sizes PHQ5-8). Contact factory for this option.

Integrated Safety Brake

- ServoStop – provides dynamic braking during power failures or emergency stops in hazardous situations. Contact factory for this option.

Coating Option

- Available with multi-layer, industrial 316 stainless steel epoxy coating. Contact factory for this option.

Large Input

- Accommodates a larger diameter motor shaft without going to a larger size gearbox.

ATEX

- ATmosphere EXplosible – rated for explosive environments. Contact factory for this option and allow additional time for delivery.

Rack and Pinion Systems

- PHQ available with rack and pinion. Contact factory for this option.

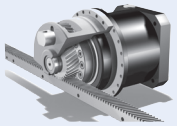

PHQ Performance Overview

PH Series performance is dependent on several factors including duty cycle, bearing design, gearhead size and stage configuration, among others. Use the chart below for preliminary evaluation, then use the following performance chart and selection information on the following pages for specific performance sizing and selection.

Size		4		5		7		
# of Stages		1	2	1	2	1	2	3
Acceleration Torque M_{2BMAX}	Nm	200		550		1050		
Output Torque Nom. [1] M_{2N}	Nm	130		320		680		
Torsional Stiffness C_2	Nm/arcmin	42		102		224		
Torsional Backlash [2]	Δϕ Δϕ Reduced	≤3 ≤1		≤3 ≤1		≤3 ≤1		
Input Speed Max. n_{1MAX}	Continuous Cyclic	3000 6000	4500 8000	2500 5000	4000 8000	2200 5000	3700 7000	4000 7000
Efficiency (@nom torque)	%	96	94	96	94	96	94	92
Weight	kg lbs	4.8 10.6	5.3 11.7	7.6 16.7	8.9 19.6	15.9 35	16.1 35.4	17.4 38.3
Noise [3]	dB(A)	≤55		≤56		≤57		
Performance by Bearing Design Option [4]								
Permitted Axial Force F_{2ax100}	N	2150		4150		6150		
Permitted Tilting Torque M_{2K100}	Nm	257		440		1466		
Tilting Stiffness C_{2K}	Nm/arcmin	192		429		500		
Performance by Reinforced Bearing Design Option – Choose V Option [4]								
Permitted Axial Force F_{2ax100}	N	2900		5000		—		
Permitted Tilting Torque M_{2K100}	Nm	354		572		—		
Tilting Stiffness C_{2K}	Nm/arcmin	217		478		—		

** PHQ cyclic speed is 5000*

[1] Ratings based on input speed (n_1) of 1500 RPM.

For torque at higher input speeds (M_{2NX}) solve the formula:

$$M_{2NX} = \frac{M_{2N}}{\sqrt[3]{\frac{n_1}{1500}}}$$

where n_1 = Actual Input Speed.

[2] Tested at 1.5% of nominal torque and recorded on the output side of the gearhead. For lower backlash, contact STOBER technical support.

[3] Measurement at one (1) meter distance with input speed (n_1) of 1500 RPM.

[4] Rating based on output speed (n_2) of 100 RPM. For values at other speeds see page <?>.

Overview



	8			9		10		11		12	
	1	2	3	2	3	2	3	2	3	2	3
	2800			6000		10,000		22,000		43,000	
	1700			4500		6500		13,000		25,000	
	713			1223		2072		3529		6277	
	≤3 ≤1			≤3 –		≤3 –		≤3 –		≤3 –	
	1500 4000	3000 6000	3700 6500	2800 4500	3300 6000	2500 4000	2800 4500	2300 3800	2800 4500	1700 3500	2500 4000
	96	94	92	94	92	94	92	94	92	94	92
	36.0 79.2	40.6 89.32	37.6 82.7	85.6 188.3	88.9 195.6	118.2 260	132.7 301.4	242.2 532.8	242.2 532.8	438.6 964.9	451.7 993.7
	≤57			≤58		≤59		≤59		≤60	
	10,050			33,000		50,000		60,000		70,000	
	3486			7500		8800		11,000		18,000	
	1550			7500		9500		11,500		14,000	
	–			–		–		–		–	
	–			–		–		–		–	
	–			–		–		–		–	

PHQ Series Three-Stage Mounting Position

For all three stage units (PHQ: Size 7-12) , the amount of lubrication depends on the mounting position.

When ordering any of these three stage units, the mounting position (EL1, EL5 or EL6) MUST BE SPECIFIED WITH THE ORDER!

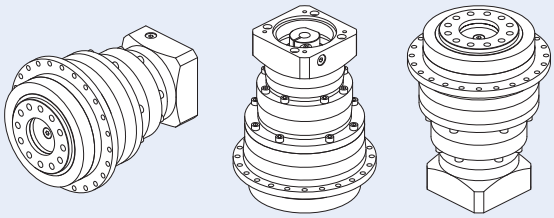

EL1 EL5 EL6

PHQ Series Motor Mounting Plate Option

(Motor information required with Motor Adapter ME option)

STOBER Servo Gearheads fit the motor of your choice with the appropriate motor mounting plate assembled between the motor and the gearhead.

NOTE: When ordering a gearhead:

- Specify the motor manufacturer and part number
- Provide the motor drawing with dimensions, or specify the motor mounting dimensions (per the list shown at right)

For a precise dimension on a specific motor, or for general assistance, we recommend you contact STOBER Technical Support.

Customer Required Dimensions for Properly Sized Motor Mounting Plate

d2 Motor Shaft Diameter
(If an adapter bushing is required it will be supplied with the motor plate.)

b6 Pilot Diameter

e6 Bolt Circle Diameter

s6 Bolt Diameter

l5 Motor Shaft Length

f6 Pilot Length

a6 Square Flange
(Optional – motor plate will typically be made to match this dimension.)

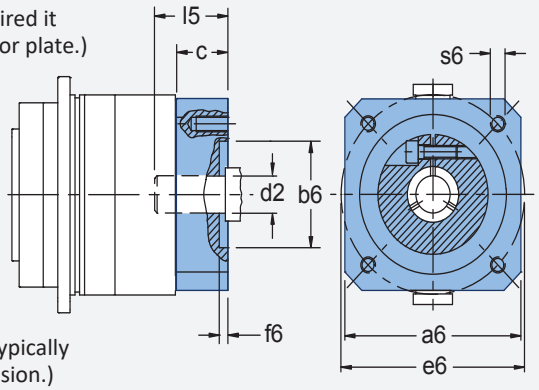

Motor Mounting Plate Dimensions — mm (Part Number Specific)

d2 Max. Motor Shaft Ø	c Min. Motor Plate Thickness*	Series / Size / # of Stages																		
			4		5		7			8			9		10		11		12	
			1	2	1	2	1	2	3	1	2	3	2	3	2	3	2	3	2	3
19	18	PHQ		432																
24	21	PHQ	431	432…L		532			733											
32	24	PHQ	431…L		531	532…L		732	733…L			833								
38	25	PHQ			531…L		731	732…L			832	833…L		943						
48	43	PHQ					731…L				832…L		942	943…L		1043		1143		
60 [1)]	43	PHQ											942…L		1042	1043…L	1142	1143…L	1242	1243

** Note that the c motor plate thickness is determined by the motor shaft length. The minimum motor plate thickness is the value listed.*
[1)] Maximum motor shaft diameter is 55 mm for PHQ932…L with ratios above 30:1 and for PHQ1033…L and PHQ1133…L with ratios above 150:1.

PHQ Series Permissible Motor Tilting Torque

The permissible tilting torque of the motor attached to the gear unit is a result of the static and dynamic load "F" from the motor weight, mass acceleration, and vibration multiplied by the distance from the center of gravity "l_S" of the motor.

M_{1K}	PHQ432_ME	PHQ431_ME PHQ532_ME PHQ733_ME	PHQ531_ME PHQ732_ME PHQ833_ME	PHQ731_ME PHQ832_ME PHQ933_ME	PHQ831_ME PHQ942_ME PHQ1043_ME PHQ1143_ME	PHQ1042_ME PHQ1243_ME	PHQ1142_ME	PHQ1242_ME
Nm	20	40	80	200	400	800	1200	1800

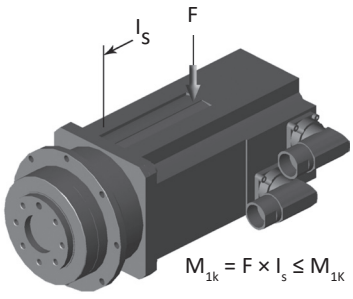



Overview

PHQ Series Permissible Output Shaft Load and Tilting Moments – Standard Bearings

Size	z_2 Distance of Shaft Shoulder to Center of Output Bearing mm	F_{2ax100} Permitted Axial Force N	$F_{2rad100}$ Permitted Radial Force ≤100RPM N	$F_{2rad,acc}$ Radial Acceleration Force N	M_{2K100} Permitted Tilting Torque ≤100RPM Nm	$M_{2K,acc}$ Permitted Acceleration Tilting Torque Nm	C_{2K} Tilting Stiffness Nm/arcmin
4	83.0	2150	3095	3929	257	326	192
5	97.0	4150	4536	4897	440	475	429
7	86.0	6150	17,045	17,045	1466	1466	500
8	125.5	10,050	27,778	33,333	3486	4183	1550
9	155.0	33,000	48,387	70,968	7,500	11,000	7500
10	171.0	50,000	51,462	73,099	8,800	12,500	9500
11	231.0	60,000	47,619	69,264	11,000	16,000	11,500
12	281.0	70,000	64,057	106,761	18,000	30,000	14,000

PHQ Series Permissible Output Shaft Load and Tilting Moments – Reinforced Bearings

Size	z_2 Distance of Shaft Shoulder to Center of Output Bearing mm	F_{2ax100} Permitted Axial Force N	$F_{2rad100}$ Permitted Radial Force ≤100RPM N	$F_{2rad,acc}$ Radial Acceleration Force N	M_{2K100} Permitted Tilting Torque ≤100RPM Nm	$M_{2K,acc}$ Permitted Acceleration Tilting Torque Nm	C_{2K} Tilting Stiffness Nm/arcmin
4	88.5	2900	4000	4000	354	354	217
5	104.0	5000	5500	5500	572	572	478

PHQ Series Load/Life/Speed Calculations

The permissible load and tilting moment values are based on an output speed of 100 RPM. For higher speeds the following applies, where n_2 is the desired speed:

$$F_{2AX} = \frac{F_{2ax100}}{\sqrt[3]{\frac{n_2}{100}}} \qquad F_{2radN} = \frac{F_{2rad100}}{\sqrt[3]{\frac{n_2}{100rpm}}} \qquad M_{2KX} = \frac{M_{2K100}}{\sqrt[3]{\frac{n_2}{100}}}$$

The application output tilting moment should be determined by the following formula:

$$M_{2k,acc*} = \frac{2 \bullet F_{2ax100*} \bullet y_2 + F_{2rad,acc*} \bullet (x_2 + Z_2)}{1000} \leq M_{2k,acc}$$

$$M_{2k,eq*} = \sqrt[3]{\frac{n_{2b1} \bullet t_{b1} \bullet M_{2kb1}{}^3 + \ldots + n_{2bn} \bullet t_{bn} \bullet M_{2kbn}{}^3}{n_{2b1} \bullet t_{b1} + \ldots + n_{2bn} \bullet t_{bn}}} \leq M_{2kN}$$

$$F_{2rad,eq*} = \sqrt[3]{\frac{n_{2b1} \bullet t_{b1} \bullet F_{2rb1}{}^3 + \ldots + n_{2bn} \bullet t_{bn} \bullet F_{2rbn}{}^3}{n_{2b1} \bullet t_{b1} + \ldots + n_{2bn} \bullet t_{bn}}} \leq F_{2radN}$$

Where:

z_2	Distance of Shaft Shoulder to Center of Output Bearing
n_2	Actual Average Output Speed
x_2	Distance of the Shaft Shoulder to the Force Application Point
y_2	Distance of the Shaft Axis to the Axial Force Application Point
F_{2ax*}	Actual Axial Force at Gear Unit Output
F_{2ax100}	Permitted Axial Force
$F_{2rad100}$	Permitted Radial Force ≤100RPM
$F_{2rad,acc}$	Radial Acceleration Force
$F_{2rad,acc*}$	Radial Acceleration Force at Gear Unit Output
M_{2K100}	Permitted Tilting Torque ≤100RPM
$M_{2K,acc}$	Permitted Acceleration Tilting Torque
$M_{2k,acc*}$	Permitted Acceleration Tilting Torque at Gear Unit Output
C_{2K}	Tilting Stiffness

All formulas shown are based on METRIC values

Upper case letters are permissible values. Lower case letters are for existing values.

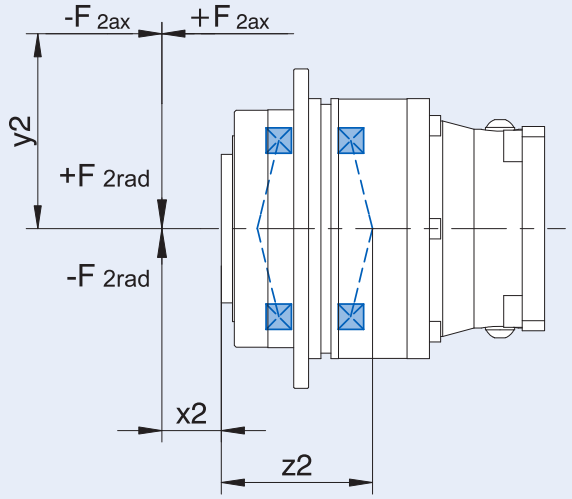

The hours of life (L_h) of the unit can be determined by the following formula:

bearing life for duty cycle ≤ 40%

L_h > 10,000 hours if M_{2K100}/M_{2A*} < 1.25 and > 1
L_h > 20,000 hours if M_{2K100}/M_{2A*} > 1.25 and > 1.5
L_h > 30,000 hours if M_{2K100}/M_{2A*} < 1.5

bearing life for duty cycle ≥ 40%

$$L_{hA} = L_h \left(\frac{40\%}{\text{Duty Cycle}} \right)$$

Exact Ratio (i)	Output Torque: Nom. [1] M_{2N}	Output Torque: Accel. M_{2acc}	Output Torque: Accel. Torque for Reduced Backlash M_{2accHT}	Output Torque: Peak [2] M_{2NOT}	Back-lash $\Delta\phi_2$	Red. Back-lash $\Delta\phi_{2red}$	Part Number* (Gearhead + Input)	Max. Input Speed RPM (n1): Cont.	Max. Input Speed RPM (n1): Cyclic	Motor Shaft [3] Max Ø d_{MW}	Input Inertia J_1	Tors. Stiffness C_2	Oper. Noise L_{pA}
	Nm	Nm	Nm	Nm	arcmin	arcmin				mm	kgcm²	Nm/ arcmin	dB(A)
PHQ4													
5.500	100	200	220	385	3	1	PHQ431_0055 ME	3000	6000	≤24	1.1	42	59
				400			PHQ431_0055 MEL			≤32	2.7		
22.00	120	200	238	400	3	1	PHQ432_0220 ME	4000	8000	≤19	0.51	40	60
							PHQ432_0220 MEL			≤24	0.94		
27.50	120	200	246	400	3	1	PHQ432_0280 ME	4500	8000	≤19	0.46	40	58
							PHQ432_0280 MEL			≤24	0.89		
38.50	130	200	246	400	3	1	PHQ432_0390 ME	4500	8000	≤19	0.43	40	57
							PHQ432_0390 MEL			≤24	0.86		
55.00	130	200	247	400	3	1	PHQ432_0550 ME	4500	8000	≤19	0.41	38	55
							PHQ432_0550 MEL			≤24	0.84		

[1] *Based on input speed of 1500 RPM. See page 46 for details on torque calculations.*
[2] *Maximum momentary torque for emergency stops or heavy shock load. (Admissible stops per life of gearhead = 1,000 stops maximum.)*
[3] *For additional motor shaft sizes or smaller inertia value, please visit configurator.stober.com*
* *ME= Motor Adapter L=Large Input Option*



Selection Data

Exact Ratio (i)	Output Torque: Nom. M_{2N} Nm	Output Torque: Accel. M_{2acc} Nm	Output Torque: Accel. Torque for Reduced Backlash M_{2accHT} Nm	Output Torque: Peak M_{2NOT} Nm	Back-lash $\Delta\phi_2$ arcmin	Red. Back-lash $\Delta\phi_{2red}$ arcmin	Part Number* (Gearhead + Input)	Max. Input Speed RPM (n1): Cont.	Max. Input Speed RPM (n1): Cyclic	Motor Shaft Max Ø d_{MW} mm	Input Inertia J_1 kgcm²	Tors. Stiffness C_2 Nm/arcmin	Oper. Noise L_{pA} dB(A)
PHQ5													
5.500	280	550	550	948	3	1	PHQ531_0055 ME	2500	5000	≤32	3.3	101	60
							PHQ531_0055 MEL			≤38	6.9	102	
22.00	290	480	530	948	3	1	PHQ532_0220 ME	3500	7000	≤24	1.1	102	61
							PHQ532_0220 MEL			≤32	2.7		
27.50	300	540	562	948	3	1	PHQ532_0280 ME	3700	7500	≤24	1.0	102	59
							PHQ532_0280 MEL			≤32	2.6		
38.50	320	530	552	948	3	1	PHQ532_0390 ME	4000	8000	≤24	0.94	100	58
							PHQ532_0390 MEL			≤32	2.5		
55.00	320	500	500	948	3	1	PHQ532_0550 ME	4000	8000	≤24	0.89	95	56
							PHQ532_0550 MEL			≤32	2.5		

[1] *Based on input speed of 1500 RPM. See page 46 for details on torque calculations.*
[2] *Maximum momentary torque for emergency stops or heavy shock load. (Admissible stops per life of gearhead = 1,000 stops maximum.)*
[3] *For additional motor shaft sizes or smaller inertia value, please visit configurator.stober.com*
* *ME= Motor Adapter L=Large Input Option*

Exact Ratio (i)	Output Torque: Nom. [1] M_{2N} Nm	Output Torque: Accel. M_{2acc} Nm	Output Torque: Accel. Torque for Reduced Backlash M_{2accHT} Nm	Output Torque: Peak [2] M_{2NOT} Nm	Back-lash $\Delta\phi_2$ arcmin	Red. Back-lash $\Delta\phi_{2red}$ arcmin	Part Number* (Gearhead + Input)	Max. Input Speed RPM (n1): Cont.	Max. Input Speed RPM (n1): Cyclic	Motor Shaft [3] Max Ø d_{MW} mm	Input Inertia J_1 kgcm²	Tors. Stiffness C_2 Nm/arcmin	Oper. Noise L_{pA} dB(A)
PHQ7													
5.500	500	1050	1050	1816	3	1	PHQ731_0055 ME	2200	5000	≤38	8.9	216	61
				2100			PHQ731_0055 MEL			≤48	19	222	
22.00	650	900	1000	1800	3	1	PHQ732_0220 ME	3000	6000	≤32	3.6	224	62
							PHQ732_0220 MEL			≤38	7.2		
27.50	650	1050	1050	2100	3	1	PHQ732_0280 ME	3500	7000	≤32	3.3	223	60
							PHQ732_0280 MEL			≤38	6.8		
38.50	680	1050	1050	2100	3	1	PHQ732_0390 ME	3700	7000	≤32	2.9	220	59
							PHQ732_0390 MEL			≤38	6.4		
55.00	680	1050	1050	2100	3	1	PHQ732_0550 ME	3700	7000	≤32	2.7	213	57
							PHQ732_0550 MEL			≤38	6.2		
88.00	680	1050	1050	2100	3	1	PHQ733_0880 ME	3300	6000	≤24	1.2	224	61
							PHQ733_0880 MEL			≤32	2.8		
110.0	680	1050	1050	2100	3	1	PHQ733_1100 ME	3300	6000	≤24	1.1	224	61
							PHQ733_1100 MEL			≤32	2.7		
137.5	680	1050	1050	2100	3	1	PHQ733_1380 ME	3700	6500	≤24	1.0	224	59
							PHQ733_1380 MEL			≤32	2.6		
154.0	680	1050	1050	2100	3	1	PHQ733_1540 ME	4000	7000	≤24	0.95	223	58
							PHQ733_1540 MEL			≤32	2.6		
192.5	680	1050	1050	2100	3	1	PHQ733_1930 ME	4000	7000	≤24	0.94	223	58
							PHQ733_1930 MEL			≤32	2.5		
220.0	680	1050	1050	2100	3	1	PHQ733_2200 ME	4000	7000	≤24	0.89	222	56
							PHQ733_2200 MEL			≤32	2.5		
275.0	680	1050	1050	2100	3	1	PHQ733_2750 ME	4000	7000	≤24	0.89	222	56
							PHQ733_2750 MEL			≤32	2.5		
385.0	680	1050	1050	2100	3	1	PHQ733_3850 ME	4000	7000	≤24	0.88	221	56
							PHQ733_3850 MEL			≤32	2.5		
550.0	680	1050	1050	2100	3	1	PHQ733_5500 ME	4000	7000	≤24	0.88	214	56
							PHQ733_5500 MEL			≤32	2.5		

[1] *Based on input speed of 1500 RPM. See page 46 for details on torque calculations.*
[2] *Maximum momentary torque for emergency stops or heavy shock load. (Admissible stops per life of gearhead = 1,000 stops maximum.)*
[3] *For additional motor shaft sizes or smaller inertia value, please visit configurator.stober.com*
* *ME= Motor Adapter L=Large Input Option*



Exact Ratio (i)	Output Torque: Nom. [1] M_{2N} Nm	Output Torque: Accel. M_{2acc} Nm	Output Torque: Accel. Torque for Reduced Backlash M_{2accHT} Nm	Output Torque: Peak [2] M_{2NOT} Nm	Back-lash $\Delta\phi_2$ arcmin	Red. Back-lash $\Delta\phi_{2red}$ arcmin	Part Number* (Gearhead + Input)	Max. Input Speed RPM (n1): Cont.	Max. Input Speed RPM (n1): Cyclic	Motor Shaft [3] Max Ø d_{MW} mm	Input Inertia J_1 kgcm²	Tors. Stiffness C_2 Nm/arcmin	Oper. Noise L_{pA} dB(A)
PHQ8													
5.500	1400	2800	3300	3311	3	1	PHQ831_0055 ME	1500	4000	≤48	31	621	62
				4964			PHQ831_0055 MEL			≤60	59	652	
22.00	1700	2800	3300	4964	3	1	PHQ832_0220 ME	2500	4500	≤38	11	709	63
							PHQ832_0220 MEL			≤48	21	713	
27.50	1700	2800	3300	4964	3	1	PHQ832_0280 ME	2700	5500	≤38	8.9	707	61
							PHQ832_0280 MEL			≤48	19	710	
38.50	1700	2800	3300	4964	3	1	PHQ832_0390 ME	3000	6000	≤38	7.7	697	60
							PHQ832_0390 MEL			≤48	18	698	
55.00	1700	2700	2990	4964	3	1	PHQ832_0550 ME	3000	6000	≤38	7.0	669	58
							PHQ832_0550 MEL			≤48	17		
88.00	1700	2800	3300	4964	3	1	PHQ833_0880 ME	3000	5000	≤32	3.7	711	62
							PHQ833_0880 MEL			≤38	7.3		
110.0	1700	2800	3300	4964	3	1	PHQ833_1100 ME	3000	5000	≤32	3.6	711	62
							PHQ833_1100 MEL			≤38	7.2		
137.5	1700	2800	3300	4964	3	1	PHQ833_1380 ME	3500	6000	≤32	3.3	710	60
							PHQ833_1380 MEL			≤38	6.8		
154.0	1700	2800	3300	4964	3	1	PHQ833_1540 ME	3700	6500	≤32	3.0	709	59
							PHQ833_1540 MEL			≤38	6.5		
192.5	1700	2800	3300	4964	3	1	PHQ833_1930 ME	3700	6500	≤32	2.9	709	59
							PHQ833_1930 MEL			≤38	6.4		
220.0	1700	2800	3300	4964	3	1	PHQ833_2200 ME	3700	6500	≤32	2.7	705	57
							PHQ833_2200 MEL			≤38	6.2		
275.0	1700	2800	3300	4964	3	1	PHQ833_2750 ME	3700	6500	≤32	2.7	707	57
							PHQ833_2750 MEL			≤38	6.2		
385.0	1700	2800	3300	4964	3	1	PHQ833_3850 ME	3700	6500	≤32	2.7	698	57
							PHQ833_3850 MEL			≤38	6.2		
550.0	1700	2700	2990	4964	3	1	PHQ833_5500 ME	3700	6500	≤32	2.7	672	57
							PHQ833_5500 MEL			≤38	6.2		

[1] *Based on input speed of 1500 RPM. See page 46 for details on torque calculations.*
[2] *Maximum momentary torque for emergency stops or heavy shock load. (Admissible stops per life of gearhead = 1,000 stops maximum.)*
[3] *For additional motor shaft sizes or smaller inertia value, please visit configurator.stober.com*
* *ME= Motor Adapter L=Large Input Option*

Exact Ratio (i)	Output Torque: Nom. [1] M_{2N}	Output Torque: Accel. M_{2acc}	Output Torque: Accel. Torque for Reduced Backlash M_{2accHT}	Output Torque: Peak [2] M_{2NOT}	Back-lash $\Delta\phi_2$	Red. Back-lash $\Delta\phi_{2red}$	Part Number* (Gearhead + Input)	Max. Input Speed RPM (n1): Cont.	Max. Input Speed RPM (n1): Cyclic	Motor Shaft [3] Max Ø d_{MW}	Input Inertia J_1	Tors. Stiffness C_2	Oper. Noise L_{pA}
	Nm	Nm	Nm	Nm	arcmin	arcmin				mm	kgcm²	Nm/ arcmin	dB(A)
PHQ9													
18.00	3800	6000	6000	10496	3.0	1.0	PHQ942_0180 ME	1800	3000	≤48	62	1212	66
				12000			PHQ942_0180 MEL			≤60	90	1223	
24.00	3800	6600	6600	13200	3.0	1.0	PHQ942_0240 ME	2000	3500	≤48	37	1211	64
							PHQ942_0240 MEL			≤60	65	1217	
30.00	4200	6600	6600	13200	3.0	1.0	PHQ942_0300 ME	2500	4000	≤48	29	1205	62
							PHQ942_0300 MEL			≤60	57	1209	
42.00	4500	6600	6600	13200	3.0	1.0	PHQ942_0420 ME	2800	4500	≤48	23	1190	61
							PHQ942_0420 MEL			≤60	52	1192	
60.00	4500	6600	6600	13200	3.0	1.0	PHQ942_0600 ME	2800	4500	≤48	20	1147	59
							PHQ942_0600 MEL			≤60	49	1148	
72.00	3800	6600	6600	13200	3.0	1.0	PHQ943_0720 ME	2200	4500	≤38	13	1202	63
							PHQ943_0720 MEL			≤48	23	1203	
96.00	3800	6600	6600	13200	3.0	1.0	PHQ943_0960 ME	2500	4500	≤38	11	1205	63
							PHQ943_0960 MEL			≤48	21	1206	
120.0	4200	6600	6600	13200	3.0	1.0	PHQ943_1200 ME	2500	4500	≤38	10	1201	63
							PHQ943_1200 MEL			≤48	21	1202	
150.0	4200	6600	6600	13200	3.0	1.0	PHQ943_1500 ME	2700	5500	≤38	8.8	1201	61
							PHQ943_1500 MEL			≤48	19		
168.0	3800	6600	6600	13200	3.0	1.0	PHQ943_1680 ME	3000	6000	≤38	7.8	1203	60
							PHQ943_1680 MEL			≤48	18		
210.0	4200	6600	6600	13200	3.0	1.0	PHQ943_2100 ME	3000	6000	≤38	7.6	1200	60
							PHQ943_2100 MEL			≤48	18		
240.0	3800	6600	6600	13200	3.0	1.0	PHQ943_2400 ME	3000	6000	≤38	7.1	1197	58
							PHQ943_2400 MEL			≤48	17		
300.0	4200	6600	6600	13200	3.0	1.0	PHQ943_3000 ME	3000	6000	≤38	7.0	1196	58
							PHQ943_3000 MEL			≤48	17		
420.0	4500	6600	6600	13200	3.0	1.0	PHQ943_4200 ME	3000	6000	≤38	6.9	1184	58
							PHQ943_4200 MEL			≤48	17		
600.0	4500	6600	6600	13200	3.0	1.0	PHQ943_6000 ME	3000	6000	≤38	6.9	1145	58
							PHQ943_6000 MEL			≤48	17		

[1] *Based on input speed of 1500 RPM. See page 46 for details on torque calculations.*
[2] *Maximum momentary torque for emergency stops or heavy shock load. (Admissible stops per life of gearhead = 1,000 stops maximum.)*
[3] *For additional motor shaft sizes or smaller inertia value, please visit configurator.stober.com*
* *ME= Motor Adapter L=Large Input Option*



Exact Ratio (i)	Output Torque: Nom. [1] M_{2N} Nm	Output Torque: Accel. M_{2acc} Nm	Output Torque: Accel. Torque for Reduced Backlash M_{2accHT} Nm	Output Torque: Peak [2] M_{2NOT} Nm	Back-lash $\Delta\phi_2$ arcmin	Red. Back-lash $\Delta\phi_{2red}$ arcmin	Part Number* (Gearhead + Input)	Max. Input Speed RPM (n1): Cont.	Max. Input Speed RPM (n1): Cyclic	Motor Shaft [3] Max Ø d_{MW} mm	Input Inertia J_1 kgcm²	Tors. Stiffness C_2 Nm/arcmin	Oper. Noise L_{pA} dB(A)
PHQ10													
24.00	6500	10000	–	20000	3.0	–	PHQ1042_0240 ME	1800	3000	≤60	100	2072	65
30.00	6500	10000	–	20000	3.0	–	PHQ1042_0300 ME	2000	3500	≤60	82	2064	63
42.00	6500	10000	–	20000	3.0	–	PHQ1042_0420 ME	2300	4000	≤60	69	2043	62
60.00	6500	10000	–	20000	3.0	–	PHQ1042_0600 ME	2500	4000	≤60	62	1972	60
96.00	6500	10000	–	20000	3.0	–	PHQ1043_0960 ME	2000	3500	≤48	36	2066	64
							PHQ1043_0960 MEL			≤60	65	2067	
120.0	6500	10000	–	20000	3.0	–	PHQ1043_1200 ME	2000	3500	≤48	35	2060	64
							PHQ1043_1200 MEL			≤60	64	2061	
150.0	6500	10000	–	20000	3.0	–	PHQ1043_1500 ME	2500	4000	≤48	28	2060	62
							PHQ1043_1500 MEL			≤60	56		
168.0	6500	10000	–	20000	3.0	–	PHQ1043_1680 ME	2800	4500	≤48	23	2063	61
							PHQ1043_1680 MEL			≤60	51		
210.0	6500	10000	–	20000	3.0	–	PHQ1043_2100 ME	2800	4500	≤48	23	2059	61
							PHQ1043_2100 MEL			≤60	51		
240.0	6500	10000	–	20000	3.0	–	PHQ1043_2400 ME	2800	4500	≤48	20	2055	59
							PHQ1043_2400 MEL			≤60	48		
300.0	6500	10000	–	20000	3.0	–	PHQ1043_3000 ME	2800	4500	≤48	20	2054	59
							PHQ1043_3000 MEL			≤60	48		
420.0	6500	10000	–	20000	3.0	–	PHQ1043_4200 ME	2800	4500	≤48	20	2036	62
							PHQ1043_4200 MEL			≤60	48		
600.0	6500	10000	–	20000	3.0	–	PHQ1043_6000 ME	2800	4500	≤48	20	1969	59
							PHQ1043_6000 MEL			≤60	48		

[1] *Based on input speed of 1500 RPM. See page 46 for details on torque calculations.*
[2] *Maximum momentary torque for emergency stops or heavy shock load. (Admissible stops per life of gearhead = 1,000 stops maximum.)*
[3] *For additional motor shaft sizes or smaller inertia value, please visit configurator.stober.com*
* *ME= Motor Adapter L=Large Input Option*

Exact Ratio (i)	Output Torque: Nom. [1] M_{2N}	Output Torque: Accel. M_{2acc}	Output Torque: Accel. Torque for Reduced Backlash M_{2accHT}	Output Torque: Peak [2] M_{2NOT}	Back-lash $\Delta\phi_2$	Red. Back-lash $\Delta\phi_{2red}$	Part Number* (Gearhead + Input)	Max. Input Speed RPM (n1)		Motor Shaft [3] Max Ø d_{MW}	Input Inertia J_1	Tors. Stiffness C_2	Oper. Noise L_{pA}
	Nm	Nm	Nm	Nm	arcmin	arcmin		Cont.	Cyclic	mm	kgcm²	Nm/ arcmin	dB(A)
PHQ11													
24.00	13000	22000	–	32208	3.0	–	**PHQ1142_0240 ME**	1800	2800	≤60	171	3533	68
30.00	13000	22000	–	40000	3.0	–	**PHQ1142_0300 ME**	2000	3300	≤60	126	3538	66
42.00	13000	22000	–	40000	3.0	–	**PHQ1142_0420 ME**	2300	3800	≤60	92	3515	65
60.00	13000	22000	–	40000	3.0	–	**PHQ1142_0600 ME**	2300	3800	≤60	73	3460	63
96.00	13000	22,000	–	40,000	3.0	–	**PHQ1143_0960 ME**	2000	3500	≤48	43	3526	64
							PHQ1143_0960 MEL			≤60	71	3529	
120.0	13000	22,000	–	40,000	3.0	–	**PHQ1143_1200 ME**	2000	3500	≤48	40	3509	62
							PHQ1143_1200 MEL			≤60	68	3511	
150.0	13000	22,000	–	40,000	3.0	–	**PHQ1143_1500 ME**	2500	4000	≤48	31	3508	62
							PHQ1143_1500 MEL			≤60	59	3509	
168.0	13000	22,000	–	40,000	3.0	–	**PHQ1143_1680 ME**	2800	4500	≤48	25	3518	61
							PHQ1143_1680 MEL			≤60	53	3519	
210.0	13000	22,000	–	40,000	3.0	–	**PHQ1143_2100 ME**	2800	4500	≤48	24	3504	61
							PHQ1143_2100 MEL			≤60	52	3505	
240.0	13000	22,000	–	40,000	3.0	–	**PHQ1143_2400 ME**	2800	4500	≤48	21	3494	59
							PHQ1143_2400 MEL			≤60	49	3494	
300.0	13000	22,000	–	40,000	3.0	–	**PHQ1143_3000 ME**	2800	4500	≤48	21	3489	59
							PHQ1143_3000 MEL			≤60	49	3490	

[1] *Based on input speed of 1500 RPM. See page 46 for details on torque calculations.*
[2] *Maximum momentary torque for emergency stops or heavy shock load. (Admissible stops per life of gearhead = 1,000 stops maximum.)*
[3] *For additional motor shaft sizes or smaller inertia value, please visit configurator.stober.com*
* *ME= Motor Adapter L=Large Input Option*



Exact Ratio (i)	Output Torque: Nom. [1] M_{2N} Nm	Output Torque: Accel. M_{2acc} Nm	Output Torque: Accel. Torque for Reduced Backlash M_{2accHT} Nm	Output Torque: Peak [2] M_{2NOT} Nm	Backlash $\Delta\phi_2$ arcmin	Red. Backlash $\Delta\phi_{2red}$ arcmin	Part Number* (Gearhead + Input)	Max. Input Speed RPM (n1): Cont.	Max. Input Speed RPM (n1): Cyclic	Motor Shaft [3] Max Ø d_{MW} mm	Input Inertia J_1 kgcm²	Tors. Stiffness C_2 Nm/arcmin	Oper. Noise L_{pA} dB(A)
PHQ12													
24.00	25000	43000	–	53836	3.0	–	PHQ1242_0240 ME	1200	3000	≤60	584	6248	72
42.00	25000	43000	–	80000	3.0	–	PHQ1242_0420 ME	1700	3500	≤60	388	6236	69
96.00	25000	43000	–	80000	3.0	–	PHQ1243_0960 ME	1800	3000	≤60	113	6277	65
120.0	25000	43000	–	80000	3.0	–	PHQ1243_1200 ME	2000	3500	≤60	91	6272	63
168.0	25000	43000	–	80000	3.0	–	PHQ1243_1680 ME	2300	4000	≤60	74	6260	62
210.0	25000	43000	–	80000	3.0	–	PHQ1243_2100 ME	2000	3500	≤60	83	6154	63
240.0	25000	43000	–	80000	3.0	–	PHQ1243_2400 ME	2500	4000	≤60	64	6217	60
294.0	25000	43000	–	80000	3.0	–	PHQ1243_2940 ME	2300	4000	≤60	70	6150	62
420.0	25000	43000	–	80000	3.0	–	PHQ1243_4200 ME	2500	4000	≤60	62	6136	60

[1] Based on input speed of 1500 RPM. See page 46 for details on torque calculations.
[2] Maximum momentary torque for emergency stops or heavy shock load. (Admissible stops per life of gearhead = 1,000 stops maximum.)
[3] For additional motor shaft sizes or smaller inertia value, please visit configurator.stober.com
** ME= Motor Adapter L=Large Input Option*

PHQ Standard Input

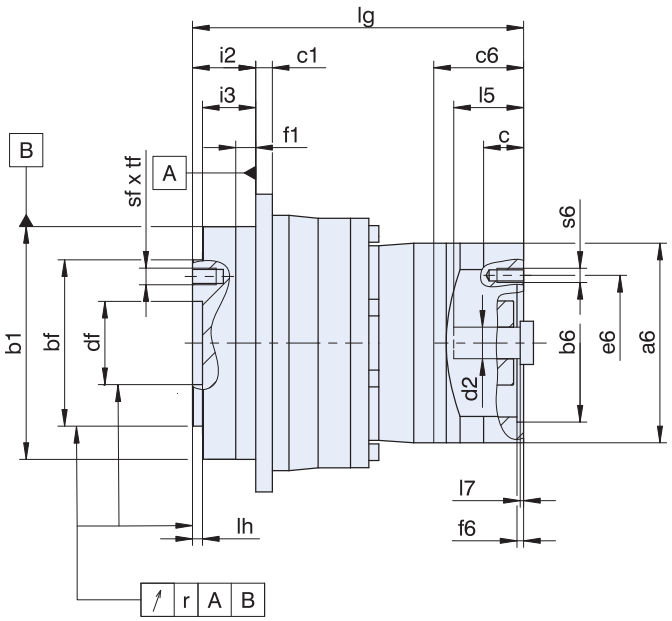

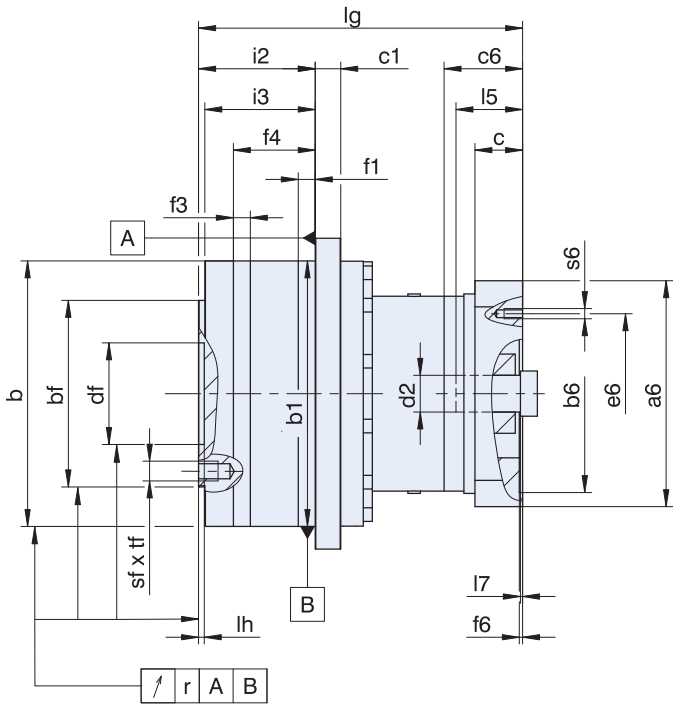

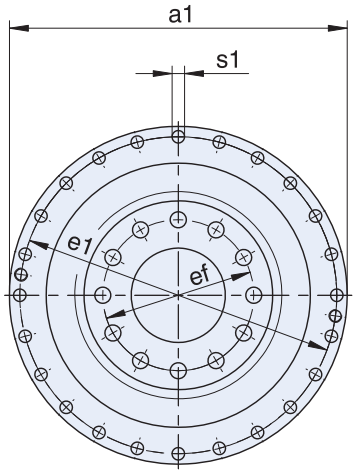

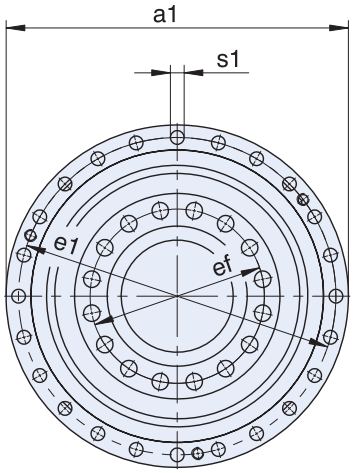

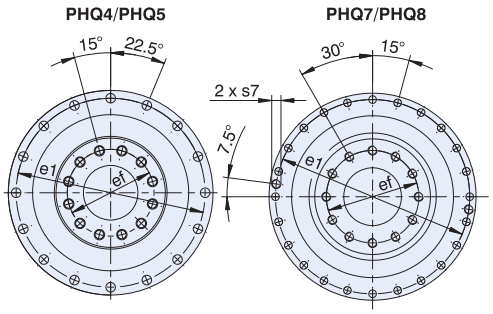

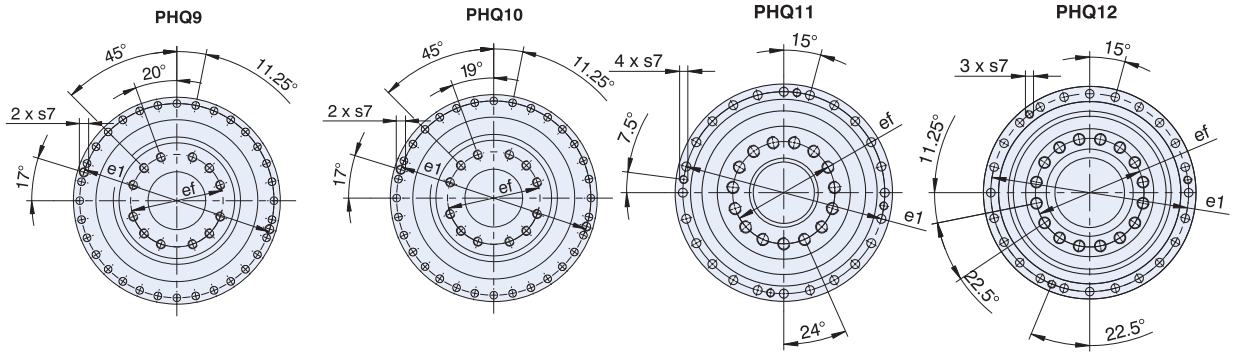



Dimensional Data

Table 1 Dimensions (mm)

Unit	Øa1	Øb1	Øbf	c1	Ødf	Øe1	Øef	f1	i2	i3	lh	r	Øs1	s7	sf	f
PHQ431	118^{h7}	90^{h7}	63^{h7}	7	31.5^{H6}	109	50	10	30	24	6	0.020	5.5	–	M6	11
PHQ432	118^{h7}	90^{h7}	63^{h7}	7	31.5^{H6}	109	50	10	30	24	6	0.020	5.5	–	M6	11
PHQ531	145^{h7}	110^{h7}	80^{h7}	8	40.0^{H6}	135	63	12	29	23	6	0.020	5.5	–	M8	12
PHQ532	145^{h7}	110^{h7}	80^{h7}	8	40.0^{H6}	135	63	12	29	23	6	0.020	5.5	–	M8	12
PHQ731	179^{h7}	140^{h7}	100^{h7}	10	50.0^{H6}	168	80	12	38	32	6	0.025	6.6	–	M10	16
PHQ732	179^{h7}	140^{h7}	100^{h7}	10	50.0^{H6}	168	80	12	38	32	6	0.025	6.6	–	M10	16
PHQ733	179^{h7}	140^{h7}	100^{h7}	10	50.0^{H6}	168	80	12	38	32	6	0.025	6.6	–	M10	16
PHQ831	247^{h7}	200^{h7}	160^{h7}	12	80.0^{H6}	233	125	15	50	42	8	0.030	9.0	M10	M12	17
PHQ832	247^{h7}	200^{h7}	160^{h7}	12	80.0^{H6}	233	125	15	50	42	8	0.030	9.0	M10	M12	17
PHQ833	247^{h7}	200^{h7}	160^{h7}	12	80.0^{H6}	233	125	15	50	42	8	0.030	9.0	M10	M12	17
PHQ942	300^{h7}	255^{h7}	180^{h7}	18	90.0^{H6}	280	145	20	66	55	12	0.030	13.5	M8	M20	28
PHQ943	300^{h7}	255^{h7}	180^{h7}	18	90.0^{H6}	280	145	20	66	55	12	0.030	13.5	M8	M20	28
PHQ1042	330^{h7}	285^{h7}	200^{h7}	20	95.0^{H6}	310	166	20	75	60	10	0.040	13.5	M10	M24	35
PHQ1043	330^{h7}	285^{h7}	200^{h7}	20	95.0^{H6}	310	166	20	75	60	10	0.040	13.5	M10	M24	35

Table 2 Dimensions (mm)

Unit	Øb6	Øe6	Ød2max	l5	□a6	c	c6	f6	l7	lg	s6
PHQ431_ME	95	115	24	41	100	21.0	42.5	4.0	3.5	113.5	M8
PHQ432_ME	60	75	19	41	75	18.0	41.5	3.5	4.0	150.5	M5
PHQ531_ME	110	130	32	51	120	24.0	54.0	4.0	4.5	132.0	M8
PHQ532_ME	95	115	24	41	100	21.0	42.5	4.0	3.5	161.0	M8
PHQ731_ME	130	165	38	61	150	26.0	66.0	5.5	4.5	161.0	M10
PHQ732_ME	110	130	32	51	120	24.0	54.0	4.0	4.5	199.0	M8
PHQ733_ME	95	115	24	41	100	21.0	42.5	4.0	3.5	228.0	M8
PHQ831_ME	180	215	48	83	204	35.0	80.5	5.5	8.5	218.0	M12
PHQ832_ME	130	165	38	61	150	26.0	66.0	5.5	4.5	263.0	M10
PHQ833_ME	110	130	32	51	120	24.0	54.0	4.0	4.5	301.0	M8
PHQ942_ME	180	215	48	83	204	35.0	80.5	5.5	8.5	334.5	M12
PHQ943_ME	130	165	38	61	150	26.0	66.0	5.5	4.5	379.5	M10
PHQ1042_ME	180	215	60	85	230	43.0	91.5	6.0	10.5	376.5	M12
PHQ1043_ME	180	215	48	83	204	35.0	80.5	5.5	8.5	457.5	M12

In the table above, you will find example dimensions for the motor connection for the ME motor adapter. Note that when dimension c is lengthened (depending on the motor used), dimensions c6, l5 and lg are also lengthened accordingly. You will find additional motor connection dimensions for motor adapters ME, MEL, MF and MFL in our STOBER Configurator at http://configurator.stober.com. Here, you can directly download a 3D model of your drive.

** See Motor Mounting Plate Option, see page 48 for details.*

PHQ Standard Input

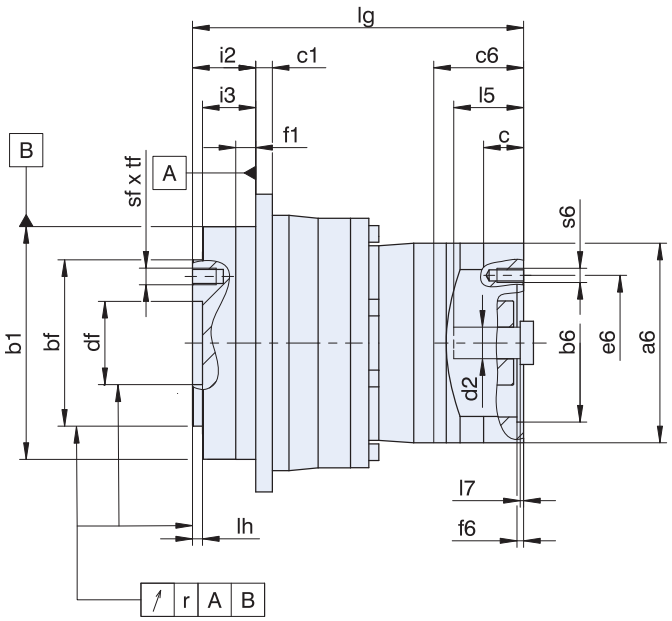

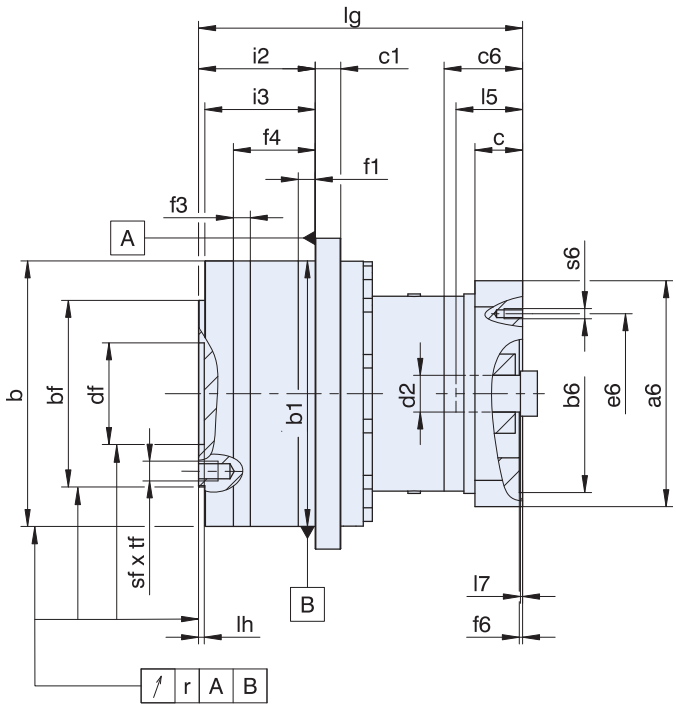

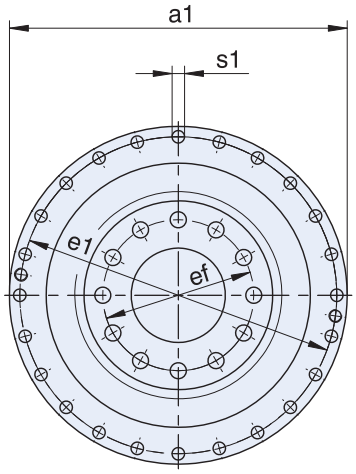

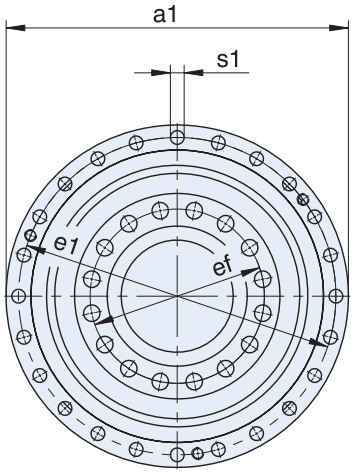

** See Motor Mounting Plate Option, see page 48 for details.*

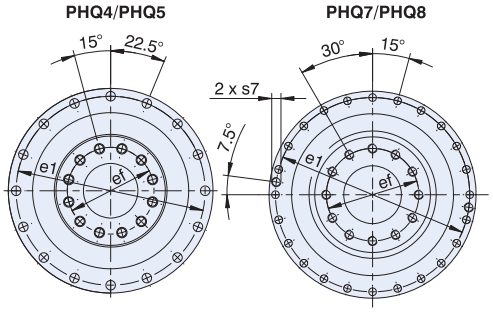

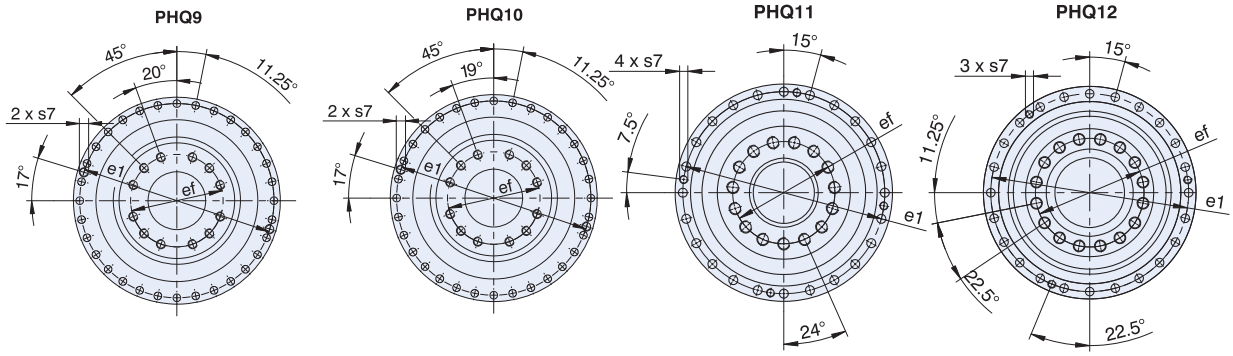



Dimensional Data

Table 1 Dimensions (mm)

Unit	Øa1	Øb	Øb1	Øbf	c1	Ødf	Øe1	Øef	f1	f3	f4	i2	i3	lh	r	s1	s7	sf	tf
PHQ1142	425	365^{g6}	365^{h6}	260^{h7}	32	120.0^{H6}	395	200	30	30	120	190	180	10	0.04	17.5	M16	M24	35.5
PHQ1143	425	365^{g6}	365^{h6}	260^{h7}	32	120.0^{H6}	395	200	30	30	120	190	180	10	0.04	17.5	M16	M24	35.5
PHQ1242	550	470^{g6}	470^{h6}	330^{h7}	45	180.0^{H7}	510	280	30	30	145	206.5	195.5	10	0.04	22	M16	M30	48
PHQ1243	550	470^{g6}	470^{h6}	330^{h7}	45	180.0^{H7}	510	280	30	30	145	206.5	195.5	10	0.04	22	M16	M30	48

Table 2 Dimensions (mm)

Unit	Øb6	Øe6	Ød2max	l5	□a6	c	c6	f6	l7	lg	s6
PHQ1142_ME	250^{H7}	300	60	110	315	72.0	131.0	6.0	15.0	473.0	M16
PHQ1143_ME	180^{H7}	215	48	83	204	35.0	80.5	5.5	8.5	528.0	M12
PHQ1242_ME	300^{H7}	350	60	141	355	84.5	139.0	6.0	15.0	573.5	M16
PHQ1243_ME	180^{H7}	215	60	85	230	43.0	91.5	6.0	10.5	643.0	M12

In the table above, you will find example dimensions for the motor connection for the ME motor adapter. Note that when dimension c is lengthened (depending on the motor used), dimensions c6, l5 and lg are also lengthened accordingly. You will find additional motor connection dimensions for motor adapters ME, MEL, MF and MFL in our STO- BER Configurator at http://configurator.stoeber.de. Here, you can directly download a 3D model of your drive.

PE Series: INLINE — Shaft Output

PE Features

- 3:1 to 100:1 ratios
- Helical gearing produces more torque while running quieter compared to spur tooth gearing
- Input coupling design transfers more torque with lower inertia for vibration free operation
- Large motor input option to accept bigger diameter motor shafts so you don't use an oversized gearbox
- Error free motor mounting and quick changeover with toleranced pilot on motor plate
- Low no load running torque, giving you more torque for your application
- Optional food grade grease (Contact STOBER.)
- Build and ship in one day
- Assembled in the USA

STOBER PE Series Servo Precision Planetary Gearheads are available for applications where very low backlash is not important. They are an economical helical tooth planetary, comparable in quality to other STOBER units. Every gearbox is made to order. STOBER will custom whatever you need to fit your application. Contact us today to learn more

SHIPS in 1 DAY!
NO EXPEDITE FEE FOR 24 HOUR SERVICE

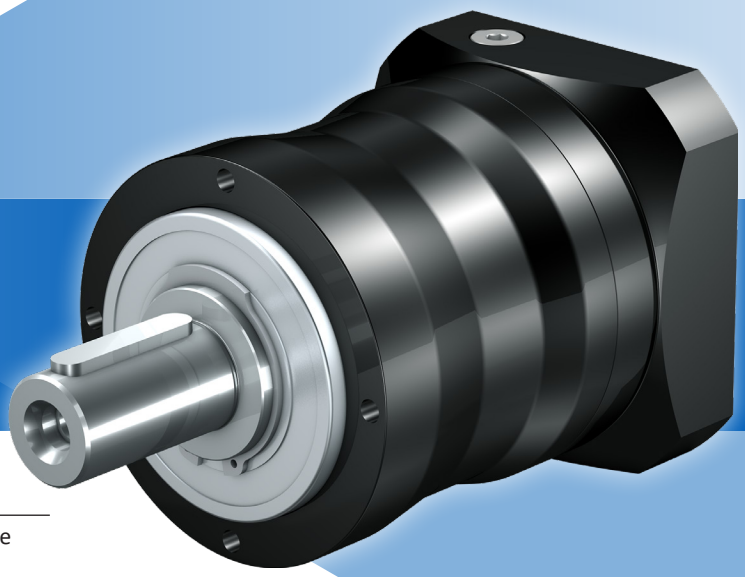

General Specifications

Ambient Temperature	0°C to +40°C (104°F) [Unit temperature <90°C Max]
Backlash	≤8 arcmins, see performance overview chart page
Coating	Black (RAL-9005)
Degree of Protection	IP64
Direction of Rotation	Input and output rotate the SAME direction
Efficiency	1 stage 97%; 2 stage 95%
Input RPM	Up to 8,000 RPM
Installation	Requires 10.9 fasteners. See page 288 for more information
Grease	Synthetic grease (NLGI 2)/ Food grease - lubricated for life
Mounting Position	Unrestricted
Warranty	5 Year Limited (2 Years on normal wear items: bearings, seals, etc.)

Options

Large Input (MEL)

- Accommodates a larger diameter motor shaft without going to a larger size gearbox.

Coating Option

- Available with multi-layer, industrial 316 stainless steel epoxy coating. Contact factory for this option.

Overview



Selection Options *At-a-Glance*

Using the **Selection Data** table later in this section, select the PE Series Gearhead with the appropriate performance and design options tailored to your motor choice and exact application requirements. Use the part number guide below as a reference to build a part number for the complete gearhead assembly.

Part Number Examples:

1	2	3	4	5	6	7	8	9	10
PE	3	2	1	S	P	S	S	0030	ME

	Design Option	Part Number Code	Description
1	**Series**	**PE**	Economical planetary
2	**Size**	**2 3 4 5**	4 sizes of gearhead
3	**Generation**	**2**	Version of gearhead
4	**# of Stages**	**1** **2**	One stage for ratios of ≤ 10:1 Two stage for ratios >10:1
5	**Housing**	**S**	Standard mounting style
6	**Output**	**P**	Shaft with key
7	**Bearings**	**S**	Standard
8	**Backlash**	**S**	Standard Backlash
9	**Ratio**	**0030**	Ratios range from 3:1 to 100:1 (0030=3:1; 0200=20:1; 1000=100:1, etc.)
10	**Motor Adapter**	**ME** **MEL**	Motor adapter w/standard input* Motor adapter w/large Input* *See Motor Mounting Plate Option, page 64

PE Series Performance Overview

PE Series performance is dependent on several factors including duty cycle, bearing design, gearhead size and stage configuration, among others. Use the chart below for preliminary evaluation, then use the following performance chart and selection information on the following pages for specific performance sizing and selection.

Size/Generation		PE22		PE32		PE42		PE52	
# of Stages		1	2	1	2	1	2	1	2
Permissible Acceleration Torque $M_{2ACCMAX}$	Nm	20	20	53	50	109	104	250	250
Output Torque Nom. [1] M_{2NMAX}	Nm	8	10	26	30	60	65	130	160
Torsional Stiffness C_{2MAX}	Nm/arcmin	1.4	1.4	4.4	4.2	14	13	35	33
Torsional Backlash [2] $\Delta\phi$	arcmin	≤10	≤13	≤8	≤10	≤8	≤10	≤8	≤10
Input Speed Max. n_{1MAX}	Continuous Cyclic	4500 8000		4000 7000	4500 8000	3600 6000	4000 7000	3000 5000	3600 6000
Efficiency (@nom torque)	%	1 Stage = 97; 2 Stage = 95							
Weight	kg lbs	1.3 2.87	1.4 3.09	2.5 5.51	2.4 5.29	4.7 10.36	5.1 11.24	8.8 19.40	10.0 22.05
Noise [3]	dB(A)	≤60	≤60	≤62	≤61	≤64	≤63	≤65	≤64

[1] *Ratings based on input speed (n_1) of 1500 RPM.*

For torque at higher input speeds (M_{2NX}) solve the formula:

$$M_{2NX} = \frac{M_{2N}}{\sqrt[3]{\frac{n_1}{1500}}}$$

where n_1 = Actual Input Speed.

[2] *Tested at 1.5% of nominal torque and recorded on the output side of the gearhead. For lower backlash, contact STOBER technical support.*

[3] *Measurement at one (1) meter distance with input speed (n_1) of 2000 RPM.*

PE Series Motor Mounting Plate Option (Motor information required with Motor Adapter option)

STOBER Servo Gearheads fit the motor of your choice with the appropriate motor mounting plate assembled between the motor and the gearhead.

NOTE: When ordering a gearhead:

- Specify the motor manufacturer and part number
- Provide the motor drawing with dimensions, or specify the motor mounting dimensions (per the list shown at right)

For a precise dimension on a specific motor, or for general assistance, we recommend you contact STOBER Technical Support.

Customer Required Dimensions for Properly Sized Motor Mounting Plate

d2	Motor Shaft Diameter (If an adapter bushing is required it will be supplied with the motor plate.)
b6	Pilot Diameter
e6	Bolt Circle Diameter
s6	Bolt Diameter
l5	Motor Shaft Length
f6	Pilot Length
a6	Square Flange (Optional – motor plate will typically be made to match this dimension.)

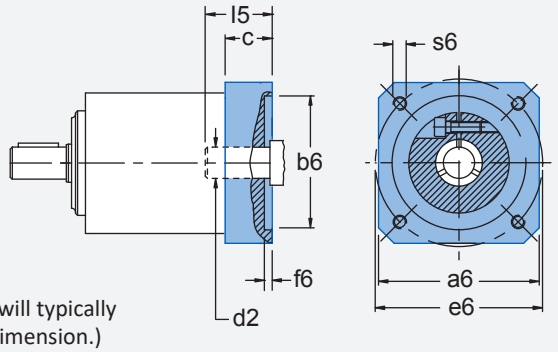

Motor Mounting Plate Dimensions — mm (Gearhead Part Number Specific)	PE221 PE222 PE322	PE221...L PE321 PE422	PE321...L PE421 PE522	PE421...L PE521	PE521...L
Maximum Allowed Motor Shaft Dia. d2	14	19	24	32	38
Minimum Allowed Motor Plate Thickness c*	15	18	21	24	26

** Note that the c motor plate thickness is determined by the motor shaft length. The minimum motor plate thickness is the value listed.*

PE Series Output Shaft Options ("P" designated in part number, for example: PE221S P 0040 MEL)

P Shaft with Key

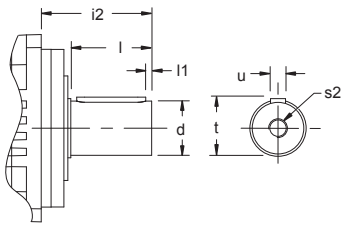

Unit	d k6		i2	l	l1	s2 (1)	t	u (2)
	mm		mm	mm	mm		mm	W x H x L
PE2	12	+0.012/+0.001	24.5	18	2	M4	13.5	A4x4x14
PE3	16	+0.012/+0.001	36	28	2	M5	18.0	A5x5x22
PE4	22	+0.015/+0.002	46	36	2	M8	24.5	A6x6x32
PE5	32	+0.018/+0.002	70	58	4	M12	35.0	A10x8x50

(1) *The center hole in shafts with keys (Option "P") are machined to DIN 332 T2 shape DR.*

(2) *Feather keys are toleranced according to standard DIN 6885.*



Overview

Permissible Motor Tilting Torque

The permissible tilting torque of the motor attached to the gear unit is a result of the static and dynamic load "F" from the motor weight, mass acceleration, and vibration multiplied by the distance from the center of gravity "l_S" of the motor.

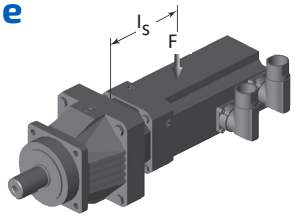

$$M_{1k} = F \times l_S \leq M_{1K}$$

M_{1K}	PE221 PE222 PE322	PE321 PE322	PE421 PE422	PE521
Nm	10	20	40	80

PE Permissible Output Shaft Load and Tilting Moments*

	Z_2 Distance of Shaft Shoulder to Center of Output Bearing	F_{2ax100} Permitted Axial Force	$F_{2rad100}$ Permitted Radial Force ≤100RPM	M_{2K100} Permitted Tilting Torque ≤100RPM
Unit	mm	N	N	Nm
PE221, PE222	8	400	800	13
PE321, PE322	11	800	1600	40
PE421, PE422	13	1900	2400	73
PE521, PE522	16	4000	4600	206

** Refer to illustration and definitions below. During EMERGENCY OFF operation (maximum stops per gearhead = 1000) the permissible values in the table for F_{2A}, F_{2R}, and M_{2K} can be multiplied by a factor of 2. Rating based on output speed (n_2) of 100 RPM. For values at other speeds see below.*

PE Series Load/Life/Speed Calculations

All formulas shown are based on METRIC values

Upper case letters are permissible values. Lower case letters are for existing values.

The permissible load and tilting moment values are based on an output speed of 100 RPM. For higher speeds the following applies, where n_2 is the desired speed:

$$F_{2AX} = \frac{F_{2ax100}}{\sqrt[3]{\frac{n_2}{100}}} \qquad F_{2RX} = \frac{F_{2rad100}}{\sqrt[3]{\frac{n_2}{100}}} \qquad M_{2KX} = \frac{M_{2K100}}{\sqrt[3]{\frac{n_2}{100}}}$$

The application output tilting moment should be determined by the following formula:

$$M_{2k,acc*} = \frac{2 \bullet F_{2ax*} \bullet Y_2 + F_{2rad,acc*} \bullet (x_2+z_2)}{1000} \leq M_{2k,acc}$$

Where:

Z_2	Distance of Shaft Shoulder to Center of Output Bearing
n_2	Actual Average Output Speed
X_2	Distance of the Shaft Shoulder to the Force Application Point
Y_2	Distance of the Shaft Axis to the Axial Force Application Point
F_{2ax*}	Actual Axial Force at Gear Unit Output
F_{2ax100}	Permitted Axial Force
$F_{2rad100}$	Permitted Radial Force ≤100RPM
$F_{2rad,acc}$	Radial Acceleration Force
$F_{2rad,acc*}$	Radial Acceleration Force at Gear Unit Output
M_{2K100}	Permitted Tilting Torque ≤100RPM
$M_{2K,acc}$	Permitted Acceleration Tilting Torque
$M_{2k,acc*}$	Permitted Acceleration Tilting Torque at Gear Unit Output
C_{2K}	Tilting Stiffness

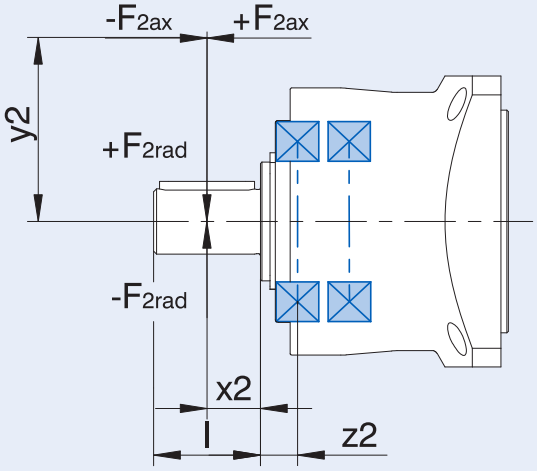

The following apply to the bearing service life L10h (ED10≤40%):

$L_{10h} > 10{,}000h$ with $1 < M_{2kN}/M_{2k*} < 1.25$

$L_{10h} > 20{,}000h$ with $1.25 < M_{2kN}/M_{2k*} < 1.5$

$L_{10h} > 30{,}000h$ with $1.5 < M_{2kN}/M_{2k*}$

For different duty cycles:

$L_{10h} > L_{10h(ED_{10}=40\%)} \ (40\%/ED_{10})$

Exact Ratio (i)	Output Torque: Nom. [1] M_{2N} Nm	Output Torque: Accel. M_{2acc} Nm	Output Torque: Peak [2] M_{2NOT} Nm	Back-lash $\Delta\phi_2$ arcmin	Part Number* (Gearhead + Input)	Max. Input Speed RPM (n1): Cont.	Max. Input Speed RPM (n1): Cyclic	Motor Shaft Max Ø d_{MW} mm	Input Inertia [3] J_1 kgcm²	Tors. Stiffness C_2 Nm/arcmin	Oper. Noise L_{pA} dB(A)
PE2											
4.000	8.0	20	32	10	**PE221_0040 ME**	4000	8000	≤14	0.12	1.4	60
					PE221_0040 MEL			≤19	0.41		
5.000	8.0	20	32	10	**PE221_0050 ME**	4000	8000	≤14	0.11	1.4	58
					PE221_0050 MEL			≤19	0.40		
7.000	8.0	18	32	10	**PE221_0070 ME**	4500	8000	≤14	0.10	1.3	56
					PE221_0070 MEL			≤19	0.39		
10.00	8.0	17	32	10	**PE221_0100 ME**	4500	8000	≤14	0.10	1.2	54
					PE221_0100 MEL			≤19	0.39		
16.00	10	19	32	13	**PE222_0160 ME**	4000	8000	≤14	0.14	1.4	60
					PE222_0160 MEL			≤19	0.42		
20.00	10	20	32	13	**PE222_0200 ME**	4000	8000	≤14	0.12	1.4	60
					PE222_0200 MEL			≤19	0.41		
25.00	10	20	32	13	**PE222_0250 ME**	4000	8000	≤14	0.12	1.4	59
					PE222_0250 MEL			≤19	0.41		
28.00	10	19	32	13	**PE222_0280 ME**	4000	8000	≤14	0.11	1.4	59
					PE222_0280 MEL			≤19	0.40		
35.00	10	20	32	13	**PE222_0350 ME**	4000	8000	≤14	0.11	1.4	58
					PE222_0350 MEL			≤19	0.40		
40.00	10	19	32	13	**PE222_0400 ME**	4500	8000	≤14	0.10	1.4	58
					PE222_0400 MEL			≤19	0.39		
50.00	10	20	32	13	**PE222_0500 ME**	4500	8000	≤14	0.10	1.4	57
					PE222_0500 MEL			≤19	0.39		
70.00	10	18	32	13	**PE222_0700 ME**	4500	8000	≤14	0.10	1.3	56
					PE222_0700 MEL			≤19	0.39		
100.0	10	17	32	13	**PE222_1000 ME**	4500	8000	≤14	0.10	1.2	55
					PE222_1000 MEL			≤19	0.39		

[1] *Based on input speed of 1500 RPM. See page 63 for details on torque calculations.*
[2] *Maximum momentary torque for emergency stops or heavy shock load. (Admissible stops per life of gearhead = 1,000 stops maximum.)*
[3] *Inertia based on maximum input. For lower inertia, using smaller diameter input, contact STOBER.*
* *ME = Motor Accurate L = Large Input Option*

Selection Data



Exact Ratio (i)	Output Torque: Nom. [1] M_{2N} Nm	Output Torque: Accel. M_{2acc} Nm	Output Torque: Peak [2] M_{2NOT} Nm	Back-lash $\Delta\phi_2$ arcmin	Part Number* (Gearhead + Input)	Max. Input Speed RPM (n1): Cont.	Max. Input Speed RPM (n1): Cyclic	Motor Shaft Max Ø d_{MW} mm	Input Inertia [3] J_1 kgcm²	Tors. Stiffness C_2 Nm/arcmin	Oper. Noise L_{pA} dB(A)
PE3											
3.000	21	40	80	8	PE321_0030 ME	3500	6000	≤19	0.56	3.4	62
					PE321_0030 MEL			≤24	0.99		
4.000	24	46	90	8	PE321_0040 ME	3700	7000	≤19	0.47	4.3	61
					PE321_0040 MEL			≤24	0.90		
5.000	25	53	90	8	PE321_0050 ME	3700	7000	≤19	0.44	4.4	59
					PE321_0050 MEL			≤24	0.87		
7.000	26	50	90	8	PE321_0070 ME	4000	7000	≤19	0.41	4.1	57
					PE321_0070 MEL			≤24	0.84		
10.00	26	48	90	8	PE321_0100 ME	4000	7000	≤19	0.40	3.7	55
					PE321_0100 MEL			≤24	0.83		
16.00	30	45	90	10	PE322_0160 ME	4000	8000	≤14	0.16	4.0	61
					PE322_0160 MEL			≤19	0.45		
20.00	30	50	90	10	PE322_0200 ME	4000	8000	≤14	0.16	4.0	61
					PE322_0200 MEL			≤19	0.44		
25.00	30	50	90	10	PE322_0250 ME	4000	8000	≤14	0.13	4.2	60
					PE322_0250 MEL			≤19	0.42		
28.00	30	44	88	10	PE322_0280 ME	4000	8000	≤14	0.12	4.0	60
					PE322_0280 MEL			≤19	0.40		
35.00	30	50	90	10	PE322_0350 ME	4000	8000	≤14	0.11	4.2	59
					PE322_0350 MEL			≤19	0.40		
40.00	30	44	88	10	PE322_0400 ME	4500	8000	≤14	0.10	3.9	59
					PE322_0400 MEL			≤19	0.39		
50.00	30	50	90	10	PE322_0500 ME	4500	8000	≤14	0.10	4.1	58
					PE322_0500 MEL			≤19	0.39		
70.00	30	50	90	10	PE322_0700 ME	4500	8000	≤14	0.10	4.0	57
					PE322_0700 MEL			≤19	0.39		
100.0	30	48	90	10	PE322_1000 ME	4500	8000	≤14	0.10	3.6	56
					PE322_1000 MEL			≤19	0.39		

[1] *Based on input speed of 1500 RPM. See page 63 for details on torque calculations.*
[2] *Maximum momentary torque for emergency stops or heavy shock load. (Admissible stops per life of gearhead = 1,000 stops maximum.)*
[3] *Inertia based on maximum input. For lower inertia, using smaller diameter input, contact STOBER.*
* *ME = Motor Accurate L = Large Input Option*

Exact Ratio (i)	Output Torque: Nom. [1] M_{2N} Nm	Output Torque: Accel. M_{2acc} Nm	Output Torque: Peak [2] M_{2NOT} Nm	Back-lash $\Delta\phi_2$ arcmin	Part Number* (Gearhead + Input)	Max. Input Speed RPM (n1): Cont.	Max. Input Speed RPM (n1): Cyclic	Motor Shaft Max Ø d_{MW} mm	Input Inertia [3] J_1 kgcm²	Tors. Stiffness C_2 Nm/arcmin	Oper. Noise L_{pA} dB(A)
PE4											
3.000	45	90	180	8	PE421_0030 ME	3000	5500	≤24	1.4	12	64
					PE421_0030 MEL			≤32	3.0		
4.000	55	100	200	8	PE421_0040 ME	3400	6000	≤24	1.1	14	63
					PE421_0040 MEL			≤32	2.7		
5.000	56	109	200	8	PE421_0050 ME	3400	6000	≤24	1.0	14	61
					PE421_0050 MEL			≤32	2.6		
7.000	60	100	200	8	PE421_0070 ME	3600	6000	≤24	0.91	12	59
					PE421_0070 MEL			≤32	2.5		
10.00	60	92	184	8	PE421_0100 ME	3600	6000	≤24	0.87	10	57
					PE421_0100 MEL			≤32	2.5		
16.00	65	95	190	10	PE422_0160 ME	3700	7000	≤19	0.52	13	63
					PE422_0160 MEL			≤24	0.95		
20.00	65	104	200	10	PE422_0200 ME	3700	7000	≤19	0.51	13	63
					PE422_0200 MEL			≤24	0.94		
25.00	65	103	200	10	PE422_0250 ME	3700	7000	≤19	0.47	13	62
					PE422_0250 MEL			≤24	0.90		
28.00	65	95	190	10	PE422_0280 ME	4000	7000	≤19	0.43	13	62
					PE422_0280 MEL			≤24	0.86		
35.00	65	103	200	10	PE422_0350 ME	4000	7000	≤19	0.42	13	61
					PE422_0350 MEL			≤24	0.85		
40.00	65	95	190	10	PE422_0400 ME	4000	7000	≤19	0.41	13	61
					PE422_0400 MEL			≤24	0.84		
50.00	65	102	200	10	PE422_0500 ME	4000	7000	≤19	0.41	13	60
					PE422_0500 MEL			≤24	0.83		
70.00	65	90	180	10	PE422_0700 ME	4000	7000	≤19	0.42	10	59
					PE422_0700 MEL			≤24	0.85		
100.0	65	90	180	10	PE422_1000 ME	4000	7000	≤19	0.40	10	58
					PE422_1000 MEL			≤24	0.83		

[1] *Based on input speed of 1500 RPM. See page 63 for details on torque calculations.*
[2] *Maximum momentary torque for emergency stops or heavy shock load. (Admissible stops per life of gearhead = 1,000 stops maximum.)*
[3] *Inertia based on maximum input. For lower inertia, using smaller diameter input, contact STOBER.*
* *ME = Motor Accurate L = Large Input Option*

Selection Data



Exact Ratio (i)	Output Torque: Nom. [1] M_{2N} Nm	Output Torque: Accel. M_{2acc} Nm	Output Torque: Peak [2] M_{2NOT} Nm	Back-lash $\Delta\phi_2$ arcmin	Part Number* (Gearhead + Input)	Max. Input Speed RPM (n1): Cont.	Max. Input Speed RPM (n1): Cyclic	Motor Shaft Max Ø d_{MW} mm	Input Inertia [3] J_1 kgcm²	Tors. Stiffness C_2 Nm/arcmin	Oper. Noise L_{pA} dB(A)
PE5											
3.000	90	180	360	8	PE521_0030 ME	2500	4500	≤32	4.4	31	65
					PE521_0030 MEL			≤38	7.9		
4.000	130	250	500	8	PE521_0040 ME	2600	5000	≤32	3.5	35	64
					PE521_0040 MEL			≤38	7.0		
5.000	130	250	500	8	PE521_0050 ME	2600	5000	≤32	3.1	35	62
					PE521_0050 MEL			≤38	6.6		
7.000	130	250	500	8	PE521_0070 ME	2800	5000	≤32	2.8	32	60
					PE521_0070 MEL			≤38	6.3		
10.00	130	220	440	8	PE521_0100 ME	3000	5000	≤32	2.7	27	58
					PE521_0100 MEL			≤38	6.2		
16.00	160	240	480	10	PE522_0160 ME	3400	6000	≤24	1.2	33	64
					PE522_0160 MEL			≤32	2.8		
20.00	160	250	500	10	PE522_0200 ME	3400	6000	≤24	1.2	33	64
					PE522_0200 MEL			≤32	2.8		
25.00	160	250	500	10	PE522_0250 ME	3400	6000	≤24	1.0	33	63
					PE522_0250 MEL			≤32	2.7		
28.00	160	240	480	10	PE522_0280 ME	3600	6000	≤24	0.95	33	63
					PE522_0280 MEL			≤32	2.6		
35.00	160	250	500	10	PE522_0350 ME	3600	6000	≤24	0.94	33	62
					PE522_0350 MEL			≤32	2.5		
40.00	160	240	480	10	PE522_0400 ME	3600	6000	≤24	0.89	33	62
					PE522_0400 MEL			≤32	2.5		
50.00	160	250	500	10	PE522_0500 ME	3600	6000	≤24	0.89	33	61
					PE522_0500 MEL			≤32	2.5		
70.00	160	220	440	10	PE522_0700 ME	3600	6000	≤24	0.93	27	60
					PE522_0700 MEL			≤32	2.5		
100.0	160	220	440	10	PE522_1000 ME	3600	6000	≤24	0.88	27	59
					PE522_1000 MEL			≤32	2.5		

[1] *Based on input speed of 1500 RPM. See page 63 for details on torque calculations.*
[2] *Maximum momentary torque for emergency stops or heavy shock load. (Admissible stops per life of gearhead = 1,000 stops maximum.)*
[3] *Inertia based on maximum input. For lower inertia, using smaller diameter input, contact STOBER.*
* *ME = Motor Accurate L = Large Input Option*

PE with ME Input

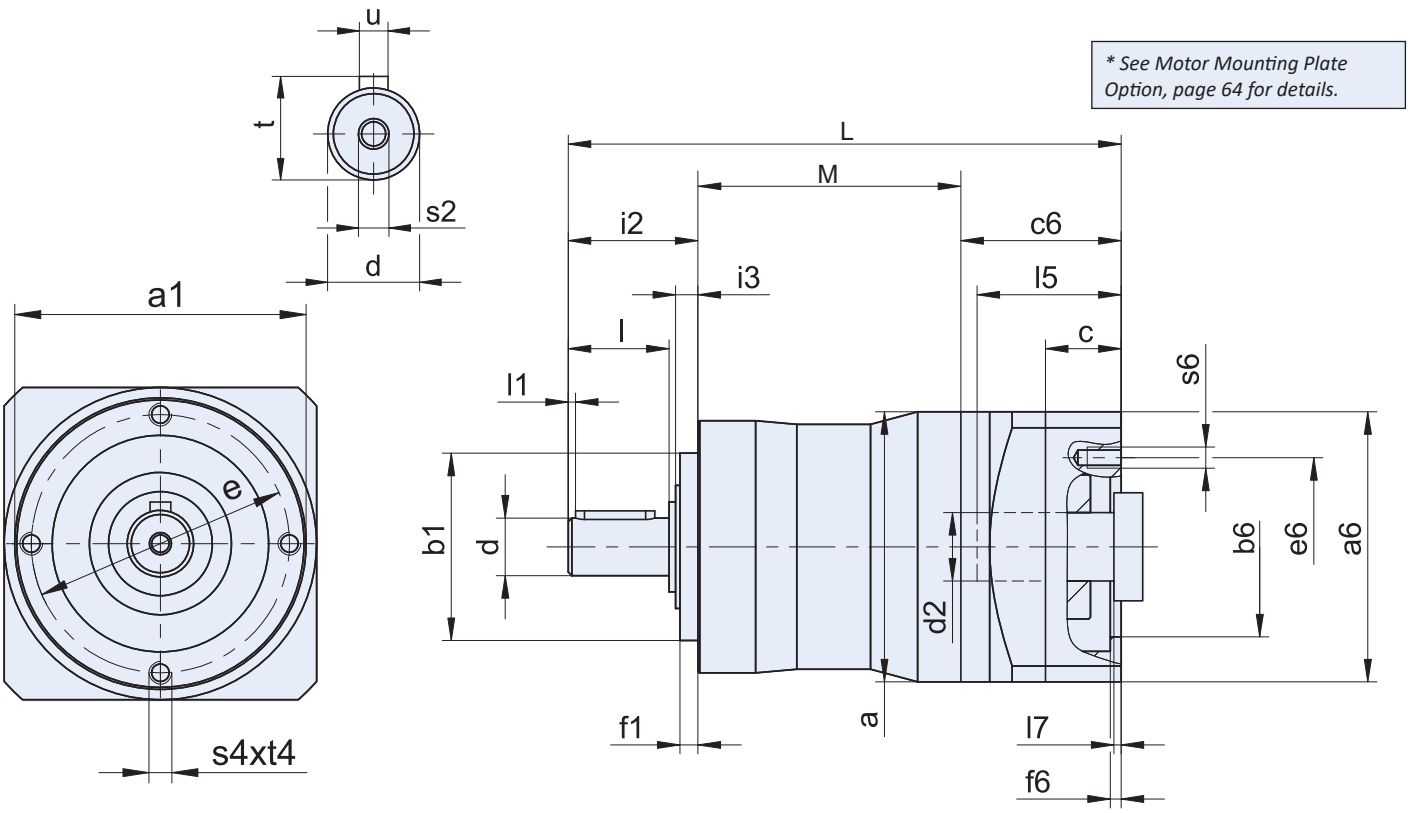

Table 1 PE Unit Dimensions (mm)

Unit	a	a1	b1	h6	d	k6	e	f1	i2	l	l1	i3	s2	s4	t	t4	u
PE221/PE222	55	50	35	+0.000/-0.016	12	+0.012/+0.001	44	4	24.5	18	2	5.0	M4	M4	13.5	8	A4x4x14
PE321/PE322	75	70	52	+0.000/-0.019	16	+0.012/+0.001	62	5	36	28	2	6.0	M5	M5	18	10	A5x5x22
PE421/PE422	100	90	68	+0.000/-0.019	22	+0.015/+0.002	80	5	46	36	2	6.5	M8	M6	24.5	12	A6x6x32
PE521/PE522	120	120	90	+0.000/-0.022	32	+0.018/+0.002	108	6	70	58	4	8.0	M12	M8	35	16	A10x8x50

Table 2 PE Unit Dimensions (mm)

Unit	L	M
PE221	109.5	53
PE222	141.5	85
PE321	150.5	73
PE322	168	100
PE421	167	78.5
PE422	204	116.5
PE521	222	98
PE522	251	138.5

Table 3 ME Dimensions (mm)

Unit	c	Ød
PE221	15	14
PE222	15	14
PE321	18	19
PE322	15	14
PE421	21	24
PE422	18	19
PE521	24	32
PE522	21	24

Dimensional Data



Table 1 Dimensions (mm)

Unit	Øb6	Øe6	Ød2max	l5	□a6	c	c6	f6	l7	lg	s6
PE221_ME	40^{H7}	63	14	30	55	15	32.0	3.5	3.0	109.5	M5
PE222_ME	40^{H7}	63	14	30	55	15	32.0	3.5	3.0	141.5	M5
PE321_ME	60^{H7}	75	19	41	75	18	41.5	3.5	4.0	150.5	M5
PE322_ME	40^{H7}	63	14	30	55	15	32.0	3.5	3.0	168.0	M5
PE421_ME	95^{H7}	115	24	41	100	21	42.5	4.0	3.5	167.0	M8
PE422_ME	60^{H7}	75	19	41	75	18	41.5	3.5	4.0	204.0	M5
PE521ME	110^{H7}	130	32	51	120	24	54.0	4.0	4.5	222.0	M8
PE522_ME	95^{H7}	115	24	41	100	21	42.5	4.0	3.5	251.0	M8

In the table above, you will find example dimensions for the motor connection for the ME motor adapter. Note that when dimension c is lengthened (depending on the motor used), dimensions c6, l5 and lg are also lengthened accordingly. You will find additional motor connection dimensions for motor adapters ME and MEL in our STOBER Configurator at https://configurator.stober.com. Here, you can directly download a 3D model of your drive.

C Series: INLINE — Shaft Output

C Features

- 2:1 to 276:1 ratios (higher ratios available. Contact STOBER.)
- Quiet running (As low as 53dB(A))
- Mounting flexibility to fit the application
- Adaptability: shafts available in metric or imperial, carbon or stainless steel to meet your requirements
- Optional food and corrosion resistant package
- Dual seals for extreme duty applications
- Error free motor mounting and quick changeover with toleranced pilot on motor plate
- Magnetic oil filtration to remove contaminants to prevent breakdowns
- Build and ship in one day
- Assembled in the USA

The STOBER C Series offer performance, durability, and economy for a wide range of applications. High efficiency helical gearing keeps motor size to a minimum while running almost silently. Easily install the C series with a variety of mounting configurations, including the foot mounted option. Every gearbox is made to order. STOBER will custom whatever you need to fit your application. Contact us today to learn more.

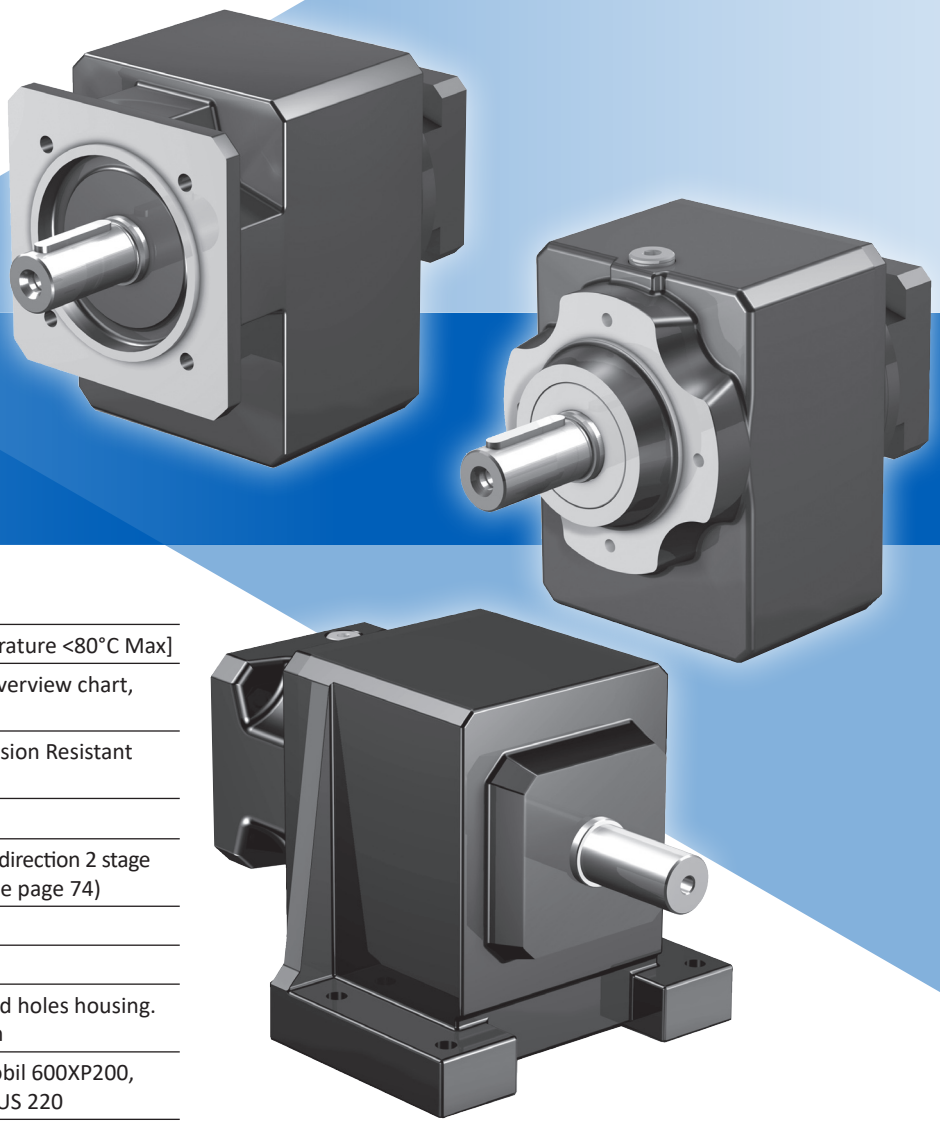

SHIPS in 1 DAY!
NO EXPEDITE FEE FOR 24 HOUR SERVICE

General Specifications

Ambient Temperature	0°C to +40°C (104°F) [Unit temperature <80°C Max]
Backlash	≤10 arcmins, (see performance overview chart, (page 75)
Coating	Standard Black (RAL-9005), Corrosion Resistant option, Food option
Degree of Protection	IP65
Direction of Rotation	Input and output rotate the SAME direction 2 stage units, opposite for 3 stage units (see page 74)
Efficiency	2 stage 97%; 3 stage 96%
Input RPM	Up to 6,000 RPM
Installation	Requires 10.9 fasteners for tapped holes housing. See page 288 for more information
Lubrication	Lubricated for life* - standard Mobil 600XP200, option food grade Mobil SHC CIBUS 220
Mounting Position	Must be specified, see page 74
Warranty	5 Year Limited (2 Years on normal wear items: bearings, seals, etc.)

** Scheduled lubrication is required for some larger frame C Series units (excluding F Food Duty and B Corrosion Resistant option). See page 77 for lubrication details.*

Benefits of NEW ME Motor Adapters

- Higher torques
- Higher input speeds
- More compact with square coupling housing
- More clamp ring options, so less need for adapter bushings
- Clamp ring with roll pin

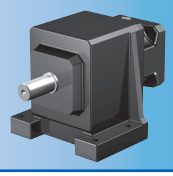

Overview

Selection Options *At-a-Glance*

Using the **Selection Data** table later in this section, select the C Series Gearhead with the appropriate performance and design options tailored to your motor choice and exact application requirements. Use the part number guide below as a reference to build a part number for the complete gearhead assembly.

Part Number Examples:

1	2	3	4	5	6	7	8	
C	0	0	2	F	0020	ME10	B	EL1 *

	Design Option		Part Number Code	Description
1	**Series**		C	Concentric inline helical
2	**Size**		0 1 2 3 4 5 6 7 8 9	10 sizes of gearhead
3	**Generation**		0 1	Version of gearhead
4	**# of Stages**		2 3	Two stage for ratios <70:1 Three stage >40:1
5	**Housing**	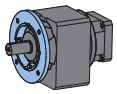	F	Round output flange
		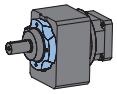	G	Pitch Circle Diameter (PCD) tapped holes
		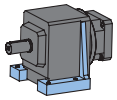	N	Foot mounting
		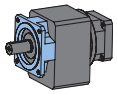	Q	Square output flange (not bolt-on type)
6	**Ratio**		0020	Ratios range from 2:1 to 276:1 (0020=2:1; 0063=6.3:1; 2700=270:1)
7	**Motor Adapter**		ME10 – ME50	5 input sizes (see also motor mounting plate option)
8	**Options**		B F	Corrosion Resistant Duty (size C0 thru C8 only) Food Duty (size C0 thru C8 only)
*	**Mounting Position**		EL1 EL2 EL3 EL4 EL5 EL6	Required special instruction for all units, see page 74

Options

ME Adapter Option

- MSS1 Seal – special input seal for longer life. Contact factory for this option.
- Peak Torque Booster – pinion securing element for shock loads, increasing peak torque up to 80%.

Lubrication Options

- Food grade or synthetic optionally available. Contact factory for this option.

Integrated Safety Brake

- ServoStop – provides dynamic braking during power failures or emergency stops in hazardous situations. Contact factory for this option.

Coating Option

- Corrosion Resistant Duty (**B** special option)
- Food Duty (**F** special option)

Food and Corrosion Resistant units are lubricated for life with double output seals (where possible), stainless output shaft, and heat cured paint.

ATEX

- ATmosphere EXplosible – rated for explosive environments. Contact factory for this option and allow additional time for delivery.

C Series Performance Overview

C Series performance is dependent on several factors including duty cycle, bearing design, gearhead size and stage configuration, among others. Use the chart below for preliminary evaluation, then use the following performance chart and selection information on the following pages for specific performance sizing and selection.

Size/Generation			C00	C10		C20		C30	
# of Stages			2	2	3	2	3	2	3
Permissible Acceleration Torque M_{2BMAX}		Nm	72	140		230		400	
Output Torque Nom. M_{2N}		Nm	60	120		200		350	
Torsional Stiffness	C_2	Nm/arcmin	≤1.6	≤3.9	≤3.9	≤8.3	≤8.3	≤8.7	≤8.7
Torsional Backlash [1]	$\Delta\phi$	arcmin	≤16	≤15	≤15	≤14	≤16	≤13	≤13
Input Speed Max. n_{1MAX}	Continuous	EL1, 2, 3, 4 (N1DBH)	4000	4000	4000	4000	4000	3700	3800
		EL5, 6 (N1DBV)	4000	3900	3900	3900	3900	3500	3500
	Cyclic		6000	6500	6500	6500	6500	6000	6000
Efficiency (@nom torque)		%	97	97	96	97	96	97	96
Weight		kg lbs	8.2 18	13.1 29	15.4 34	17.2 38	20.4 45	22.2 49	25.4 56
Noise [2]		dB(A)	≤55	≤55		≤53		≤53	
Axial Load Max. F_{2AMAX}		N	500	850		1050		1400	
Radial Load Max. [3] F_{2RMAX}		N	1900	3400		4200		5650	
Tilting Moment Max. [3] M_{2KMAX}		Nm	80	190		260		350	

[1] *Tested at 1.5% of nominal torque and recorded on the output side of the gearhead. For lower backlash, contact STOBER technical support.*
[2] *Measurement at one (1) meter distance with input speed (n_1) of 1500 RPM. To calculate torque at higher input speeds, contact the factory.*
[3] *Rating based on output speed (n_2) of 20 RPM. For values at other speeds see page 77.*

C Series Direction of Rotation

All 2 Stage Units

C002 C612
C102 C712
C202 C812
C302 C912
C402
C502

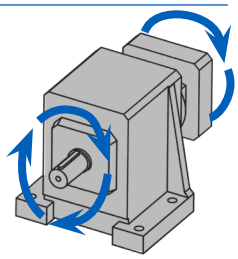

All 3 Stage Units

C103 C613
C203 C713
C303 C813
C403 C913
C503

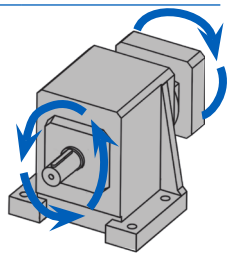

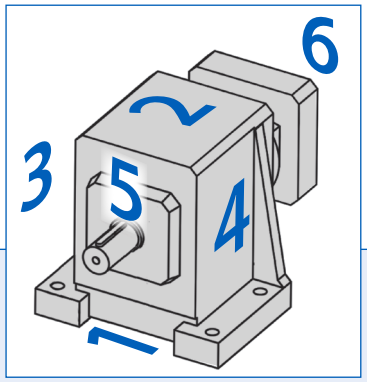

C Series Mounting Position Options

When ordering, the Mounting Position MUST BE SPECIFIED using one of the Mounting Position order codes below.

Note: the code relates to the unit's orientation side that faces down.
For example, EL1 has side 1 facing down, EL2 has side 2 facing down, etc.

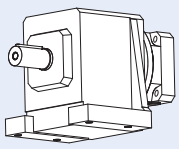
EL1

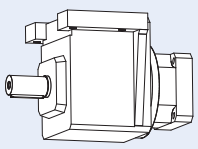
EL2

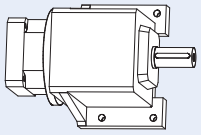
EL3

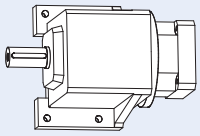
EL4

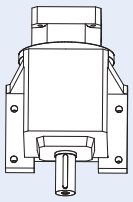
EL5

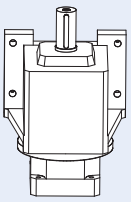
EL6

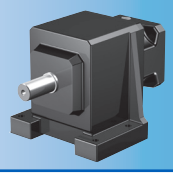

Overview

	C40		C50		C61		C71		C81		C91	
	2	3	2	3	2	3	2	3	2	3	2	3
	600		920		1650		2760		4800		7210	8000
	550		800		1450		2400		4200		6000	7000
	≤22.0	≤22.0	≤23	≤23	≤74	≤74	≤122	≤122	≤204	≤204	≤392	≤393
	≤12	≤12	≤12	≤12	≤10	≤10	≤10	≤10	≤10	≤10	≤10	≤10
	3500	3500	3400	3400	3200	3200	3100	3100	2900	2900	2500	2800
	3200	3200	3000	3000	2900	2900	2900	2900	2700	2700	2500	2600
	5500	5500	5000	5000	4500	4500	4500	4500	4300	4300	4000	4000
	97	96	97	96	97	96	97	96	97	96	97	96
	32.2 71	35.3 78	43.0 95	50.3 111	52.1 115	72.0 159	90.1 199	100.1 221	145.9 322	154.9 342	270.0 596	307.1 678
	≤61		≤61		≤61		≤67		≤67		≤73	
	2400		3000		4000		5500		7500		9500	
	9700		11,000		16,000		22,000		30,000		37,000	
	750		900		1500		2400		3700		5200	

C Series Solid Output Shaft Options

Diameters in **BOLD BLUE** are readily available from inventory. Contact STOBER Drives for delivery on other output sizes.

		C0	C1	C2	C3	C4	C5	C6	C7	C8	C9
Carbon Steel	**Inches**	**3/4**	**1**	**1-1/4**	**1-1/4**	**1-5/8**	**1-5/8**	**2-1/8**	**2-3/8**	**2-7/8**	**3-5/8**
	Metric	20	25	30	30	40	40	50	60	70	90
Stainless Steel*	**Inches**	**3/4**	**1**	**1-1/4**	**1-1/4**	**1-5/8**	**1-5/8**	**2-1/8**	**2-3/8**	**2-7/8**	—
	Metric	20	25	30	30	40	—	60	—	—	—

** Stainless steel options are ideal for food and corrosion resistant, harsh washdown environments.*

C Series Standard & Optional Output Flange Sizes

BOLD BLUE are the standard flange size shipped with the unit unless otherwise specified. Optional flanges are not available for all sizes.

C0	C1	C2	C3	C4	C5	C6	C7	C8	C9
120	140	160	160	200	250	**300**	**350**	350	**450**
140	160	**200**	200	**250**	**300**			**400**	
160	**200**	250	**250**	300				450	

C Series Motor Mounting Plate Option (Motor information required with Motor Adapter ME option)

STOBER Servo Gearheads fit the motor of your choice with the appropriate motor mounting plate assembled between the motor and the gearhead.

NOTE: When ordering a gearhead:

- Specify the motor manufacturer and part number
- Provide the motor drawing with dimensions, or specify the motor mounting dimensions (per the list shown at right)

For a precise dimension on a specific motor, or for general assistance, we recommend you contact STOBER Technical Support.

Customer Required Dimensions for Properly Sized Motor Mounting Plate

d2	Motor Shaft Diameter (If an adapter bushing is required it will be supplied with the motor plate.)
b6	Pilot Diameter
e6	Bolt Circle Diameter
s6	Bolt Diameter
l5	Motor Shaft Length
f6	Pilot Length
a6	Square Flange (Optional – motor plate will typically be made to match this dimension.)

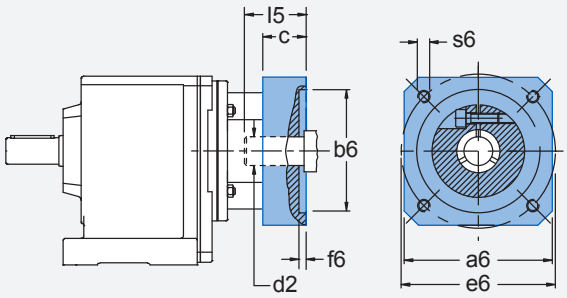

Motor Mounting Plate Dimensions — mm(Gearhead Part Number Specific)	ME10	ME20	ME30	ME40	ME50
Maximum Allowed Motor Shaft Dia. d2	19	32	38	48	60
Minimum Allowed Motor Plate Thickness c*	21	24	26	35	43

** Note that the c motor plate thickness is determined by the motor shaft length. The minimum motor plate thickness is the value listed.*

C Series Motor Mounting Plate Access Hole

Access to the clamping screw for the motor coupling is located on the 270° side of the motor mounting plate at the location shown. If necessary, the motor mounting plate can be rotated in the field, if a 0°, 90° or 180° orientation for the access hole is desirable.

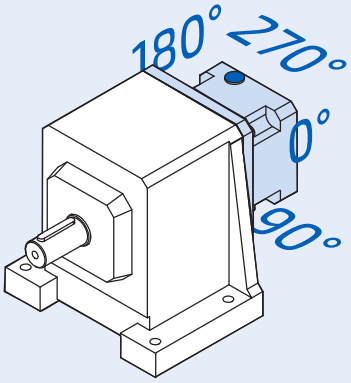

Permissible Motor Tilting Torque

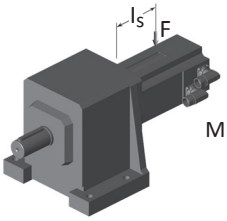

$$M_{1k} = F \times l_s \leq M_{1K}$$

The permissible tilting torque of the motor attached to the gear unit is a result of the static and dynamic load "F" from the motor weight, mass acceleration, and vibration multiplied by the distance from the center of gravity "l_s" of the motor.

M_{1K}	ME10	ME20	ME30	ME40	ME50
Nm	25	60	125	250	600

Permissible Output Shaft Load and Tilting Moments*

Unit	Z_2 mm	F_{2A} N	F_{2R} N	M_{2K} Nm
C0	20	500	1900	80
C1	30	850	3400	190
C2	30	1050	4200	260
C3	30	1400	5650	350
C4	35	2400	9700	750
C5	42	3000	11,000	900
C6	40	4000	16,000	1500
C7	45	5500	22,000	2400
C8	50	7500	30,000	3700
C9	55	9500	37,000	5200

** Refer to illustration and definitions on page 77. During EMERGENCY OFF operation (maximum stops per gearhead = 1000) the permissible values in the table for F_{2A}, F_{2R}, and M_{2K} can be multiplied by a factor of 2. The permissible load values given are valid with the load applied to the center of the output shaft (x_2).*

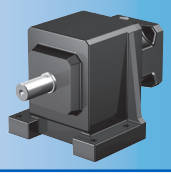

Overview

C Series Lubrication Maintenance

With STOBER reducers very little maintenance is required under normal operating conditions. Units C002 thru C502/C503 are supplied without breathers and are lubricated for life and maintenance free. Breathers are provided on standard units C612/C613 thru C912/C913, located as shown to the right*. STOBER recommends changing the lubrication in breather supplied units after 10,000 hours for normal operating conditions or every 5000 hours for wet operating conditions.

**C612/C613 and larger units with the Food & Corrosion Resistant option exclude a breather. Contact STOBER for details.*

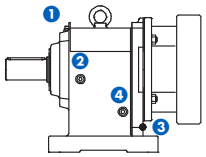

2 Stage Units
(C612 thru C912)

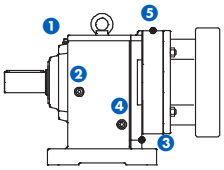

3 Stage Units
(C613 thru C913)

Drain Plug and Vent Location

Mounting Position		1	2 *	2a *	3	4	5
EL1		Vent			Drain		
EL2		Drain			Vent		
EL3			Vent	Drain			
EL4			Drain	Vent			
EL5	C612-C912	Drain			Vent		
	C613-C913	Drain					Vent
EL6		Vent			Drain		

** Position 2a is on the opposite side of 2.*

Overhung Load Calculations

Pulling forces or overhung load of pulleys, sheaves, sprockets, etc. on the reducer output shaft must not exceed the allowable limits shown in the load/life/speed calculations below.

Note: Overhung load is measured at the center of the shaft extension. No overhung load is encountered when a reducer is flange mounted and/or coupling connected to another unit. However, the shafts of all components must be accurately aligned and secured to prevent pre-loading of the bearings and premature bearing failure.

Use the following formula to determine actual overhung load for a given drive:.

$$\textbf{Imperial OHL (lbs)} = \frac{126{,}000 \times HP \times K}{D \times n}$$

$$\textbf{Metric OHL (N)} = \frac{19{,}100 \times kW \times K}{D \times n}$$

Where:

OHL	Overhung load
HP	Horsepower
kW	Transmitted Kilowatt
D	Pitch Diameter (inches or meters) of Sprocket, Gear, Sheave, Pulley, etc.
n	Maximum Shaft RPM
K	1.00 Single Chain Drive; 1.25 Timing Belt Drive; 1.25 Spur or Helical Gear Drive; 1.50 V-Belt Drive; 2.50 Flat Belt Drive

C Series Load/Life/Speed Calculations

The permissible load and tilting moment values are based on an output speed of 20 RPM. For higher speeds the following applies, where n_2 is the desired speed:

$$F_{2axN} = \frac{F_{2ax20}}{\sqrt[3]{\frac{n_{2m*}}{20\ rpm}}} \qquad F_{2radN} = \frac{F_{2rad20}}{\sqrt[3]{\frac{n_{2m*}}{20\ rpm}}} \qquad M_{2kN} = \frac{M_{2k20}}{\sqrt[3]{\frac{n_{2m*}}{20\ rpm}}}$$

The application output tilting moment should be determined by the following formula:

$$M_{2k*} = \frac{2 \bullet F_{2ax*} \bullet Y_2 + F_{2rad*} \bullet (x_2 + z_2)}{1000} \leq M_{2kN}$$

$$F_{2rad*} \leq F_{2radN} \qquad F_{2ax*} \leq F_{2axN}$$

All formulas shown are based on METRIC values

Upper case letters are permissible values. Lower case letters are for existing values.

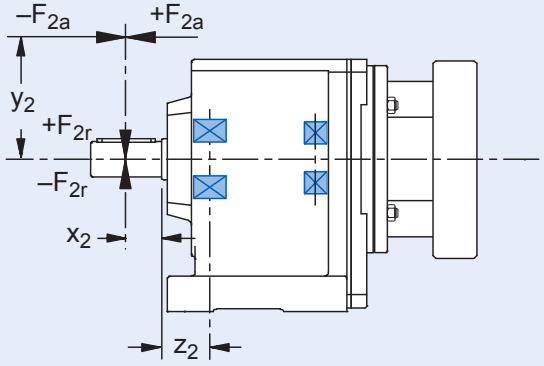

Where:

z_2	Distance of Shaft Shoulder to Center of Output Bearing
n_2	Actual Average Output Speed
x_2	Distance of the Shaft Shoulder to the Force Application Point
y_2	Distance of the Shaft Axis to the Axial Force Application Point
F_{2ax*}	Actual Axial Force at Gear Unit Output
F_{2ax100}	Permitted Axial Force
$F_{2rad100}$	Permitted Radial Force ≤100RPM
$F_{2rad,acc}$	Radial Acceleration Force
$F_{2rad,acc*}$	Radial Acceleration Force at Gear Unit Output
M_{2K100}	Permitted Tilting Torque ≤100RPM
$M_{2K,acc}$	Permitted Acceleration Tilting Torque
$M_{2k,acc*}$	Permitted Acceleration Tilting Torque at Gear Unit Output
C_{2K}	Tilting Stiffness

Reducer Ratio (i)		Output Torque			Backlash	Part Number	Max. Input Speed RPM (n1)			Motor Shaft Max Ø	Input Inertia	Tors. Stiffness
		Nom. [1]	Accel.	Peak [2]			Continuous		Cyclic			
		M_{2N}	M_{2acc}	M_{2NOT}	$\Delta\phi_2$					d_{MW}	J_1	C_2
Nom.	Exact	Nm	Nm	Nm	arcmin	(Gearhead + Input)	EL 1,2,3,4	EL 5,6	All	mm	kgcm²	Nm/ arcmin
C0	**(continued next page)**											
1.997	1480/741	35	47	58	20	C002_0020 ME10	3500	3000	6000	≤19	1.4	1.2
						C002_0020 ME20				≤24	3.3	
3.067	46/15	40	60	89	20	C002_0031 ME10	3700	3600	6000	≤19	1.0	1.2
						C002_0031 ME20				≤24	2.9	
3.318	1702/513	41	62	97	20	C002_0033 ME10	3700	3600	6000	≤19	1.0	1.2
						C002_0033 ME20				≤24	2.9	
4.680	117/25	46	65	110	20	C002_0047 ME10	4000	4000	6500	≤19	0.8	1.2
						C002_0047 ME20	3700	3700	6000	≤24	2.7	
5.063	481/95	47	65	110	20	C002_0051 ME10	4000	4000	6500	≤19	0.8	1.2
						C002_0051 ME20	3700	3700	6000	≤24	2.7	
7.714	54/7	54	65	110	20	C002_0077 ME10	4000	4000	7000	≤19	0.7	1.2
						C002_0077 ME20	3700	3700	6000	≤24	2.6	
8.235	667/81	60	72	120	16	C002_0082 ME10	3700	3600	6000	≤19	0.9	1.6
						C002_0082 ME20				≤24	2.8	
9.228	1495/162	60	65	120	16	C002_0092 ME10	3700	3600	6000	≤19	0.9	1.6
						C002_0092 ME20				≤24	2.8	
12.57	377/30	60	72	120	16	C002_0125 ME10	4000	4000	6500	≤19	0.8	1.6
						C002_0125 ME20	3700	3700	6000	≤24	2.7	
14.08	169/12	60	65	120	16	C002_0140 ME10	4000	4000	6500	≤19	0.8	1.6
						C002_0140 ME20	3700	3700	6000	≤24	2.7	
20.71	145/7	60	72	120	16	C002_0210 ME10	4000	4000	7000	≤19	0.7	1.6
						C002_0210 ME20	3700	3700	6000	≤24	2.6	
23.21	325/14	60	65	120	16	C002_0230 ME10	4000	4000	7000	≤19	0.7	1.6
						C002_0230 ME20	3700	3700	6000	≤24	2.6	
24.97	899/36	60	72	120	16	C002_0250 ME10	4000	4000	7000	≤19	0.7	1.6
						C002_0250 ME20	3700	3700	6000	≤24	2.6	
27.99	2015/72	60	65	120	16	C002_0280 ME10	4000	4000	7000	≤19	0.7	1.6
						C002_0280 ME20	3700	3700	6000	≤24	2.6	
31.26	2813/90	60	72	120	16	C002_0310 ME10	4000	4000	7000	≤19	0.7	1.6
						C002_0310 ME20	3700	3700	6000	≤24	2.6	
35.03	1261/36	60	65	120	16	C002_0350 ME10	4000	4000	7000	≤19	0.7	1.6
						C002_0350 ME20	3700	3700	6000	≤24	2.6	
41.77	3509/84	60	72	120	16	C002_0420 ME10	4000	4000	7000	≤19	0.6	1.6
55.97	2015/36	60	65	120	16	C002_0560 ME10	4000	4000	7000	≤19	0.6	1.6

[1] *Maximum torque for continuous input 1500 RPM - horizontal output position.*
[2] *Maximum momentary torque for emergency stops or heavy shock load. (Admissible stops per life of gearhead = 1,000 stops maximum.)*
* *Motor shaft adapter code (shaft diameter max - mm): ME10 (19), ME20 (32), ME30 (38), ME40 (48), ME50 (60)*

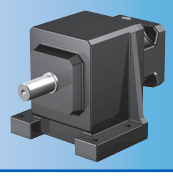

Selection Data

Reducer Ratio (i)		Output Torque			Backlash	Part Number	Max. Input Speed RPM (n1)			Motor Shaft Max Ø	Input Inertia	Tors. Stiffness
		Nom. [1]	Accel.	Peak [2]			Continuous		Cyclic			
		M_{2N}	M_{2acc}	M_{2NOT}	$\Delta\phi_2$					d_{MW}	J_1	C_2
Nom.	Exact	Nm	Nm	Nm	arcmin	(Gearhead + Input)	EL 1,2,3,4	EL 5,6	All	mm	kgcm²	Nm/ arcmin
C1	**(continued next page)**											
2.394	2303/962	74	110	174	18	C102_0024 ME20	3100	2600	5000	≤32	5.5	3.1
						C102_0024 ME30				≤38	11.0	
2.582	1911/740	75	13	8	18	C102_0026 ME20	3100	2600	5000	≤32	5.5	3.1
						C102_0026 ME30				≤38	11.0	
3.883	1363/351	69	90	110	18	C102_0039 ME10	3600	3100	6000	≤19	1.3	3.0
		86	130	220		C102_0039 ME20				≤32	4.8	3.1
						C102_0039 ME30	3500		5000	≤38	10.0	
4.189	377/90	74	98	122	18	C102_0042 ME10	3600	3100	6000	≤19	1.3	3.0
		89	130	220		C102_0042 ME20				≤32	4.7	3.1
						C102_0042 ME30	3500		5000	≤38	10.0	
4.658	3149/676	72	108	136	18	C102_0047 ME10	3800	3500	6000	≤19	1.2	3.1
		92	130	220		C102_0047 ME20	3700			≤32	4.6	
						C102_0047 ME30	3500		5000	≤38	9.9	
5.025	201/40	77	117	146	18	C102_0050 ME10	3800	3500	6000	≤19	1.2	3.1
		94	130	220		C102_0050 ME20	3700			≤32	4.6	
						C102_0050 ME30	3500		5000	≤38	9.9	
5.875	47/8	78	130	171	18	C102_0059 ME10	3800	3500	6000	≤19	1.0	3.1
		99		220		C102_0059 ME20	3700			≤32	4.4	
						C102_0059 ME30	3500		5000	≤38	9.7	
6.338	507/80	84	130	184	18	C102_0063 ME10	3800	3500	6000	≤19	1.0	3.1
		102		220		C102_0063 ME20	3700			≤32	4.4	
						C102_0063 ME30	3500		5000	≤38	9.7	
10.38	841/81	120	138	240	15	C102_0105 ME10	3600	3100	6000	≤19	1.2	3.9
						C102_0105 ME20				≤32	4.6	
						C102_0105 ME30	3500		5000	≤38	9.9	
11.72	1160/99	120	138	240	15	C102_0115 ME10	3600	3100	6000	≤19	1.2	3.9
						C102_0115 ME20				≤32	4.6	
						C102_0115 ME30	3500		5000	≤38	9.9	

[1] *Maximum torque for continuous input 1500 RPM - horizontal output position.*
[2] *Maximum momentary torque for emergency stops or heavy shock load. (Admissible stops per life of gearhead = 1,000 stops maximum.)*
* *Motor shaft adapter code (shaft diameter max - mm): ME10 (19), ME20 (32), ME30 (38), ME40 (48), ME50 (60)*

Reducer Ratio (i)		Output Torque			Backlash		Max. Input Speed RPM (n1)			Motor Shaft Max Ø	Input Inertia	Tors. Stiffness
		Nom. [1] M_{2N}	Accel. M_{2acc}	Peak [2] M_{2NOT}	$\Delta\phi_2$		Continuous		Cyclic	d_{MW}	J_1	C_2
Nom.	Exact	Nm	Nm	Nm	arcmin	Part Number (Gearhead + Input)	EL 1,2,3,4	EL 5,6	All	mm	kgcm²	Nm/ arcmin
C1		**(continued from previous page)**										
12.46	1943/156	120	138	240	15	C102_0125 ME10	3800	3500	6000	≤19	1.0	3.9
						C102_0125 ME20	3700			≤32	4.5	
						C102_0125 ME30	3500		5000	≤38	9.8	
14.06	2010/143	120	138	240	15	C102_0140 ME10	3800	3500	6000	≤19	1.0	3.9
						C102_0140 ME20	3700			≤32	4.4	
						C102_0140 ME30	3500		5000	≤38	9.8	
15.71	377/24	120	138	240	15	C102_0155 ME10	3800	3500	6000	≤19	0.9	3.9
						C102_0155 ME20	3700			≤32	4.3	
						C102_0155 ME30	3500		5000	≤38	9.7	
17.73	195/11	120	138	240	15	C102_0175 ME10	3800	3500	6000	≤19	0.9	3.9
						C102_0175 ME20	3700			≤32	4.3	
						C102_0175 ME30	3500		5000	≤38	9.7	
25.13	377/15	120	138	240	15	C102_0250 ME10	4000	3900	6500	≤19	0.8	3.9
						C102_0250 ME20	3700	3700	6000	≤24	2.7	
28.36	312/11	120	138	240	15	C102_0280 ME10	4000	3900	6500	≤19	0.8	3.9
						C102_0280 ME20	3700	3700	6000	≤24	2.7	
31.07	435/14	120	138	240	15	C102_0310 ME10	4000	3900	6500	≤19	0.7	3.9
						C102_0310 ME20	3700	3700	6000	≤24	2.6	
35.07	2700/77	120	138	240	15	C102_0350 ME10	4000	3900	6500	≤19	0.7	3.9
						C102_0350 ME20	3700	3700	6000	≤24	2.6	
41.57	1247/30	120	138	240	15	C102_0420 ME10	4000	3900	6500	≤19	0.7	3.9
						C102_0420 ME20	3700	3700	6000	≤24	2.6	
46.91	516/11	120	138	240	15	C102_0470 ME10	4000	3900	6500	≤19	0.7	3.9
						C102_0470 ME20	3700	3700	6000	≤24	2.6	
111.1	1222/11	120	138	240	15	C103_1110 ME10	4000	3900	6500	≤19	0.7	3.9
137.3	10,575/77	120	138	240	15	C103_1370 ME10	4000	3900	6500	≤19	0.7	3.9
183.7	2021/11	120	138	240	15	C103_1840 ME10	4000	3900	6500	≤19	0.7	3.9

[1] *Maximum torque for continuous input 1500 RPM - horizontal output position.*
[2] *Maximum momentary torque for emergency stops or heavy shock load. (Admissible stops per life of gearhead = 1,000 stops maximum.)*
* *Motor shaft adapter code (shaft diameter max - mm): ME10 (19), ME20 (32), ME30 (38), ME40 (48), ME50 (60)*

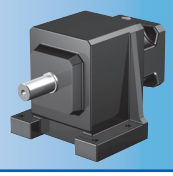

Selection Data

Reducer Ratio (i)		Output Torque			Backlash	Part Number	Max. Input Speed RPM (n1)			Motor Shaft Max Ø	Input Inertia	Tors. Stiffness
		Nom. [1] M_{2N}	Accel. M_{2acc}	Peak [2] M_{2NOT}	$\Delta\phi_2$		Continuous		Cyclic	d_{MW}	J_1	C_2
Nom.	Exact	Nm	Nm	Nm	arcmin	(Gearhead + Input)	EL 1,2,3,4	EL 5,6	All	mm	kgcm²	Nm/ arcmin
C2	**(continued next page)**											
2.475	99/40	114	144	180	17	C202_0025 ME20	3000	2600	4500	≤32	6.9	5.8
						C202_0025 ME30				≤38	12.0	5.9
2.690	495/184	117	157	196	17	C202_0027 ME20	3000	2600	4500	≤32	6.8	5.8
						C202_0027 ME30				≤38	12.0	5.9
3.888	486/125	78	91	113	17	C202_0039 ME10	3500	3100	5000	≤19	2.1	5.6
		132	198	283		C202_0039 ME20				≤32	5.5	5.9
						C202_0039 ME30				≤38	11.0	6.0
4.226	486/115	85	98	123	17	C202_0042 ME10	3500	3100	5000	≤19	2.1	5.7
		136	200	308		C202_0042 ME20				≤32	5.5	5.9
						C202_0042 ME30				≤38	11.0	6.0
4.667	14/3	81	109	136	17	C202_0047 ME10	3700	3500	5500	≤19	1.7	5.8
		140	200	339		C202_0047 ME20				≤32	5.1	6.0
						C202_0047 ME30	3500		5000	≤38	10.0	
5.072	350/69	88	118	148	17	C202_0051 ME10	3700	3500	5500	≤19	1.7	5.8
		144	200	350		C202_0051 ME20				≤32	5.1	6.0
						C202_0051 ME30	3500		5000	≤38	10.0	
5.791	666/115	86	135	169	17	C202_0058 ME10	3700	3500	5500	≤19	1.4	5.8
		151	200	350		C202_0058 ME20				≤32	4.8	6.0
						C202_0058 ME30	3500		5000	≤38	10.0	
6.295	3330/529	93	147	183	17	C202_0063 ME10	3700	3500	5500	≤19	1.4	5.9
		155	200	350		C202_0063 ME20				≤32	4.8	6.0
						C202_0063 ME30	3500		5000	≤38	10.0	
7.800	39/5	91	173	216	17	C202_0078 ME10	4000	3900	6500	≤19	1.1	5.9
		167	200	350		C202_0078 ME20	3700	3700	6000	≤32	4.5	6.0
						C202_0078 ME30	3500	3500	5000	≤38	9.9	
10.26	513/50	200	230	299	14	C202_0105 ME10	3500	3100	5000	≤19	1.8	8.2
				400		C202_0105 ME20				≤32	5.2	8.3
						C202_0105 ME30				≤38	10.0	
11.76	294/25	200	230	342	14	C202_0120 ME10	3500	3100	5000	≤19	1.7	8.2
				400		C202_0120 ME20				≤32	5.2	8.3
						C202_0120 ME30				≤38	10.0	

[1] Maximum torque for continuous input 1500 RPM - horizontal output position.
[2] Maximum momentary torque for emergency stops or heavy shock load. (Admissible stops per life of gearhead = 1,000 stops maximum.)
** Motor shaft adapter code (shaft diameter max - mm): ME10 (19), ME20 (32), ME30 (38), ME40 (48), ME50 (60)*

Reducer Ratio (i)		Output Torque			Backlash	Part Number	Max. Input Speed RPM (n1)			Motor Shaft Max Ø	Input Inertia	Tors. Stiffness
		Nom. [1] M_{2N}	Accel. M_{2acc}	Peak [2] M_{2NOT}	$\Delta\phi_2$		Continuous		Cyclic	d_{MW}	J_1	C_2
Nom.	Exact	Nm	Nm	Nm	arcmin	(Gearhead + Input)	EL 1,2,3,4	EL 5,6	All	mm	kgcm²	Nm/ arcmin
C2		**(continued next page)**										
12.32	665/54	200	230	359	14	C202_0125 ME10	3700	3500	5500	≤19	1.5	8.2
				400		C202_0125 ME20				≤32	4.9	8.3
						C202_0125 ME30	3500		5000	≤38	10.0	
14.12	3430/243	200	230	400	14	C202_0140 ME10	3700	3500	5500	≤19	1.5	8.2
						C202_0140 ME20				≤32	4.9	8.3
						C202_0140 ME30	3500		5000	≤38	10.0	
15.28	703/46	200	230	400	14	C202_0155 ME10	3700	3500	5500	≤19	1.3	8.2
						C202_0155 ME20				≤32	4.7	8.3
						C202_0155 ME30	3500		5000	≤38	10.0	
17.52	3626/207	200	230	400	14	C202_0175 ME10	3700	3500	5500	≤19	1.3	8.3
						C202_0175 ME20				≤32	4.7	
						C202_0175 ME30	3500		5000	≤38	10.0	
20.58	247/12	200	230	400	14	C202_0210 ME10	4000	3900	6500	≤19	1.1	8.3
						C202_0210 ME20	3700	3700	6000	≤32	4.5	
						C202_0210 ME30	3500	3500	5000	≤38	9.8	
23.59	637/27	200	230	400	14	C202_0240 ME10	4000	3900	6500	≤19	1.0	8.3
						C202_0240 ME20	3700	3700	6000	≤32	4.5	
						C202_0240 ME30	3500	3500	5000	≤38	9.8	
24.64	1577/64	200	230	400	14	C202_0250 ME10	4000	3900	6500	≤19	1.0	8.3
						C202_0250 ME20	3700	3700	6000	≤32	4.4	
						C202_0250 ME30	3500	3500	5000	≤38	9.7	
28.24	4067/144	200	230	400	14	C202_0280 ME10	4000	3900	6500	≤19	1.0	8.3
						C202_0280 ME20	3700	3700	6000	≤32	4.4	
						C202_0280 ME30	3500	3500	5000	≤38	9.7	
30.69	399/13	200	230	400	14	C202_0310 ME10	4000	3900	6500	≤19	0.9	8.3
						C202_0310 ME20	3700	3700	6000	≤24	2.8	
						C202_0310 ME30	3500	3500	5000	≤32	7.9	
35.18	1372/39	200	230	400	14	C202_0350 ME10	4000	3900	6500	≤19	0.9	8.3
						C202_0350 ME20	3700	3700	6000	≤24	2.8	
40.85	817/20	200	230	400	14	C202_0410 ME10	4000	3900	6500	≤19	0.8	8.3
						C202_0410 ME20	3700	3700	6000	≤24	2.7	
46.82	2107/45	200	230	400	14	C202_0470 ME10	4000	3900	6500	≤19	0.8	8.3
						C202_0470 ME20	3700	3700	6000	≤24	2.7	

[1] *Maximum torque for continuous input 1500 RPM - horizontal output position.*
[2] *Maximum momentary torque for emergency stops or heavy shock load. (Admissible stops per life of gearhead = 1,000 stops maximum.)*
* *Motor shaft adapter code (shaft diameter max - mm): ME10 (19), ME20 (32), ME30 (38), ME40 (48), ME50 (60)*

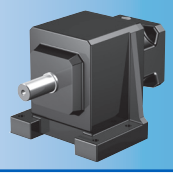

Selection Data

Reducer Ratio (i)		Output Torque			Backlash	Part Number	Max. Input Speed RPM (n1)			Motor Shaft Max Ø	Input Inertia	Tors. Stiffness
		Nom. [1]	Accel.	Peak [2]			Continuous		Cyclic			
		M_{2N}	M_{2acc}	M_{2NOT}	$\Delta\phi_2$					d_{MW}	J_1	C_2
Nom.	Exact	Nm	Nm	Nm	arcmin	(Gearhead + Input)	EL 1,2,3,4	EL 5,6	All	mm	kgcm²	Nm/ arcmin
C2		**(continued from previous page)**										
49.23	1083/22	200	230	400	14	C202_0490 ME10	4000	3900	6500	≤19	0.7	8.3
						C202_0490 ME20	3700	3700	6000	≤24	2.6	
56.42	1862/33	200	230	400	14	C202_0560 ME10	4000	3900	6500	≤19	0.7	8.3
						C202_0560 ME20	3700	3700	6000	≤24	2.6	
79.59	7163/90	200	230	400	14	C203_0800 ME20	3700	3700	6000	≤24	2.7	8.3
91.23	36,946/405	200	230	400	14	C203_0910 ME20	3700	3700	6000	≤24	2.7	8.3
109.2	117,943/1080	200	230	400	14	C203_1090 ME20	3700	3700	6000	≤24	2.7	8.3
136.0	79,576/585	200	230	400	14	C203_1360 ME20	3700	3700	6000	≤24	2.7	8.3
137.8	16,121/117	200	230	400	14	C203_1380 ME10	4000	3900	6500	≤19	0.7	8.3
181.0	122,206/675	200	230	400	14	C203_1810 ME20	3700	3700	6000	≤24	2.7	8.3
183.4	99,029/540	200	230	400	14	C203_1830 ME10	4000	3900	6500	≤19	0.7	8.3
221.0	43,757/198	200	230	400	14	C203_2210 ME10	4000	3900	6500	≤19	0.7	8.3
C3		**(continued next page)**										
2.510	1634/651	187	280	487	16	C302_0025 ME30	2700	2300	4000	≤38	15.0	7.0
						C302_0025 ME40				≤48	36.0	6.9
2.705	1677/620	192	287	525	16	C302_0027 ME30	2700	2300	4000	≤38	14.0	7.0
						C302_0027 ME40				≤48	36.0	
3.878	190/49	203	226	282	16	C302_0039 ME20	3200	2800	4800	≤32	6.6	6.9
		216	324	550		C302_0039 ME30				≤38	12.0	7.0
						C302_0039 ME40	3000		4500	≤48	34.0	
4.179	117/28	218	243	304	16	C302_0042 ME20	3200	2800	4800	≤32	6.6	7.0
		221	330	550		C302_0042 ME30				≤38	12.0	
						C302_0042 ME40	3000		4500	≤48	34.0	
4.675	589/126	210	272	340	16	C302_0047 ME20	3500	3100	5500	≤32	6.0	7.0
		230	330	550		C302_0047 ME30			5000	≤38	11.0	
						C302_0047 ME40	3000	3000	4500	≤48	33.0	
5.038	403/80	227	293	367	16	C302_0050 ME20	3500	3100	5500	≤32	6.0	7.0
		236	330	550		C302_0050 ME30			5000	≤38	11.0	
						C302_0050 ME40	3000	3000	4500	≤48	33.0	
5.859	2584/441	231	322	403	16	C302_0059 ME20	3500	3100	5500	≤32	5.4	7.0
		248	330	550		C302_0059 ME30			5000	≤38	11.0	
						C302_0059 ME40	3000	3000	4500	≤48	33.0	

[1] *Maximum torque for continuous input 1500 RPM - horizontal output position.*
[2] *Maximum momentary torque for emergency stops or heavy shock load. (Admissible stops per life of gearhead = 1,000 stops maximum.)*
* *Motor shaft adapter code (shaft diameter max - mm): ME10 (19), ME20 (32), ME30 (38), ME40 (48), ME50 (60)*

Reducer Ratio (i)		Output Torque			Backlash	Part Number	Max. Input Speed RPM (n1)			Motor Shaft Max Ø	Input Inertia	Tors. Stiffness
		Nom. [1] M_{2N}	Accel. M_{2acc}	Peak [2] M_{2NOT}	$\Delta\phi_2$		Continuous		Cyclic	d_{MW}	J_1	C_2
Nom.	Exact	Nm	Nm	Nm	arcmin	(Gearhead + Input)	EL 1,2,3,4	EL 5,6	All	mm	kgcm²	Nm/ arcmin
C3	**(continued next page)**											
6.314	221/35	249	330	434	16	C302_0063 ME20	3500	3100	5500	≤32	5.4	7.0
				550		C302_0063 ME30			5000	≤38	11.0	7.1
						C302_0063 ME40	3000	3000	4500	≤48	33.0	7.0
10.29	72/7	350	400	700	13	C302_0105 ME20	3200	2800	4800	≤32	6.0	8.7
						C302_0105 ME30				≤38	11.0	
						C302_0105 ME40	3000		4500	≤48	33.0	
11.61	325/28	350	350	700	13	C302_0115 ME20	3200	2800	4800	≤32	5.9	8.7
						C302_0115 ME30				≤38	11.0	
						C302_0115 ME40	3000		4500	≤48	33.0	
12.40	62/5	350	400	700	13	C302_0125 ME20	3500	3100	5500	≤32	5.6	8.7
						C302_0125 ME30			5000	≤38	11.0	
						C302_0125 ME40	3000	3000	4500	≤48	33.0	
13.99	2015/144	350	350	700	13	C302_0140 ME20	3500	3100	5500	≤32	5.5	8.7
						C302_0140 ME30			5000	≤38	11.0	
						C302_0140 ME40	3000	3000	4500	≤48	33.0	
15.54	544/35	350	400	700	13	C302_0155 ME20	3500	3100	5500	≤32	5.1	8.7
						C302_0155 ME30			5000	≤38	11.0	
						C302_0155 ME40	3000	3000	4500	≤48	33.0	
17.54	1105/63	350	350	700	13	C302_0175 ME20	3500	3100	5500	≤32	5.1	8.7
						C302_0175 ME30			5000	≤38	11.0	
						C302_0175 ME40	3000	3000	4500	≤48	32.0	
24.80	124/5	350	400	700	13	C302_0250 ME20	3700	3500	6000	≤32	4.6	8.7
						C302_0250 ME30	3500		5000	≤38	9.9	
27.99	2015/72	350	350	700	13	C302_0280 ME20	3700	3500	6000	≤32	4.6	8.7
						C302_0280 ME30	3500		5000	≤38	9.9	
31.04	776/25	350	400	700	13	C302_0310 ME20	3700	3500	6000	≤32	4.4	8.7
						C302_0310 ME30	3500		5000	≤38	9.7	
35.03	1261/36	350	350	700	13	C302_0350 ME20	3700	3500	6000	≤32	4.4	8.7
						C302_0350 ME30	3500		5000	≤38	9.7	
41.35	2688/65	350	400	700	13	C302_0410 ME20	3700	3500	6000	≤24	2.8	8.7
46.67	140/3	350	350	700	13	C302_0470 ME20	3700	3500	6000	≤24	2.8	8.7
49.75	2736/55	350	400	700	13	C302_0500 ME20	3700	3500	6000	≤24	2.7	8.7
56.14	1235/22	350	350	700	13	C302_0560 ME20	3700	3500	6000	≤24	2.7	8.7

[1] *Maximum torque for continuous input 1500 RPM - horizontal output position.*
[2] *Maximum momentary torque for emergency stops or heavy shock load. (Admissible stops per life of gearhead = 1,000 stops maximum.)*
* *Motor shaft adapter code (shaft diameter max - mm): ME10 (19), ME20 (32), ME30 (38), ME40 (48), ME50 (60)*

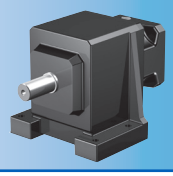

Selection Data

Reducer Ratio (i)		Output Torque			Backlash	Part Number	Max. Input Speed RPM (n1)			Motor Shaft Max Ø	Input Inertia	Tors. Stiffness
		Nom. [1]	Accel.	Peak [2]			Continuous		Cyclic			
		M_{2N}	M_{2acc}	M_{2NOT}	$\Delta\phi_2$					d_{MW}	J_1	C_2
Nom.	Exact	Nm	Nm	Nm	arcmin	(Gearhead + Input)	EL 1,2,3,4	EL 5,6	All	mm	kgcm²	Nm/ arcmin
C3		**(continued from previous page)**										
108.2	11,687/108	350	350	700	13	C303_1080 ME20	3700	3500	6000	≤24	2.7	8.7
135.4	36,569/270	350	350	700	13	C303_1350 ME20	3700	3500	6000	≤24	2.7	8.7
137.2	59,267/432	350	350	700	13	C303_1370 ME10	3800	3500	6000	≤19	0.7	8.7
180.4	1624/9	350	350	700	13	C303_1800 ME20	3700	3500	6000	≤24	2.7	8.7
182.8	1645/9	350	350	700	13	C303_1830 ME10	3800	3500	6000	≤19	0.7	8.7
217.1	7163/33	350	350	700	13	C303_2170 ME20	3700	3500	6000	≤24	2.7	8.7
219.9	58,045/264	350	350	700	13	C303_2200 ME10	3800	3500	6000	≤19	0.7	8.7
C4		**(continued next page)**										
1.968	551/280	251	306	382	15	C402_0020 ME30	2500	2100	3500	≤38	27.0	16.0
						C402_0020 ME40				≤48	48.0	
3.099	1537/496	292	437	599	15	C402_0031 ME30	2900	2500	4500	≤38	18.0	17.0
						C402_0031 ME40				≤48	40.0	
4.682	899/192	244	273	341	15	C402_0047 ME20	3300	2800	5000	≤32	8.6	17.0
		335	502	800		C402_0047 ME30				≤38	14.0	
						C402_0047 ME40	3000		4500	≤48	36.0	
7.816	2001/256	274	360	450	15	C402_0078 ME20	3500	3200	5500	≤32	6.1	17.0
		397	550	850		C402_0078 ME30			5000	≤38	12.0	
						C402_0078 ME40	3000	3000	4500	≤48	33.0	
8.285	3339/403	550	600	1100	12	C402_0083 ME30	2900	2500	4500	≤38	15.0	22.0
						C402_0083 ME40				≤48	37.0	
9.261	3445/372	550	550	1100	12	C402_0093 ME30	2900	2500	4500	≤38	15.0	22.0
						C402_0093 ME40				≤48	37.0	
12.52	651/52	550	600	911	12	C402_0125 ME20	3300	2800	5000	≤32	7.5	22.0
				1100		C402_0125 ME30				≤38	13.0	
						C402_0125 ME40	3000		4500	≤48	35.0	
13.99	2015/144	550	550	1018	12	C402_0140 ME20	3300	2800	5000	≤32	7.4	22.0
				1100		C402_0140 ME30				≤38	13.0	
						C402_0140 ME40	3000		4500	≤48	35.0	
20.90	4347/208	550	600	1100	12	C402_0210 ME20	3500	3200	5500	≤32	5.7	22.0
						C402_0210 ME30			5000	≤38	11.0	
						C402_0210 ME40	3000	3000	4500	≤48	33.0	
23.36	1495/64	550	550	1100	12	C402_0230 ME20	3500	3200	5500	≤32	5.7	22.0
						C402_0230 ME30			5000	≤38	11.0	
						C402_0230 ME40	3000	3000	4500	≤48	33.0	

[1] *Maximum torque for continuous input 1500 RPM - horizontal output position.*
[2] *Maximum momentary torque for emergency stops or heavy shock load. (Admissible stops per life of gearhead = 1,000 stops maximum.)*
* *Motor shaft adapter code (shaft diameter max - mm): ME10 (19), ME20 (32), ME30 (38), ME40 (48), ME50 (60)*

Reducer Ratio (i)		Output Torque			Backlash	Part Number	Max. Input Speed RPM (n1)			Motor Shaft Max Ø	Input Inertia	Tors. Stiffness
		Nom. [1] M_{2N}	Accel. M_{2acc}	Peak [2] M_{2NOT}	$\Delta\phi_2$		Continuous		Cyclic	d_{MW}	J_1	C_2
Nom.	Exact	Nm	Nm	Nm	arcmin	(Gearhead + Input)	EL 1,2,3,4	EL 5,6	All	mm	kgcm²	Nm/ arcmin
C4	**(continued from previous page)**											
24.92	324/13	550	600	1100	12	C402_0250 ME20	3500	3200	5500	≤32	5.3	22.0
						C402_0250 ME30			5000	≤38	11.0	
27.86	195/7	550	550	1100	12	C402_0280 ME20	3500	3200	5500	≤32	5.3	22.0
						C402_0280 ME30			5000	≤38	11.0	
41.75	7056/169	550	600	1100	12	C402_0420 ME20	3500	3200	5500	≤32	4.6	22.0
						C402_0420 ME30			5000	≤38	9.9	
46.67	140/3	550	550	1100	12	C402_0470 ME20	3500	3200	5500	≤32	4.6	22.0
						C402_0470 ME30			5000	≤38	9.9	
50.19	1305/26	550	600	917	12	C402_0500 ME20	3500	3200	5500	≤24	2.9	22.0
56.10	9425/168	550	550	1025	12	C402_0560 ME20	3500	3200	5500	≤24	2.9	22.0
80.81	42,021/520	550	600	1100	12	C403_0810 ME20	3500	3200	5500	≤24	2.8	22.0
90.32	8671/96	550	550	1100	12	C403_0900 ME20	3500	3200	5500	≤24	2.8	22.0
107.7	754/7	550	550	1100	12	C403_1080 ME20	3500	3200	5500	≤24	2.8	22.0
180.4	1624/9	550	550	1100	12	C403_1800 ME20	3500	3200	5500	≤24	2.7	22.0
216.9	54,665/252	550	550	1025	12	C403_2170 ME20	3500	3200	5500	≤24	2.7	22.0
C5	**(continued next page)**											
1.976	81/41	290	307	384	14	C502_0020 ME30	2400	2000	3200	≤38	40.0	20.0
		389	575	719		C502_0020 ME40				≤48	62.0	
						C502_0020 ME50				≤60	90.0	
3.077	477/155	350	478	597	14	C502_0031 ME30	2800	2400	4000	≤38	25.0	21.0
		451				C502_0031 ME40				≤48	47.0	20.0
						C502_0031 ME50	2500			≤60	76.0	21.0
4.629	162/35	269	269	337	14	C502_0046 ME20	3100	2700	4500	≤32	12.0	20.0
		404	704	881		C502_0046 ME30				≤38	18.0	21.0
		517				C502_0046 ME40	3000			≤48	40.0	
						C502_0046 ME50	2500	2500	4000	≤60	69.0	
7.763	621/80	320	396	496	14	C502_0078 ME20	3400	3000	5000	≤32	7.8	21.0
		464	800	1110		C502_0078 ME30				≤38	13.0	
		614				C502_0078 ME40	3000		4500	≤48	35.0	
						C502_0078 ME50	2500	2500	4000	≤60	64.0	
8.263	1537/186	800	920	1600	12	C502_0083 ME30	2800	2400	4000	≤38	20.0	23.0
						C502_0083 ME40				≤48	42.0	
						C502_0083 ME50	2500			≤60	71.0	

[1] *Maximum torque for continuous input 1500 RPM - horizontal output position.*
[2] *Maximum momentary torque for emergency stops or heavy shock load. (Admissible stops per life of gearhead = 1,000 stops maximum.)*
* *Motor shaft adapter code (shaft diameter max - mm): ME10 (19), ME20 (32), ME30 (38), ME40 (48), ME50 (60)*

Selection Data

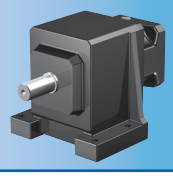

Reducer Ratio (i)		Output Torque			Backlash	Part Number (Gearhead + Input)	Max. Input Speed RPM (n1)			Motor Shaft Max Ø	Input Inertia	Tors. Stiffness
		Nom. [1] M_{2N}	Accel. M_{2acc}	Peak [2] M_{2NOT}	$\Delta\phi_2$		Continuous		Cyclic	d_{MW}	J_1	C_2
Nom.	Exact	Nm	Nm	Nm	arcmin		EL 1,2,3,4	EL 5,6	All	mm	kgcm²	Nm/ arcmin
C5	**(continued from previous page)**											
9.261	3445/372	800	850	1600	12	C502_0093 ME30	2800	2400	4000	≤38	20.0	23.0
						C502_0093 ME40				≤48	42.0	
						C502_0093 ME50	2500			≤60	71.0	
12.43	87/7	723	723	904	12	C502_0125 ME20	3100	2700	4500	≤32	10.0	23.0
		800	920	1600		C502_0125 ME30				≤38	16.0	
						C502_0125 ME40	3000			≤48	38.0	
						C502_0125 ME50	2500	2500	4000	≤60	67.0	
13.93	195/14	800	811	1013	12	C502_0140 ME20	3100	2700	4500	≤32	10.0	23.0
			850	1600		C502_0140 ME30				≤38	16.0	
						C502_0140 ME40	3000			≤48	37.0	
						C502_0140 ME50	2500	2500	4000	≤60	67.0	
20.84	667/32	800	920	1331	12	C502_0210 ME20	3400	3000	5000	≤32	7.1	23.0
				1600		C502_0210 ME30				≤38	13.0	
						C502_0210 ME40	3000		4500	≤48	34.0	
						C502_0210 ME50	2500	2500	4000	≤60	64.0	
23.36	1495/64	800	850	1491	12	C502_0230 ME20	3400	3000	5000	≤32	7.1	23.0
				1600		C502_0230 ME30				≤38	13.0	
						C502_0230 ME40	3000		4500	≤48	34.0	
						C502_0230 ME50	2500	2500	4000	≤60	63.0	
31.23	406/13	800	920	1524	12	C502_0310 ME20	3400	3000	5000	≤32	5.7	23.0
						C502_0310 ME30				≤38	11.0	
35.00	35/1	800	850	1600	12	C502_0350 ME20	3400	3000	5000	≤32	5.6	23.0
						C502_0350 ME30				≤38	11.0	
49.82	1943/39	800	920	1600	12	C502_0500 ME20	3400	3000	5000	≤32	4.8	23.0
						C502_0500 ME30				≤38	10.0	
55.83	335/6	800	850	1600	12	C502_0560 ME20	3400	3000	5000	≤32	4.8	23.0
						C502_0560 ME30				≤38	10.0	
80.60	19,343/240	800	920	1331	12	C503_0810 ME20	3400	3000	5000	≤24	2.9	23.0
90.32	8671/96	800	850	1491	12	C503_0900 ME20	3400	3000	5000	≤24	2.9	23.0
135.3	406/3	800	850	1600	12	C503_1350 ME20	3400	3000	5000	≤24	2.8	23.0
215.9	1943/9	800	850	1600	12	C503_2160 ME20	3400	3000	5000	≤24	2.7	23.0

[1] Maximum torque for continuous input 1500 RPM - horizontal output position.
[2] Maximum momentary torque for emergency stops or heavy shock load. (Admissible stops per life of gearhead = 1,000 stops maximum.)
** Motor shaft adapter code (shaft diameter max - mm): ME10 (19), ME20 (32), ME30 (38), ME40 (48), ME50 (60)*

Reducer Ratio (i)		Output Torque			Backlash	Part Number	Max. Input Speed RPM (n1)			Motor Shaft Max Ø	Input Inertia	Tors. Stiffness
		Nom. [1] M_{2N}	Accel. M_{2acc}	Peak [2] M_{2NOT}	$\Delta\phi_2$	(Gearhead + Input)	Continuous		Cyclic	d_{MW}	J_1	C_2
Nom.	Exact	Nm	Nm	Nm	arcmin		EL 1,2,3,4	EL 5,6	All	mm	kgcm²	Nm/ arcmin
C6		**(continued next page)**										
4.184	2745/656	930	1220	1520	10	C612_0042 ME40	2300	1900	3000	≤48	79.0	70.0
						C612_0042 ME50				≤60	107.0	72.0
5.854	240/41	1040	1380	2130	10	C612_0059 ME40	2300	1900	3000	≤48	74.0	72.0
						C612_0059 ME50				≤60	102.0	73.0
6.518	3233/496	829	1012	1265	10	C612_0065 ME30	2700	2300	3800	≤38	35.0	72.0
		1075	1612	2372		C612_0065 ME40				≤48	58.0	
						C612_0065 ME50	2500			≤60	86.0	73.0
9.118	848/93	1160	1380	1770	10	C612_0091 ME30	2700	2300	3800	≤38	33.0	73.0
		1202	1380	2600		C612_0091 ME40				≤48	56.0	
						C612_0091 ME50	2500			≤60	83.0	74.0
10.11	3721/368	965	1439	1799	10	C612_0100 ME30	3000	2600	4000	≤38	24.0	73.0
		1244	1650	2900		C612_0100 ME40				≤48	47.0	
						C612_0100 ME50	2500	2500		≤60	75.0	74.0
14.15	976/69	1300	1380	2516	10	C612_0140 ME30	3000	2600	4000	≤38	23.0	74.0
				2600		C612_0140 ME40				≤48	46.0	
						C612_0140 ME50	2500	2500		≤60	74.0	
16.20	1037/64	1086	1650	2296	10	C612_0160 ME30	3200	2900	4500	≤38	17.0	74.0
		1450		2900		C612_0160 ME40	3000			≤48	39.0	
						C612_0160 ME50	2500	2500	4000	≤60	67.0	
22.67	68/3	1300	1380	2600	10	C612_0230 ME30	3200	2900	4500	≤38	16.0	74.0
						C612_0230 ME40	3000			≤48	39.0	
						C612_0230 ME50	2500	2500	4000	≤60	67.0	
24.93	5185/208	1169	1650	2900	10	C612_0250 ME30	3200	2900	4500	≤38	13.0	74.0
		1450				C612_0250 ME40	3000			≤48	35.0	
						C612_0250 ME50	2500	2500	4000	≤60	64.0	
34.87	1360/39	1300	1380	2600	10	C612_0350 ME30	3200	2900	4500	≤38	13.0	74.0
						C612_0350 ME40	3000			≤48	35.0	
						C612_0350 ME50	2500	2500	4000	≤60	64.0	
39.40	1891/48	1221	1283	1603	10	C612_0390 ME30	3200	2900	4500	≤38	11.0	74.0
55.11	496/9	1300	1380	2243	10	C612_0550 ME30	3200	2900	4500	≤38	11.0	74.0
63.46	48,739/768	1450	1650	2296	10	C613_0630 ME30	3200	2900	4500	≤38	10.0	74.0
88.78	799/9	1300	1380	2600	10	C613_0890 ME30	3200	2900	4500	≤38	10.0	74.0
97.63	243,695/2496	1450	1650	2900	10	C613_0980 ME30	3200	2900	4500	≤38	10.0	74.0
134.8	15,776/117	1300	1376	1720	10	C613_1350 ME20	3200	2900	4500	≤24	2.9	74.0
136.6	15,980/117	1300	1380	2600	10	C613_1370 ME30	3200	2900	4500	≤38	10.0	74.0
213.1	28,768/135	1300	1380	2243	10	C613_2130 ME20	3200	2900	4500	≤24	2.8	74.0

[1] *Maximum torque for continuous input 1500 RPM - horizontal output position.*
[2] *Maximum momentary torque for emergency stops or heavy shock load. (Admissible stops per life of gearhead = 1,000 stops maximum.)*
* *Motor shaft adapter code (shaft diameter max - mm): ME10 (19), ME20 (32), ME30 (38), ME40 (48), ME50 (60)*

Selection Data

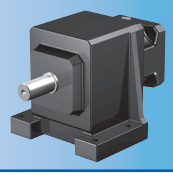

Reducer Ratio (i)		Output Torque			Backlash	Part Number	Max. Input Speed RPM (n1)			Motor Shaft Max Ø	Input Inertia	Tors. Stiffness
		Nom. [1] M_{2N}	Accel. M_{2acc}	Peak [2] M_{2NOT}	$\Delta\phi_2$		Continuous		Cyclic	d_{MW}	J_1	C_2
Nom.	Exact	Nm	Nm	Nm	arcmin	(Gearhead + Input)	EL 1,2,3,4	EL 5,6	All	mm	kgcm²	Nm/ arcmin
C7	**(continued next page)**											
4.259	477/112	1240	1240	1550	10	C712_0043 ME40	2200	1900	2800	≤48	128.0	112.0
						C712_0043 ME50				≤60	156.0	116.0
8.490	4347/512	1943	2471	3089	10	C712_0085 ME40	2600	2300	3500	≤48	70.0	119.0
						C712_0085 ME50	2500			≤60	98.0	120.0
11.76	1035/88	2000	2300	4000	10	C712_0120 ME40	2600	2300	3500	≤48	68.0	121.0
						C712_0120 ME50	2500			≤60	96.0	
13.18	4851/368	1250	1820	2275	10	C712_0130 ME30	2900	2600	4000	≤38	31.0	121.0
		2250	2760	4797		C712_0130 ME40				≤48	54.0	
						C712_0130 ME50	2500	2500		≤60	82.0	
18.26	420/23	1731	2300	3151	10	C712_0185 ME30	2900	2600	4000	≤38	30.0	122.0
		2000	2300	4000		C712_0185 ME40				≤48	53.0	
						C712_0185 ME50	2500	2500		≤60	81.0	
20.67	1323/64	1375	2257	2821	10	C712_0210 ME30	3100	2900	4500	≤38	20.0	122.0
		2400	2760	4800		C712_0210 ME40	3000			≤48	43.0	
						C712_0210 ME50	2500	2500	4000	≤60	71.0	
28.64	315/11	1905	2300	3908	10	C712_0290 ME30	3100	2900	4500	≤38	20.0	122.0
		2000		4000		C712_0290 ME40	3000			≤48	43.0	
						C712_0290 ME50	2500	2500	4000	≤60	70.0	
33.80	2163/64	1486	2760	3710	10	C712_0340 ME30	3100	2900	4500	≤38	14.0	122.0
		2400				C712_0340 ME40	3000			≤48	36.0	
						C712_0340 ME50	2500	2500	4000	≤60	65.0	
41.02	2625/64	1531	2514	4081	10	C712_0410 ME30	3100	2900	4500	≤38	13.0	122.0
		2095				C712_0410 ME40	3000			≤48	35.0	
						C712_0410 ME50	2500	2500	4000	≤60	64.0	
46.82	515/11	2000	2300	4000	10	C712_0470 ME30	3100	2900	4500	≤38	14.0	122.0
						C712_0470 ME40	3000			≤48	36.0	
						C712_0470 ME50	2500	2500	4000	≤60	65.0	
50.85	18,711/368	2400	2760	4797	10	C713_0510 ME40	3000	2900	4500	≤48	34.0	122.0
56.82	625/11	2000	2300	4000	10	C712_0570 ME30	3100	2900	4500	≤38	13.0	122.0
						C712_0570 ME40	3000			≤48	35.0	
						C712_0570 ME50	2500	2500	4000	≤60	64.0	
79.73	5103/64	2400	2760	4800	10	C713_0800 ME40	3000	2900	4500	≤48	34.0	122.0
80.97	20,727/256	2224	2257	2821	10	C713_0810 ME30	3100	2900	4500	≤38	11.0	122.0
110.5	1215/11	2000	2300	4000	10	C713_1100 ME40	3000	2900	4500	≤48	34.0	122.0
130.4	8343/64	2400	2760	3710	10	C713_1300 ME40	3000	2900	4500	≤48	33.0	122.0
132.4	33,887/256	2400	2760	3710	10	C713_1320 ME30	3100	2900	4500	≤38	10.0	122.0
180.6	13,905/77	2000	2300	4000	10	C713_1810 ME40	3000	2900	4500	≤48	33.0	122.0

[1] *Maximum torque for continuous input 1500 RPM - horizontal output position.*
[2] *Maximum momentary torque for emergency stops or heavy shock load. (Admissible stops per life of gearhead = 1,000 stops maximum.)*
* *Motor shaft adapter code (shaft diameter max - mm): ME10 (19), ME20 (32), ME30 (38), ME40 (48), ME50 (60)*

Reducer Ratio (i)		Output Torque			Backlash	Part Number	Max. Input Speed RPM (n1)			Motor Shaft Max Ø	Input Inertia	Tors. Stiffness
		Nom. [1] M_{2N}	Accel. M_{2acc}	Peak [2] M_{2NOT}	$\Delta\phi_2$		Continuous		Cyclic	d_{MW}	J_1	C_2
Nom.	Exact	Nm	Nm	Nm	arcmin	(Gearhead + Input)	EL 1,2,3,4	EL 5,6	All	mm	kgcm²	Nm/ arcmin
C7		**(continued from previous page)**										
183.4	24,205/132	2000	2300	4000	10	C713_1830 ME30	3100	2900	4500	≤38	10.0	122.0
219.2	16,875/77	2000	2300	4000	10	C713_2190 ME40	3000	2900	4500	≤48	33.0	122.0
222.5	29,375/132	2000	2300	4000	10	C713_2230 ME30	3100	2900	4500	≤38	10.0	122.0
C8		**(continued next page)**										
6.670	767/115	1942	1942	2427	10	C812_0067 ME40	2500	2200	3500	≤48	164.0	139.0
						C812_0067 ME50				≤60	192.0	142.0
9.043	208/23	2633	2633	3291	10	C812_0090 ME40	2500	2200	3500	≤48	153.0	197.0
						C812_0090 ME50				≤60	181.0	199.0
10.15	944/93	2677	2955	3693	10	C812_0100 ME40	2700	2400	3800	≤48	106.0	143.0
		2955				C812_0100 ME50	2500			≤60	134.0	144.0
12.75	5546/435	2537	3710	4638	10	C812_0125 ME40	2700	2400	3800	≤48	86.0	144.0
		3615				C812_0125 ME50	2500			≤60	114.0	
13.76	1280/93	3600	4006	5008	10	C812_0140 ME40	2700	2400	3800	≤48	101.0	201.0
						C812_0140 ME50	2500			≤60	129.0	202.0
17.10	1180/69	3037	4800	6222	10	C812_0170 ME40	2900	2700	4300	≤48	67.0	144.0
		3986				C812_0170 ME50	2500	2500	4000	≤60	95.0	145.0
17.29	1504/87	3600	4140	6289	10	C812_0175 ME40	2700	2400	3800	≤48	83.0	202.0
						C812_0175 ME50	2500			≤60	111.0	
20.26	6077/300	3137	4800	6759	10	C812_0200 ME40	2900	2700	4300	≤48	59.0	145.0
		4192				C812_0200 ME50	2500	2500	4000	≤60	87.0	
23.19	1600/69	3600	4140	7200	10	C812_0230 ME40	2900	2700	4300	≤48	66.0	203.0
						C812_0230 ME50	2500	2500	4000	≤60	94.0	
26.06	3127/120	3241	4800	7453	10	C812_0260 ME40	2900	2700	4300	≤48	50.0	145.0
		4200				C812_0260 ME50	2500	2500	4000	≤60	78.0	
27.47	412/15	3600	4140	7200	10	C812_0270 ME40	2900	2700	4300	≤48	58.0	203.0
						C812_0270 ME50	2500	2500	4000	≤60	86.0	
33.59	2183/65	3365	4800	8400	10	C812_0340 ME40	2900	2700	4300	≤48	44.0	145.0
		4200				C812_0340 ME50	2500	2500	4000	≤60	72.0	
35.33	106/3	3600	4140	7200	10	C812_0350 ME40	2900	2700	4300	≤48	50.0	203.0
						C812_0350 ME50	2500	2500	4000	≤60	78.0	
39.94	2596/65	3470	3686	4608	10	C812_0400 ME40	2900	2700	4300	≤48	40.0	145.0
		3686				C812_0400 ME50	2500	2500	4000	≤60	69.0	
45.54	592/13	3600	4140	7200	10	C812_0460 ME40	2900	2700	4300	≤48	44.0	203.0
						C812_0460 ME50	2500	2500	4000	≤60	72.0	
49.18	49,914/1015	3710	3710	4638	10	C813_0490 ME40	2900	2700	4300	≤48	37.0	203.0
54.15	704/13	3600	4140	6248	10	C812_0540 ME40	2900	2700	4300	≤48	40.0	203.0
						C812_0540 ME50	2500	2500	4000	≤60	69.0	

[1] *Maximum torque for continuous input 1500 RPM - horizontal output position.*
[2] *Maximum momentary torque for emergency stops or heavy shock load. (Admissible stops per life of gearhead = 1,000 stops maximum.)*
* *Motor shaft adapter code (shaft diameter max - mm): ME10 (19), ME20 (32), ME30 (38), ME40 (48), ME50 (60)*

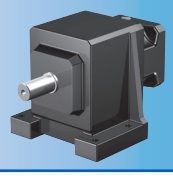

Selection Data

Reducer Ratio (i)		Output Torque			Backlash	Part Number	Max. Input Speed RPM (n1)			Motor Shaft Max Ø	Input Inertia	Tors. Stiffness
		Nom. [1]	Accel.	Peak [2]			Continuous		Cyclic			
		M_{2N}	M_{2acc}	M_{2NOT}	$\Delta\phi_2$					d_{MW}	J_1	C_2
Nom.	Exact	Nm	Nm	Nm	arcmin	(Gearhead + Input)	EL 1,2,3,4	EL 5,6	All	mm	kgcm²	Nm/ arcmin
C8	**(continued from previous page)**											
65.96	10,620/161	4188	4800	6222	10	C813_0660 ME40	2900	2700	4300	≤48	35.0	203.0
78.13	54,693/700	4200	4800	6759	10	C813_0780 ME40	2900	2700	4300	≤48	35.0	204.0
79.34	285,619/3600	2456	2486	3108	10	C813_0790 ME30	2900	2700	4300	≤38	12.0	203.0
89.44	14,400/161	3600	4140	7200	10	C813_0890 ME40	2900	2700	4300	≤48	35.0	204.0
90.82	18,800/207	2812	2846	3558	10	C813_0910 ME30	2900	2700	4300	≤38	12.0	204.0
100.5	28,143/280	4200	4800	7453	10	C813_1010 ME40	2900	2700	4300	≤48	34.0	204.0
105.9	3708/35	3600	4140	7200	10	C813_1060 ME40	2900	2700	4300	≤48	35.0	204.0
107.6	4841/45	3331	3371	4214	10	C813_1080 ME30	2900	2700	4300	≤38	12.0	204.0
129.5	58,941/455	4200	4800	8400	10	C813_1300 ME40	2900	2700	4300	≤48	34.0	204.0
136.3	954/7	3600	4140	7200	10	C813_1360 ME40	2900	2700	4300	≤48	34.0	204.0
138.4	2491/18	3600	3718	4648	10	C813_1380 ME30	2900	2700	4300	≤38	11.0	204.0
175.6	15,984/91	3600	4140	7200	10	C813_1760 ME40	2900	2700	4300	≤48	34.0	204.0
178.4	6956/39	3600	4140	5251	10	C813_1780 ME30	2900	2700	4300	≤38	11.0	204.0
208.9	19,008/91	3600	4140	6248	10	C813_2090 ME40	2900	2700	4300	≤48	34.0	204.0
212.1	8272/39	3600	4140	6248	10	C813_2120 ME30	2900	2700	4300	≤38	10.0	204.0
C9												
20.15	2257/112	4802	5630	7037	10	C912_0200 ME50	2500	2500	4000	≤60	120.0	260.0
28.63	2405/84	6000	6500	9997	10	C912_0290 ME50	2500	2500	4000	≤60	116.0	391.0
32.13	3599/112	5136	6758	8448	10	C912_0320 ME50	2500	2500	4000	≤60	88.0	261.0
39.30	4087/104	5195	7211	10378	10	C912_0390 ME50	2500	2500	4000	≤60	80.0	261.0
45.66	3835/84	6000	6500	12000	10	C912_0460 ME50	2500	2500	4000	≤60	87.0	392.0
55.83	335/6	6000	6500	12000	10	C912_0560 ME50	2500	2500	4000	≤60	79.0	392.0
64.59	295,545/4576	7000	8000	12779	10	C913_0650 ME50	2500	2500	4000	≤60	68.0	392.0
77.73	60,939/784	4988	5630	7037	10	C913_0780 ME40	2800	2600	4000	≤48	37.0	392.0
79.06	115,107/1456	7000	8000	14000	10	C913_0790 ME50	2500	2500	4000	≤60	67.0	392.0
91.76	8075/88	6000	6500	12000	10	C913_0920 ME50	2500	2500	4000	≤60	68.0	393.0
99.42	20,679/208	7000	8000	14000	10	C913_0990 ME50	2500	2500	4000	≤60	66.0	393.0
110.4	21,645/196	6000	6500	9997	10	C913_1100 ME40	2800	2600	4000	≤48	37.0	392.0
112.3	3145/28	6000	6500	12000	10	C913_1120 ME50	2500	2500	4000	≤60	67.0	393.0
126.1	183,549/1456	7000	8000	14000	10	C913_1260 ME50	2500	2500	4000	≤60	65.0	393.0
141.3	565/4	6000	6500	12000	10	C913_1410 ME50	2500	2500	4000	≤60	66.0	393.0
176.1	34,515/196	6000	6500	12000	10	C913_1760 ME40	2800	2600	4000	≤48	35.0	393.0
179.1	5015/28	6000	6500	12000	10	C913_1790 ME50	2500	2500	4000	≤60	65.0	393.0
215.4	3015/14	6000	6500	12000	10	C913_2150 ME40	2800	2600	4000	≤48	35.0	393.0

[1] Maximum torque for continuous input 1500 RPM - horizontal output position.
[2] Maximum momentary torque for emergency stops or heavy shock load. (Admissible stops per life of gearhead = 1,000 stops maximum.)
** Motor shaft adapter code (shaft diameter max - mm): ME10 (19), ME20 (32), ME30 (38), ME40 (48), ME50 (60)*

Notes

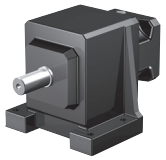

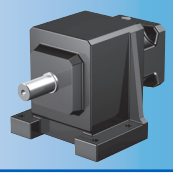

SMS Reducer Optional Output Flange
For "F" Round Output Flange Units Only
(Note: optional flanges are not available on all sizes)

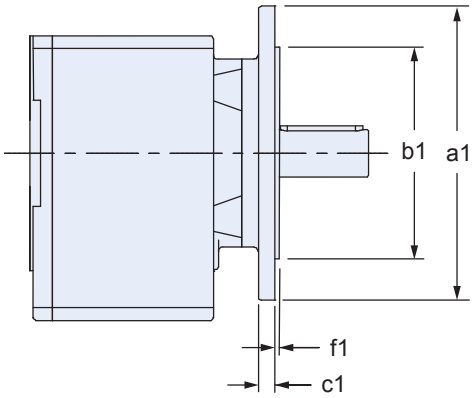

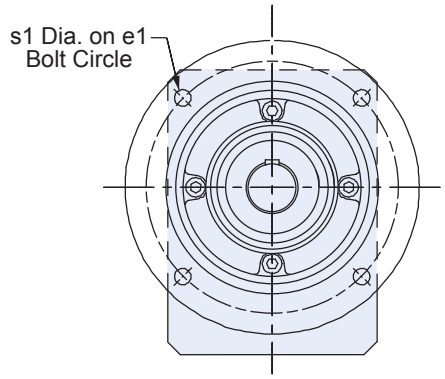

Table 1 Dimensions (mm)

Unit	Accommodate NEMA C-Frame Motors	Flange Size a1	b1 *	c1	e1	f1	s1
C0	050	120	80_{j6}	10	100	3	7
	140	140	95_{j6}	10	115	3	9
C1	050 140 180	140	95_{j6}	8	115	3.5	9
		160	110_{j6}	10	130	3.5	9
C2		160	110_{j6}	10	130	3.5	9
		250	180_{j6}	12	215	4	14
C3	050 140 180 210	160	110_{j6}	10	130	3.5	9
		200	130_{j6}	12	165	3.5	11
C4		200	130_{j6}	14	165	3.5	11
		300	230_{j6}	14	265	4	14
C5	180 210 250 280	250	180_{j6}	14	215	4	14
C8		350	250_{h6}	18	300	5	18
		450	350_{h6}	20	400	5	18

** h6, j6 = existing values*

Please contact STOBER for ordering assistance.

"F" Round Output Flange —

Optional SMS Reducer Output Flange available on most models, see page 93 for details.

C002F thru C503F

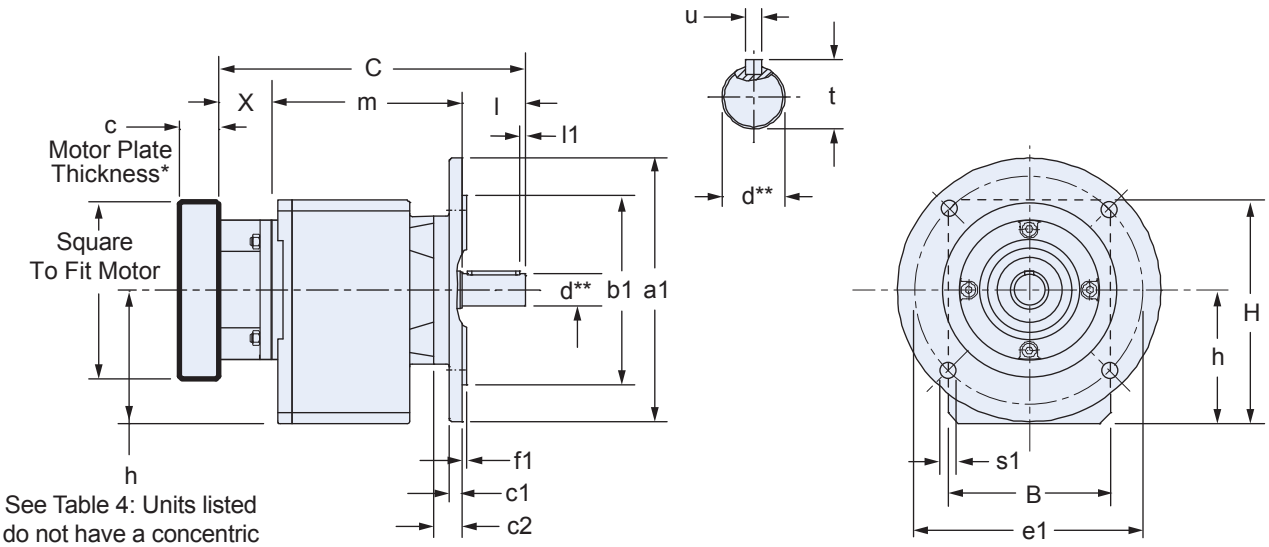

See Table 4: Units listed do not have a concentric input and output.

** See Motor Mounting Plate Option, page 76 for details.*
*** For optional output shaft options, see page 75.*

C612F thru C913F

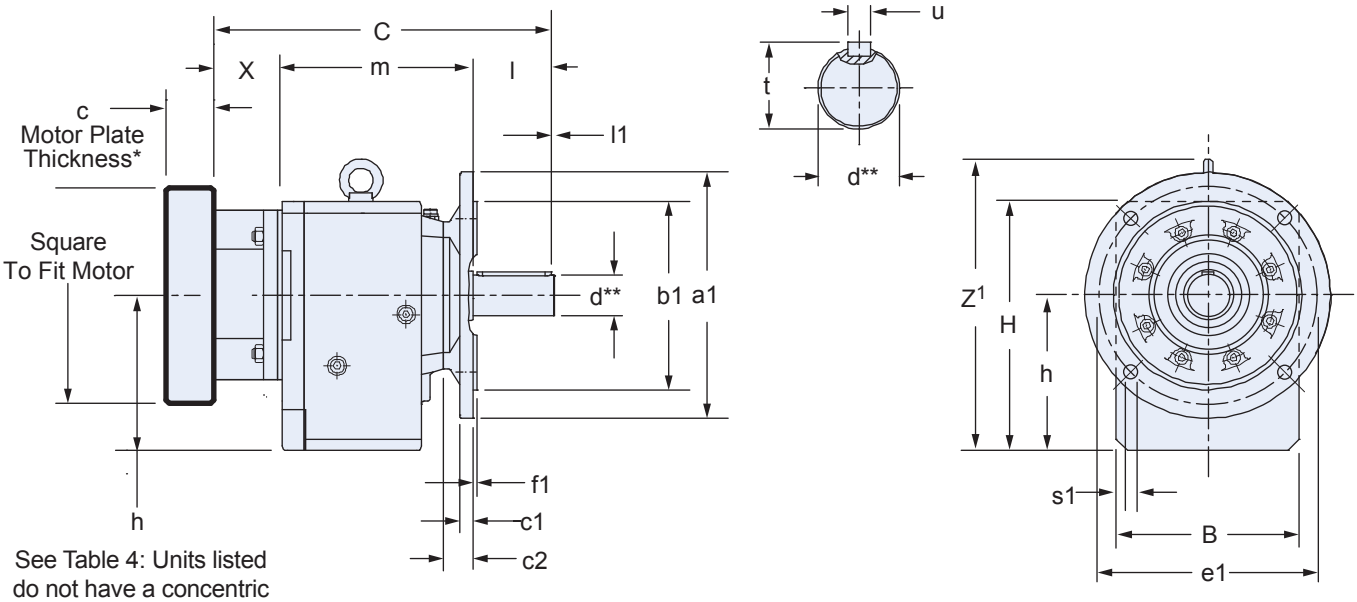

See Table 4: Units listed do not have a concentric input and output.

** See Motor Mounting Plate Option, page 76 for details.*
*** For optional output shaft options, see page 75.*

NOTE: Instead of 4 holes as shown in the drawing, the C912 and C913 output flange has 8 "J" dia. mounting holes on "F" bolt circle (located 22.5° from horizontal).

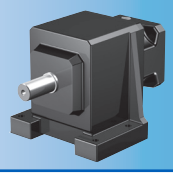

Dimensional Data

Table 1 Dimensions (mm)

Unit	a1	B	b1 *	c1	c2	e1	f1	H	h	l1	s1	Z[1]
C0	160	97	110_{j6}	10	18	130	3	141	79	3	9	–
C1	200	130	130_{j6}	12	21	165	3.5	175	100	5	11	–
C2	200	142	130_{j6}	12	27	165	3.5	192	112[1)]	5	11	–
C3	250	154	180_{j6}	12	27	215	4	212	127[1)]	5	14	–
C4	250	178	180_{j6}	14	28	215	4	242.5	142.5	5	14	–
C5	300	195	230_{j6}	16	29	265	4	286	166	5	14	–
C6	300	225	230_{j6}	17	36	265	4	310	195[1)]	5	14	362
C7	350	265	250_{h6}	18	44	300	5	371	231[1)]	5	18	432
C8	400	310	300_{h6}	20	45	350	5	445	285	5	18	506
C9	450	365	350_{h6}	23	50	400	5	524	334	5	18	594

[1)] Select units do not have a concentric input and output. See input dimension "h" for these units in Table 4.

Table 2 Metric output available on request.

	Standard Shaft - inches			Optional Shaft - mm		
Unit	d_{h6} *	t	u	d *	t	u
C0	0.750	0.83	3⁄16 x 3⁄16 x 1–7⁄32	20_{k6}	22.5	A6x6x32
C1	1.000	1.11	1/4 x 1/4 x 1–9/16	25_{k6}	28	A8x7x40
C2	1.250	1.36	1/4 x 1/4 x 1–15/16	30_{k6}	33	A8x7x50
C3	1.250	1.36	1/4 x 1/4 x 1–15/16	30_{k6}	33	A8x7x50
C4	1.625	1.79	3/8 x 3/8 x 2–7/8	40_{k6}	43	A12x8x70
C5	1.625	1.79	3/8 x 3/8 x 2–7/8	40_{k6}	43	A12x8x70
C6	2.125	2.35	1/2 x 1/2 x 3–5/32	50_{k6}	53.5	A14x9x90
C7	2.375	2.65	5/8 x 5/8 x 3–15/16	60_{m6}	64	A18x11x100
C8	2.875	3.21	3/4 x 3/4 x 4–5/16	70_{m6}	74.5	A20x12x125
C9	3.625	4.01	7/8 x 7/8 x 5–1/2	90_{m6}	95	A25x14x140

** h6, j6, k6, m6 = existing values*

Table 3 Motor Adapter Dimensions (mm)

Motor Adapter	Thickness c Min. [3)]	Motor Shaft d2 Max. [2)]	X	Wt. lbs.
ME10	21	19	40	5
ME20	24	32	50	8
ME30	25	38	60	15
ME40	33	48	88	28
ME50	43	60	81.5	42

[2)] If an adapter bushing is required it will be supplied as a component of the motor mounting plate.

[3)] Motor plate maximum thickness "c" will vary with motor shaft length but will not be less than shown.

For approximate weight, add adapter weight from Table 3 and base module weight from Table 4.

Table 4 Dimensions (mm)

	ME10				ME20				ME30				ME40				ME50				Approx.
Unit	C	h	l	m	C	h	l	m	C	h	l	m	C	h	l	m	C	h	l	m	Wt.(lbs.)
C002	194	—	40	114	208	—	40	118	—	—	—	—	—		—	—	—		—	—	18
C102	227	—	50	137	241	—	50	141	253	—	50	143	—	—	—	—	—	—	—	—	29
C103	264	—	50	174	—	—	—	—	—	—	—	—	—	—	—	—	—	—	—	—	34
C202	255	—	60	155	269	—	60	159	281	—	60	161	—	—	—	—	—	—	—	—	38
C203 [4)]	292	75.5	60	192	312	75.5	60	202	—	—	—	—	—	—	—	—	—	—	—	—	45
C302	—	—	—	—	288	—	60	178	300	—	60	180	331	—	60	183	—	—	—	—	49
C303 [4)]	311	90	60	211	331	90	60	221	—	—	—	—	—	—	—	—	—	—	—	—	56
C402	—	—	—	—	335.5	—	80	205.5	347.5	—	80	207.5	378.5	—	80	210.5	—	—	—	—	71
C403	—	—	—	—	378.5	—	80	248.5	—	—	—	—	—	—	—	—	—	—	—	—	78
C502	—	—	—	—	357	—	80	227	369	—	80	229	400	—	80	232	407.5	—	80	246	95
C503	—	—	—	—	400	—	80	270	—	—	—	—	—	—	—	—	—	—	—	—	111
C612 [4)]	—	—	—	—	—	—	—	—	393	189	100	233	424	189	100	236	430.5	189	100	249	115
C613 [4)]	—	—	—	—	425	—	100	275	455	—	100	295	—	189	—	—	—	—	—	—	159
C712	—	—	—	—	—	—	—	—	446	—	120	266	476	—	120	268	482.5	—	120	281	199
C713 [4)]	—	—	—	—	—	—	—	—	507	—	120	327	547	250	120	339	—	—	—	—	221
C812	—	—	—	—	—	—	—	—	—	—	—	—	543	—	140	315	549.5	—	140	328	322
C813	—	—	—	—	—	—	—	—	574	—	140	374	614	—	140	386	—	—	—	—	342
C912	—	—	—	—	—	—	—	—	—	—	—	—	—	—	—	—	616.5	—	170	365	596
C913	—	—	—	—	—	—	—	—	—	—	—	—	681	—	170	423	—	—	—	—	678

[4)] Select units do not have a concentric input and output dimension "h". Table 4 "h" values are for input side only on these select units. All concentric input and output units dimension "h" values are listed in Table 1 above.

"G" Pitch Circle Diameter (PCD) Tapped Holes —

C002G thru C503G

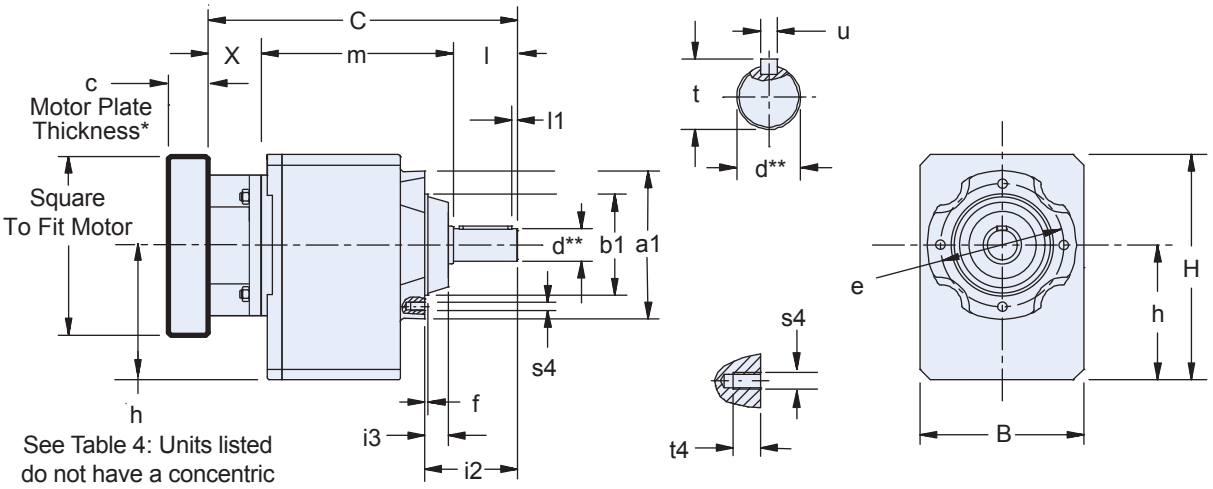

† NOTE: Instead of 4 holes as shown in the drawing, the C502/C503 has 8 holes located as shown on drawing for C612G – C913G.

** See Motor Mounting Plate Option, page 76 for details.*
*** For optional output shaft options, see page 75.*

C612G thru C913G

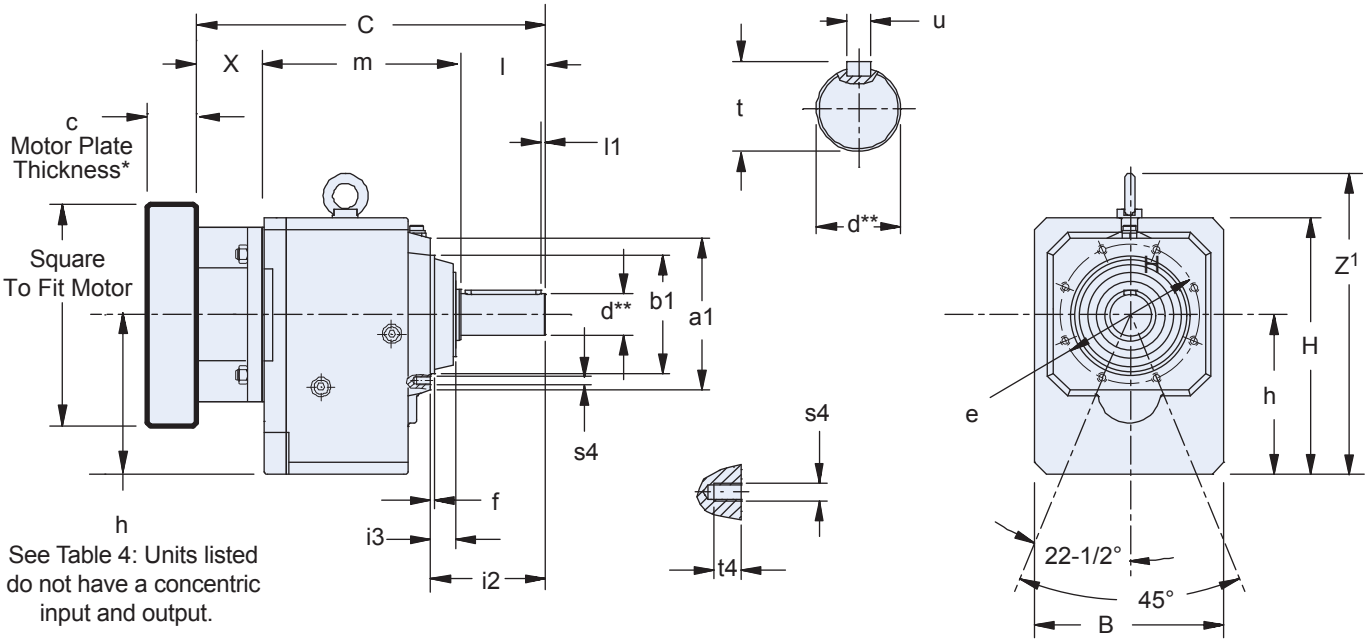

** See Motor Mounting Plate Option, page 76 for details.*
*** For optional output shaft options, see page 75.*

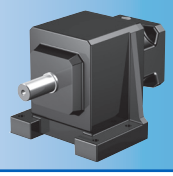

Dimensional Data

Table 1 Dimensions (mm)

Unit	a1	B	$b1_{j6}$	e	f	H	h	i2	i3	l1	s4	t4	Z^1
C0	87	97	55	75	3	141	79	58	14	3	M6x1	10	–
C1	120	130	80	100	3	175	100	71	17	5	M6x1	13	–
C2	140	142	95	115	3	192	112 [1)]	87	22	5	M8x1.25	13	–
C3	140	154	95	115	3	212	127 [1)]	87	22	5	M8x1.25	13	–
C4	160	178	110	130	3.5	242.5	142.5	108	22	5	M10x1.25	16	–
C5	192	195	130	165	3.5	286	166	109	23	5	M10x1.5†	16	–
C6	180	225	140	165	5	310	195 [1)]	136	30	5	M10x1.5	16	362
C7	195	265	155	185	8	371	231 [1)]	164	37	5	M12x1.75	19	432
C8	226	310	185	215	5	445	285	185	37	5	M12x1.75	19	506
C9	280	365	230	265	5	524	334	220	42	5	M16x2	26	594

[1)] Select units do not have a concentric input and output. See input dimension "h" for these units in Table 4.

Table 2 Metric output available on request.

	Standard Shaft - inches			Optional Shaft - mm		
Unit	d_{h6} *	t	u	d *	t	u
C0	0.750	0.83	3⁄16 x 3⁄16 x 1–7⁄32	20_{k6}	22.5	A6x6x32
C1	1.000	1.11	1/4 x 1/4 x 1–9/16	25_{k6}	28	A8x7x40
C2	1.250	1.36	1/4 x 1/4 x 1–15/16	30_{k6}	33	A8x7x50
C3	1.250	1.36	1/4 x 1/4 x 1–15/16	30_{k6}	33	A8x7x50
C4	1.625	1.79	3/8 x 3/8 x 2–7/8	40_{k6}	43	A12x8x70
C5	1.625	1.79	3/8 x 3/8 x 2–7/8	40_{k6}	43	A12x8x70
C6	2.125	2.35	1/2 x 1/2 x 3–5/32	50_{k6}	53.5	A14x9x90
C7	2.375	2.65	5/8 x 5/8 x 3–15/16	60_{m6}	64	A18x11x100
C8	2.875	3.21	3/4 x 3/4 x 4–5/16	70_{m6}	74.5	A20x12x125
C9	3.625	4.01	7/8 x 7/8 x 5–1/2	90_{m6}	95	A25x14x140

** h6, j6, k6, m6 = existing values*

Table 3 Motor Adapter Dimensions (mm)

Motor Adapter	Thickness c Min. [3)]	Motor Shaft d2 Max. [2)]	X	Wt. lbs.
ME10	21	19	40	5
ME20	24	32	50	8
ME30	26	38	60	15
ME40	35	48	88	28
ME50	43	60	81.5	42

[2)] If an adapter bushing is required it will be supplied as a component of the motor mounting plate.

[3)] Motor plate maximum thickness "c" will vary with motor shaft length but will not be less than shown.

For approximate weight, add adapter weight from Table 3 and base module weight from Table 4.

Table 4 Dimensions (mm)

	ME10				ME20				ME30				ME40				ME50				Approx.
Unit	C	h	l	m	C	h	l	m	C	h	l	m	C	h	l	m	C	h	l	m	Wt.(lbs.)
C002	194	—	40	114	208	—	40	118	—	—	—	—	—		—	—	—		—	—	18
C102	227	—	50	137	241	—	50	141	253	—	50	143	—	—	—	—	—	—	—	—	29
C103	264	—	50	174	—	—	—	—	—	—	—	—	—	—	—	—	—	—	—	—	34
C202	255	—	60	155	269	—	60	159	281	—	60	161	—	—	—	—	—	—	—	—	38
C203 [4)]	292	75.5	60	192	312	75.5	60	202	—	—	—	—	—	—	—	—	—	—	—	—	45
C302	—	—	—	—	288	—	60	178	300	—	60	180	331	—	60	183	—	—	—	—	49
C303 [4)]	311	90	60	211	331	90	60	221	—	—	—	—	—	—	—	—	—	—	—	—	56
C402	—	—	—	—	335.5	—	80	205.5	347.5	—	80	207.5	378.5	—	80	210.5	—	—	—	—	71
C403	—	—	—	—	378.5	—	80	248.5	—	—	—	—	—	—	—	—	—	—	—	—	78
C502	—	—	—	—	357	—	80	227	369	—	80	229	400	—	80	232	407.5	—	80	246	95
C503	—	—	—	—	400	—	80	270	—	—	—	—	—	—	—	—	—	—	—	—	111
C612 [4)]	—	—	—	—	—	—	—	—	393	189	100	233	424	189	100	236	430.5	189	100	249	115
C613 [4)]	—	—	—	—	425	—	100	275	455	—	100	295	—	189	—	—	—	—	—	—	159
C712	—	—	—	—	—	—	—	—	446	—	120	266	476	—	120	268	482.5	—	120	281	199
C713 [4)]	—	—	—	—	—	—	—	—	507	—	120	327	547	250	120	339	—	—	—	—	221
C812	—	—	—	—	—	—	—	—	—	—	—	—	543	—	140	315	549.5	—	140	328	322
C813	—	—	—	—	—	—	—	—	574	—	140	374	614	—	140	386	—	—	—	—	342
C912	—	—	—	—	—	—	—	—	—	—	—	—	—	—	—	—	616.5	—	170	365	596
C913	—	—	—	—	—	—	—	—	—	—	—	—	681	—	170	423	—	—	—	—	678

[4)] Select units do not have a concentric input and output dimension "h". Table 4 "h" values are for input side only on these select units. All concentric input and output units dimension "h" values are listed in Table 1 above.

"N" Foot Mount —

C002N thru C503N

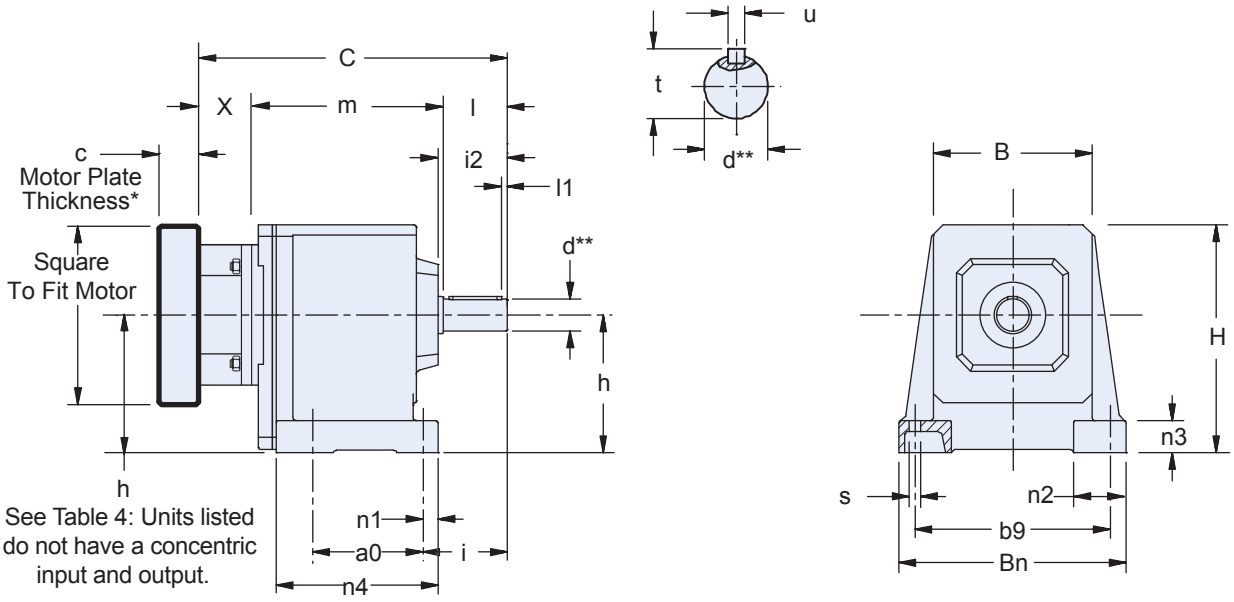

** See Motor Mounting Plate Option, page 76 for details.*
*** For optional output shaft options, see page 75.*

C612N thru C913N

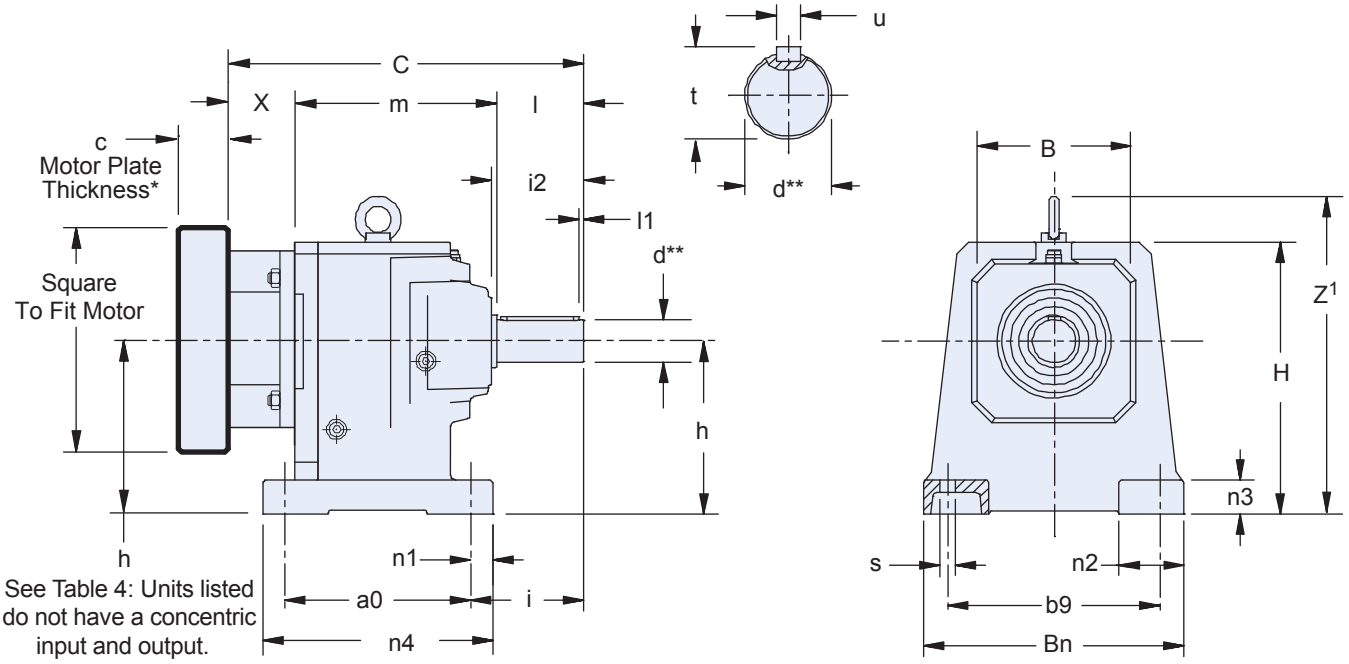

** See Motor Mounting Plate Option, page 76 for details.*
*** For optional output shaft options, see page 75.*

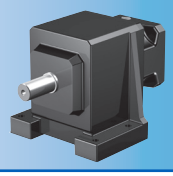

Dimensional Data

Table 1 Dimensions (mm)

Unit	a0	B	Bn	b9	H	h	i	i2	l1	n1	n2	n3	n4	s	Z[1]
C0	62	92	132	110	144	82	55	44	3	11	35	20	95	7	—
C1	70	124	176	150	177	102	67	54	5	13	42	25	118	9	—
C2	85	138	200	170	195	115[1)]	79	65	5	14	50	30	135	11	—
C3	105	150	215	185	215	130[1)]	79	65	5	14	50	30	154	11	—
C4	110	175	255	220	245	145	105	86	5	19	60	35	180	14	—
C5	130	192	290	245	290	170	108	86	5	22	70	40	197	18	—
C6	215	225	300	245	315	200[1)]	130	106	5	25	75	40	265	18	367
C7	235	265	365	300	375	235[1)]	163	127	5	25	90	50	285	18	436
C8	300	310	435	340	450	290	190	148	5	29	95	55	360	22	511
C9	340	365	510	400	530	340	222	178	5	34	110	60	410	26	600

[1)] Select units do not have a concentric input and output. See input dimension "h" for these units in Table 4.

Table 2 Metric output available on request.

	Standard Shaft - inches			Optional Shaft - mm		
Unit	d_{h6} *	t	u	d *	t	u
C0	0.750	0.83	3⁄16 x 3⁄16 x 1–7⁄32	20_{k6}	22.5	A6x6x32
C1	1.000	1.11	1/4 x 1/4 x 1–9/16	25_{k6}	28	A8x7x40
C2	1.250	1.36	1/4 x 1/4 x 1–15/16	30_{k6}	33	A8x7x50
C3	1.250	1.36	1/4 x 1/4 x 1–15/16	30_{k6}	33	A8x7x50
C4	1.625	1.79	3/8 x 3/8 x 2–7/8	40_{k6}	43	A12x8x70
C5	1.625	1.79	3/8 x 3/8 x 2–7/8	40_{k6}	43	A12x8x70
C6	2.125	2.35	1/2 x 1/2 x 3–5/32	50_{k6}	53.5	A14x9x90
C7	2.375	2.65	5/8 x 5/8 x 3–15/16	60_{m6}	64	A18x11x100
C8	2.875	3.21	3/4 x 3/4 x 4–5/16	70_{m6}	74.5	A20x12x125
C9	3.625	4.01	7/8 x 7/8 x 5–1/2	90_{m6}	95	A25x14x140

** h6, j6, k6, m6 = existing values*

Table 3 Motor Adapter Dimensions (mm)

Motor Adapter	Thickness c Min. [3)]	Motor Shaft d2 Max. [2)]	X	Wt. lbs.
ME10	21	19	40	5
ME20	24	32	50	8
ME30	25	38	60	15
ME40	33	48	88	28
ME50	43	60	81.5	42

[2)] If an adapter bushing is required it will be supplied as a component of the motor mounting plate.

[3)] Motor plate maximum thickness "c" will vary with motor shaft length but will not be less than shown.

For approximate weight, add adapter weight from Table 3 and base module weight from Table 4.

Table 4 Dimensions (mm)

	ME10				ME20				ME30				ME40				ME50				Approx.
Unit	C	h	l	m	C	h	l	m	C	h	l	m	C	h	l	m	C	h	l	m	Wt.(lbs.)
C002	194	—	40	114	208	—	40	118	—	—	—	—	—		—	—	—		—	—	18
C102	227	—	50	137	241	—	50	141	253	—	50	143	—	—	—	—	—	—	—	—	29
C103	264	—	50	174	—	—	—	—	—	—	—	—	—	—	—	—	—	—	—	—	34
C202	255	—	60	155	269	—	60	159	281	—	60	161	—	—	—	—	—	—	—	—	38
C203 [4)]	292	75.5	60	192	312	75.5	60	202	—	—	—	—	—	—	—	—	—	—	—	—	45
C302	—	—	—	—	288	—	60	178	300	—	60	180	331	—	60	183	—	—	—	—	49
C303 [4)]	311	90	60	211	331	90	60	221	—	—	—	—	—	—	—	—	—	—	—	—	56
C402	—	—	—	—	335.5	—	80	205.5	347.5	—	80	207.5	378.5	—	80	210.5	—	—	—	—	71
C403	—	—	—	—	378.5	—	80	248.5	—	—	—	—	—	—	—	—	—	—	—	—	78
C502	—	—	—	—	357	—	80	227	369	—	80	229	400	—	80	232	407.5	—	80	246	95
C503	—	—	—	—	400	—	80	270	—	—	—	—	—	—	—	—	—	—	—	—	111
C612 [4)]	—	—	—	—	—	—	—	—	393	189	100	233	424	189	100	236	430.5	189	100	249	115
C613 [4)]	—	—	—	—	425	—	100	275	455	—	100	295	—	189	—	—	—	—	—	—	159
C712	—	—	—	—	—	—	—	—	446	—	120	266	476	—	120	268	482.5	—	120	281	199
C713 [4)]	—	—	—	—	—	—	—	—	507	—	120	327	547	250	120	339	—	—	—	—	221
C812	—	—	—	—	—	—	—	—	—	—	—	—	543	—	140	315	549.5	—	140	328	322
C813	—	—	—	—	—	—	—	—	574	—	140	374	614	—	140	386	—	—	—	—	342
C912	—	—	—	—	—	—	—	—	—	—	—	—	—	—	—	—	616.5	—	170	365	596
C913	—	—	—	—	—	—	—	—	—	—	—	—	681	—	170	423	—	—	—	—	678

[4)] Select units do not have a concentric input and output dimension "h". Table 4 "h" values are for input side only on these select units. All concentric input and output units dimension "h" values are listed in Table 1 above.

"Q" Square Output Flange —

C002Q thru C403Q Only

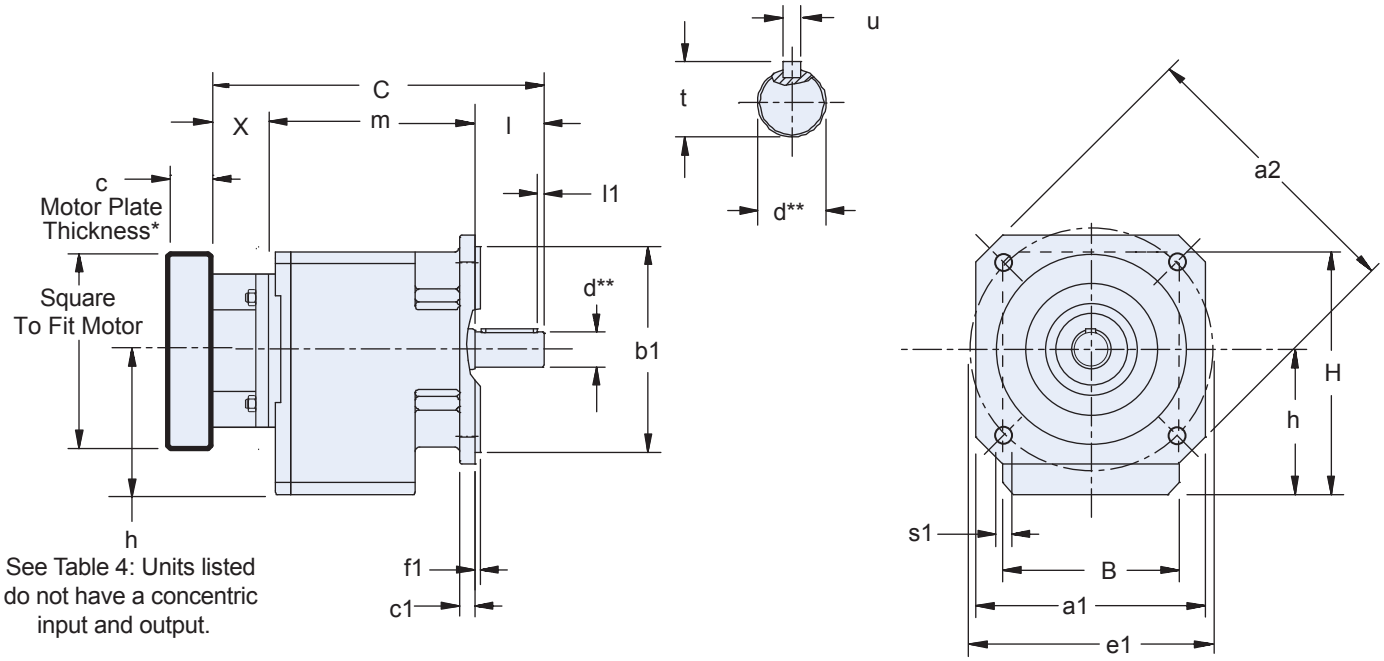

** See Motor Mounting Plate Option, page 76 for details.*
*** For optional output shaft options, see page 75.*

Contact STOBER for availability.

Dimensional Data

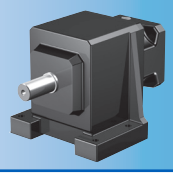

Table 1 Dimensions (mm)

Unit	a1	a2	B	$b1_{j6}$ *	c1	e1	f1	H	h	l1	s1
C0	124	160	97	110	9	130	3	141	79	3	9
C1	145	192	130	130	11	165	3.5	175	100	5	11
C2	145	192	142	130	11	165	3.5	192	112 [1)]	5	11
C3	200	250	154	180	14	215	4	212	127 [1)]	5	14
C4	200	250	178	180	14	215	4	242.5	142.5	5	14

[1)] Select units do not have a concentric input and output. See input dimension "h" for these units in Table 4.

Table 2 Metric output available on request.

	Standard Shaft - inches			Optional Shaft - mm		
Unit	d_{h6} *	t	u	d_{k6} *	T	u
C0	0.750	0.83	3⁄16 x 3⁄16 x 1–7⁄32	20	22.5	A6x6x32
C1	1.000	1.11	1/4 x 1/4 x 1–9/16	25	28	A8x7x40
C2	1.250	1.36	1/4 x 1/4 x 1–15/16	30	33	A8x7x50
C3	1.250	1.36	1/4 x 1/4 x 1–15/16	30	33	A8x7x50
C4	1.625	1.79	3/8 x 3/8 x 2–7/8	40	43	A12x8x70

Table 3 Motor Adapter Dimensions (mm)

Motor Adapter	Thickness c Min. [3)]	Motor Shaft d2 Max. [2)]	X	Wt. (lbs.)
ME10	21	19	40	5
ME20	24	32	50	8
ME30	25	38	60	15
ME40	33	48	88	28

[2)] If an adapter bushing is required it will be supplied as a component of the motor mounting plate.

[3)] Motor plate maximum thickness "c" will vary with motor shaft length but will not be less than shown.

** h6, j6, k6 = existing values*

For approximate weight, add adapter weight from Table 3 and base module weight from Table 4.

Table 4 Dimensions (mm)

	ME10				ME20				ME30			ME40			Approx.
Unit	C	h	l	m	C	h	l	m	C	l	m	C	l	m	Wt.(lbs.)
C002	194	—	40	114	208	—	40	118	—	—	—	—	—	—	18
C102	227	—	50	137	241	—	50	141	253	50	143	—	—	—	29
C103	264	—	50	174	—	—	—	—	—	—	—	—	—	—	34
C202	255	—	60	155	269	—	60	159	281	60	161	—	—	—	38
C203 [4)]	292	75.5	60	192	312	75.5	60	202	—	—	—	—	—	—	45
C302	—	—	—	—	288	—	60	178	300	60	180	331	60	183	49
C303 [4)]	311	90	60	211	331	90	60	221	—	—	—	—	—	—	56
C402	—	—	—	—	335.5	—	80	205.5	347.5	80	207.5	378.5	80	210.5	71
C403	—	—	—	—	378.5	—	80	248.5	—	—	—	—	—	—	78

[4)] Select units do not have a concentric input and output dimension "h". Table 4 "h" values are for input side only on these select units. All concentric input and output units dimension "h" values are listed in Table 1 above.

F Series: OFFSET – Versatile Outputs

F Features

- 4.3:1 to 552:1 ratios (higher ratios available. Contact STOBER.)
- Quiet running (<53dB(A))
- Reduced backlash option for increased precision
- Mounting flexibility to fit the application
- Adaptability: shafts available in metric or imperial, carbon or stainless steel to meet your requirements
- Optional food and corrosion resistant package
- Dual seals for extreme duty applications
- Error free motor mounting and quick changeover with toleranced pilot on motor plate
- Magnetic oil filtration to remove contaminants to prevent breakdowns
- Build and ship in one day
- Assembled in the USA

Compact size and flexibility make F Series gear drives a popular choice for applications that require high performance, efficiency, and durability. F Series gear drives are available with a wide selection of configurations to match almost any mounting requirement. Every gearbox is made to order. STOBER will custom whatever you need to fit your application. Contact us today to learn more.

SHIPS in 1 DAY!
NO EXPEDITE FEE FOR 24 HOUR SERVICE

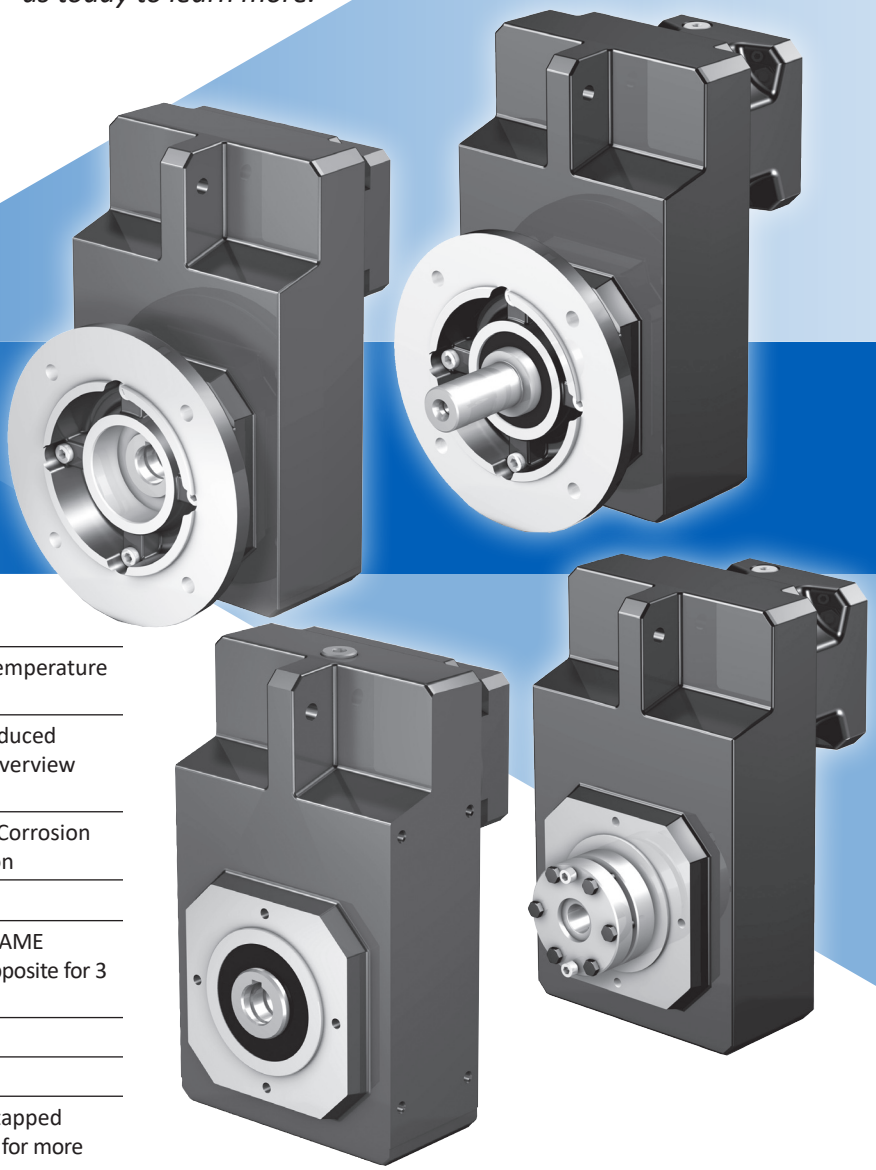

General Specifications

Ambient Temperature	0°C to +40°C (104°F) [Unit temperature <80°C Max]
Backlash	≤10 standard arcmins, ≤6 reduced arcmins (see performance overview chart, (page 104)
Coating	Standard Black (RAL-9005), Corrosion Resistant option, Food option
Degree of Protection	IP65
Direction of Rotation	Input and output rotate the SAME direction got 2 stage units, opposite for 3 stage units (see page 104)
Efficiency	2 stage 97%; 3 stage 96%
Input RPM	Up to 6,000 RPM
Installation	Requires 10.9 fasteners for tapped holes housing. See page 288 for more information
Lubrication	Lubricated for life - standard Mobil 600XP200, option food grade Mobil SHC CIBUS 220
Mounting Position	Must be specified, see page 104
Warranty	5 Year Limited (2 Years on normal wear items: bearings, seals, etc.)

Benefits of NEW ME Motor Adapters

- Higher torques
- Higher input speeds
- More compact with square coupling housing
- More clamp ring options, so less need for adapter bushings
- Clamp ring with roll pin

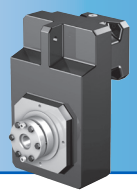

Overview

Selection Options *At-a-Glance*

Using the **Selection Data** table later in this section, select the F Series Gearhead with the appropriate performance and design options tailored to your motor choice and exact application requirements. Use the part number guide below as a reference to build a part number for the complete gearhead assembly.

Part Number Examples:

1	2	3	4	5	6	7	8	9	
F	1	0	2	V	F	0043	ME10	B	EL1 *

	Design Option	Part Number Code	Description
1	**Series**	F	Offset inline helical
2	**Size**	1 2 3 4 6	5 sizes of gearhead
3	**Generation**	0	Version of gearhead
4	**# of Stages**	2	Two stage for ratios <150:1
		3	Three stage >150:1
5	**Output**	 V	Shaft output (only available with housing option "F"; not available with food or corrosion resistant duty)
		 A	Hollow output (available imperial or metric, stainless steel)
		 W	Single or double wobble-free bushing (If single, specify side 5 or 6 only)
		 S	Shrink ring
6	**Housing**	 F	Round output flange
		 G	Pitch Circle Diameter (PCD) tapped holes
		 NG	Foot mounting (with tapped holes for side mounting)
7	**Ratio**	0043	Ratios range from 4.3:1 to 552:1 (0043=4.3:1; 0063=6.3:1; 5520=520:1)
8	**Motor Adapter**	ME10 – ME40	4 input sizes (see also motor mounting plate option)
9	**Options**	B	Add when ordering Corrosion Resistant Duty
		F	Add when ordering Food Duty
*	**Mounting Position**	EL1 EL2 EL3 EL4 EL5 EL6	Required special instruction for all units, see page 104

Options

ME Adapter Option

- MSS1 Seal – special input seal for longer life. Contact factory for this option.
- Peak Torque Booster – pinion securing element for shock loads, increasing peak torque up to 80%.

Lubrication Options

- Food grade or synthetic optionally available. Contact factory for this option.

Integrated Safety Brake

- ServoStop – provides dynamic braking during power failures or emergency stops in hazardous situations. Contact factory for this option.

Coating Option

- Corrosion Resistant Duty (**B** special option)
- Food Duty (**F** special option)

Food and Corrosion Resistant units are lubricated for life with double output seals (where possible), stainless output shaft, bore, or bushing, and heat cured paint.

ATEX

- ATmosphere EXplosible – rated for explosive environments. Contact factory for this option and allow additional time for delivery.

F Series Performance Overview

F Series performance is dependent on several factors including duty cycle, bearing design, gearhead size and stage configuration, among others. Use the chart below for preliminary evaluation, then use the following performance chart and selection information on the following pages for specific performance sizing and selection.

Size/Generation			F10	F20		F30		F40		F60	
# of Stages			2	2	3	2	3	2	3	2	3
Acceleration Torque M_{2BMAX}		Nm	120	270		450		700		1100	
Output Torque Nom. M_{2N}		Nm	120	240		400		700		1100	
Torsional Stiffness C_2		Nm/arcmin	<7.7	<17.9	<17.9	<21.8	<21.8	<38.7	<38.7	<77.4	<77.4
Torsional Backlash [1] $\Delta\phi$	arcmin	Standard	≤11	≤11	≤11	≤11	≤11	≤10	≤10	≤10	≤10
		Reduced	≤6	≤6	≤7	≤6	≤7	≤5	≤6	≤5	≤6
Input Speed Max. n_{1MAX}	Continuous	EL1,2,3,4	4000	4000	4000	4000	4000	3700	3800	3500	3500
		EL5,6	4000	3900	3900	3900	3900	3500	3500	3200	3200
	Cyclic		7000	6500	6500	6500	6500	6000	6000	5500	5500
Efficiency (@nom torque)		%	97	97	96	97	96	97	96	97	96
Weight		kg	17.2	23.1	29.0	30.4	33.1	38.1	41.2	74.7	80.2
		lbs	38	51	64	67	73	84	91	165	177
Noise [2]		dB(A)	≤55	≤53		≤53		≤53		≤61	
Size/Generation/# of Stage			F102	F202/F203		F302/F303		F402/F403		F602/F603	
Axial Load Max. [3] F_{2AMAX}	Solid Shaft	N	1100	1400		1900		2350		3100	
		lbs	247	351		427		528		697	
	Hollow Bore	N	900	1200		1350		1900		2200	
		lbs	203	270		304		428		495	
Tilting Moment Max.[3] M_{2KMAX}	Solid Shaft	Nm	260	400		600		800		1200	
		in.lbs	2301	3540		5310		7080		10,620	
	Hollow Bore	Nm	175	250		375		550		800	
		in.lbs	1549	2213		3319		4858		7080	

[1] *Tested at 1.5% of nominal torque and recorded on the output side of the gearhead. For lower backlash, contact STOBER technical support.*

[2] *Measurement at one (1) meter distance with input speed (n_1) of 2000 RPM. To calculate torque at higher input speeds, contact the factory.*

[3] *Rating based on output speed (n_2) of 20 RPM. For values at other speeds see page 107*

F Series Direction of Rotation

2 Stage Units		3 Stage Units	
F102	F402	F203	F403
F202	F602	F303	F603
F302			

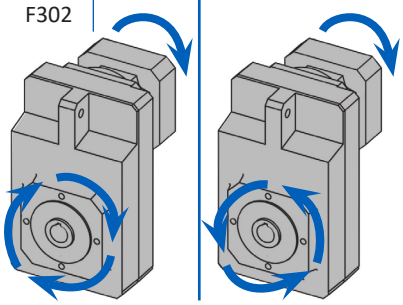

F Series Mounting Position Options

When ordering, the Mounting Position MUST BE SPECIFIED using one of the Mounting Position order codes below.

Note: the code relates to the unit's orientation side that faces down. For example, EL1 has side 1 facing down, EL2 has side 2 facing down, etc.

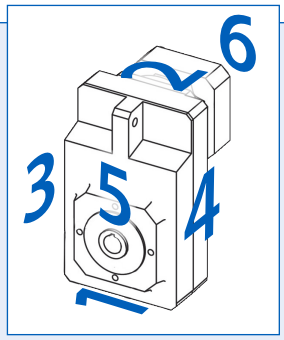

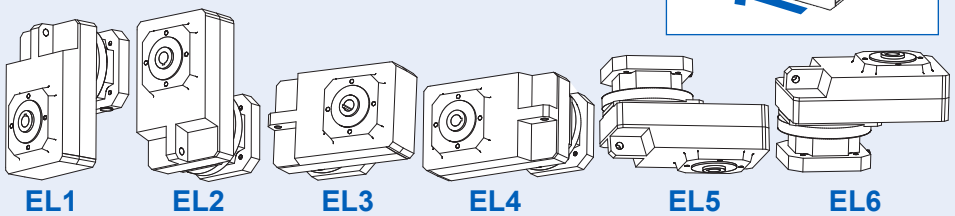

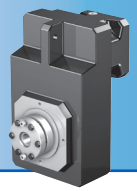

F Series Motor Mounting Plate Option (Motor information required with Motor Adapter option)

STOBER Servo Gearheads fit the motor of your choice with the appropriate motor mounting plate assembled between the motor and the gearhead.

NOTE: When ordering a gearhead:

- Specify the motor manufacturer and part number
- Provide the motor drawing with dimensions, or specify the motor mounting dimensions (per the list shown at right)

For a precise dimension on a specific motor, or for general assistance, we recommend you contact STOBER Technical Support.

Customer Required Dimensions for Properly Sized Motor Mounting Plate

d2	Motor Shaft Diameter (If an adapter bushing is required it will be supplied with the motor plate.)
b6	Pilot Diameter
e6	Bolt Circle Diameter
s6	Bolt Diameter
l5	Motor Shaft Length
f6	Pilot Length
a6	Square Flange (Optional – motor plate will typically be made to match this dimension.)

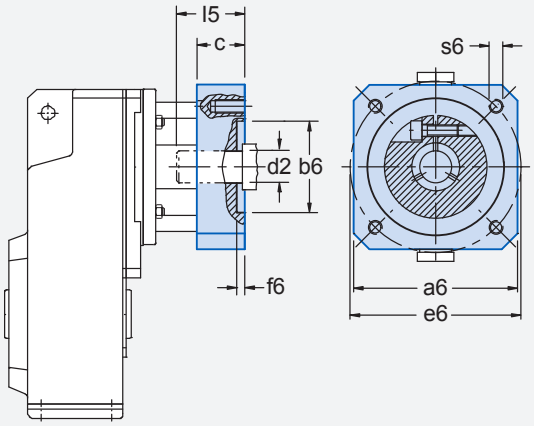

Motor Mounting Plate Dimensions — mm(Gearhead Part Number Specific)	ME10	ME20	ME30	ME40
Maximum Allowed Motor Shaft Dia. d2	19	32	38	48
Minimum Allowed Motor Plate Thickness c*	21	24	26	35

** Note that the c motor plate thickness is determined by the motor shaft length. The minimum motor plate thickness is the value listed.*

F Series Motor Mounting Plate Access Hole

Access to the clamping screw for the motor coupling is located on the 270° side of the motor mounting plate at the location shown. If necessary, the motor mounting plate can be rotated in the field, if a 0°, 90° or 180° orientation for the access hole is desirable.

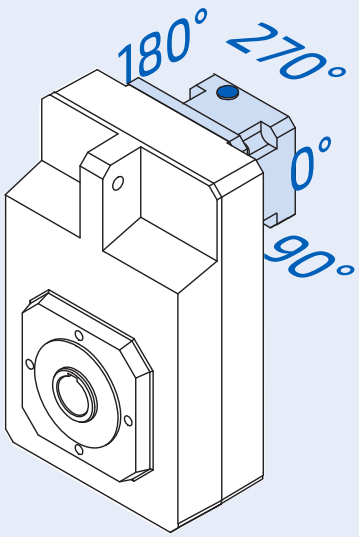

F Series Output Options

Diameters in **BOLD BLUE** are configurations readily available from inventory. Contact STOBER for delivery on other output sizes.

			F1	F2	F3	F4	F6
Solid Shaft	Carbon Steel	Inches	**1**	**1-1/4**	**1-3/8**	**1-5/8**	**2-1/8**
		Metric	25	—	—	40	—
	Stainless Steel*	Inches	—	—	—	—	—
		Metric	—	—	—	—	—
Hollow Bore	Carbon Steel	Inches	**3/4**	**1**	**1-1/4**	1-7/16 **1-1/2**	**2**
		Metric	20	25	30	40	50
	Stainless Steel*	Inches	—	—	**1-1/4**	**1-1/2**	—
		Metric	—	—	—	—	—
Wobble Free Bushing (Single & Double Bushings**)	Stainless Steel*	Inches	**3/4**	1 **1-3/16**	1 1-3/16 **1-1/4** **1-7/16** **1-1/2**	**1-7/16** **1-1/2**	**1-7/16** **1-1/2** **1-15/16** **2**
		Metric	20	—	—	40	—
Shrink Ring	Carbon Steel	Metric	**20**	**25**	**30**	**40**	—

** Stainless steel options are ideal for food and corrosion rsistant, harsh washdown environments.*
*** Double bushings only available with two stage units*
**** Double bushing only*

Permissible Motor Tilting Torque

The permissible tilting torque of the motor attached to the gear unit is a result of the static and dynamic load "F" from the motor weight, mass acceleration, and vibration multiplied by the distance from the center of gravity "l_S" of the motor.

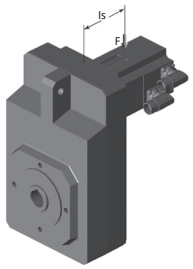

$M_{1k} = F \times l_S \leq M_{1K}$

M_{1K}	ME10	ME20	ME30	ME40	ME50
Nm	25	60	125	250	250

Permissible Output Shaft Load and Tilting Moments*

	V Solid Shaft Output				A, S, W Hollow Output [1]		
	Z_2	F_{2A}	F_{2R}	M_{2K}	Z_2	F_{2A}	M_{2K}
Unit	mm	N	N	Nm	mm	N	Nm
F1	35	1100	4200	260	30	900	175
F2	41	1400	5400	400	33	1200	250
F3	43	1900	7500	600	33	1350	375
F4	44	2350	9250	800	39	1900	550
F6	44	3100	12,500	1200	45	2200	800

** Refer to illustration and definitions below.*
[1] Values shown for "W" Style are for double bushings. For single bushings use value M_{2K} x 0.5 and F_{2A} x 0.5

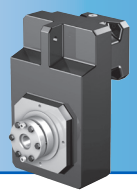

Overhung Load Calculations

Pulling forces or overhung load of pulleys, sheaves, sprockets, etc. on the reducer output shaft must not exceed the allowable limits shown in the load/life/speed calculations below.

Note: Overhung load is measured at the center of the shaft extension. No overhung load is encountered when a reducer is flange mounted and/or coupling connected to another unit. However, the shafts of all components must be accurately aligned and secured to prevent pre-loading of the bearings and premature bearing failure.

Use the following formula to determine actual overhung load for a given drive:.

$$\textbf{Imperial OHL (lbs)} = \frac{126{,}000 \times HP \times K}{D \times n}$$

$$\textbf{Metric OHL (N)} = \frac{19{,}100 \times kW \times K}{D \times n}$$

Where:

OHL	Overhung load (N or lbs)
HP	Horsepower
kW	Transmitted Kilowatt
D	Pitch Diameter (inches or meters) of Sprocket, Gear, Sheave, Pulley, etc.
n	Maximum Shaft RPM
K	1.00 Single Chain Drive; 1.25 Timing Belt Drive; 1.25 Spur or Helical Gear Drive; 1.50 V-Belt Drive; 2.50 Flat Belt Drive

F Series Load/Life/Speed Calculations

The permissible load and tilting moment values are based on an output speed of 20 RPM. For higher speeds the following applies, where n_2 is the desired speed:

$$F_{2axN} = \frac{F_{2ax20}}{\sqrt[3]{\frac{n_{2m*}}{20\ rpm}}} \qquad F_{2radN} = \frac{F_{2rad20}}{\sqrt[3]{\frac{n_{2m*}}{20\ rpm}}} \qquad M_{2kN} = \frac{M_{2k20}}{\sqrt[3]{\frac{n_{2m*}}{20\ rpm}}}$$

The application output tilting moment should be determined by the following formula:

$$M_{2k*} = \frac{2 \bullet F_{2ax*} \bullet Y_2 + F_{2rad*} \bullet (x_2+z_2)}{1000} \leq M_{2kN}$$

$$F_{2rad*} \leq F_{2radN} \qquad F_{2ax*} \leq F_{2axN}$$

Where:

z_2	Distance of Shaft Shoulder to Center of Output Bearing
n_2	Actual Average Output Speed
x_2	Distance of the Shaft Shoulder to the Force Application Point
Y_2	Distance of the Shaft Axis to the Axial Force Application Point
F_{2ax*}	Actual Axial Force at Gear Unit Output
F_{2ax100}	Permitted Axial Force
$F_{2rad100}$	Permitted Radial Force ≤100RPM
$F_{2rad,acc}$	Radial Acceleration Force
$F_{2rad,acc*}$	Radial Acceleration Force at Gear Unit Output
M_{2K100}	Permitted Tilting Torque ≤100RPM
$M_{2K,acc}$	Permitted Acceleration Tilting Torque
$M_{2k,acc*}$	Permitted Acceleration Tilting Torque at Gear Unit Output
C_{2K}	Tilting Stiffness

All formulas shown are based on METRIC values

Upper case letters are permissible values. Lower case letters are for existing values.

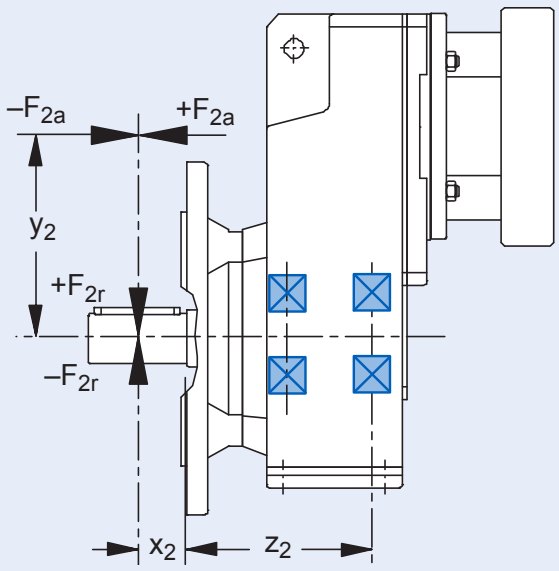

Reducer Ratio (i)		Output Torque			Backlash [3]	Part Number	Max. Input Speed RPM (n1)			Motor Shaft Max Ø	Input Inertia	Tors. Stiffness
		Nom. [1]	Accel.	Peak [2]			Continuous		Cyclic			
		M_{2N}	M_{2acc}	M_{2NOT}	$\Delta\phi_2$	(Gearhead + Input)	EL 1,2,3,4	EL 5,6	All	d_{MW}	J_1	C_2
Nom.	Exact	Nm	Nm	Nm	arcmin					mm	kgcm²	Nm/ arcmin
F1												
4.308	56/13	69	100	125	11/8	F102_0043 ME10	3500	3000	6000	≤19	2.1	6.2
						F102_0043 ME20				≤24	4.0	6.4
7.156	322/45	81	105	200	11/8	F102_0072 ME10	3700	3600	6000	≤19	1.3	6.4
						F102_0072 ME20				≤24	3.2	6.5
10.92	273/25	94	105	200	11/8	F102_0110 ME10	4000	4000	6500	≤19	0.9	6.5
						F102_0110 ME20	3700	3700	6000	≤24	2.8	
18.46	1495/81	110	120	240	11/6	F102_0185 ME10	3700	3600	6000	≤19	1.0	7.7
						F102_0185 ME20				≤24	2.9	
28.17	169/6	120	120	240	11/6	F102_0280 ME10	4000	4000	6500	≤19	0.8	7.7
						F102_0280 ME20	3700	3700	6000	≤24	2.7	
46.43	325/7	120	120	240	11/6	F102_0460 ME10	4000	4000	7000	≤19	0.7	7.7
						F102_0460 ME20	3700	3700	6000	≤24	2.6	
55.97	2015/36	120	120	240	11/6	F102_0560 ME10	4000	4000	7000	≤19	0.7	7.7
						F102_0560 ME20	3700	3700	6000	≤24	2.6	
70.06	1261/18	120	120	240	11/6	F102_0700 ME10	4000	4000	7000	≤19	0.7	7.7
						F102_0700 ME20	3700	3700	6000	≤24	2.6	
93.63	7865/84	120	120	240	11/6	F102_0940 ME10	4000	4000	7000	≤19	0.6	7.7
111.9	2015/18	120	120	240	11/6	F102_1120 ME10	4000	4000	7000	≤19	0.6	7.7
F2		**(continued next page)**										
5.552	5341/962	149	210	400	11/8	F202_0056 ME20	3100	2600	5000	≤32	7.1	15.0
						F202_0056 ME30				≤38	12.0	
9.006	3161/351	160	210	262	11/8	F202_0090 ME10	3600	3100	6000	≤19	1.9	15.0
		175		400		F202_0090 ME20				≤32	5.3	
						F202_0090 ME30	3500		5000	≤38	11.0	
10.80	7303/676	166	210	314	11/8	F202_0110 ME10	3800	3500	6000	≤19	1.6	15.0
		185		400		F202_0110 ME20	3700			≤32	5.0	
						F202_0110 ME30	3500		5000	≤38	10.0	16.0
13.63	109/8	180	210	397	11/8	F202_0135 ME10	3800	3500	6000	≤19	1.3	15.0
		200		400		F202_0135 ME20	3700			≤32	4.7	16.0
						F202_0135 ME30	3500		5000	≤38	10.0	
23.43	2320/99	240	270	480	11/6	F202_0230 ME10	3600	3100	6000	≤19	1.3	18.0
						F202_0230 ME20				≤32	4.7	
						F202_0230 ME30	3500		5000	≤38	10.0	

[1] *Maximum torque for continuous input 1500 RPM - horizontal output position.*
[2] *Maximum momentary torque for emergency stops or heavy shock load. (Admissible stops per life of gearhead = 1,000 stops maximum.)*
[3] *Backlash shown standard/reduced*

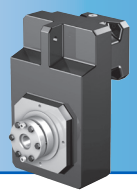

Selection Data

Reducer Ratio (i)		Output Torque			Backlash [3]	Part Number	Max. Input Speed RPM (n1)			Motor Shaft Max Ø	Input Inertia	Tors. Stiffness
		Nom. [1]	Accel.	Peak [2]			Continuous		Cyclic			
Nom.	Exact	M_{2N} Nm	M_{2acc} Nm	M_{2NOT} Nm	$\Delta\phi_2$ arcmin	(Gearhead + Input)	EL 1,2,3,4	EL 5,6	All	d_{MW} mm	J_1 kgcm²	C_2 Nm/arcmin
F2	**(continued from previous page)**											
28.11	4020/143	240	270	480	11/6	F202_0280 ME10	3800	3500	6000	≤19	1.1	18.0
						F202_0280 ME20	3700			≤32	4.5	
						F202_0280 ME30	3500		5000	≤38	9.9	
35.46	390/11	240	270	480	11/6	F202_0350 ME10	3800	3500	6000	≤19	1.0	18.0
						F202_0350 ME20	3700			≤32	4.4	
						F202_0350 ME30	3500		5000	≤38	9.7	
56.73	624/11	240	270	480	11/6	F202_0570 ME10	4000	3900	6500	≤19	0.8	18.0
						F202_0570 ME20	3700	3700	6000	≤24	2.7	
70.13	5400/77	240	270	480	11/6	F202_0700 ME10	4000	3900	6500	≤19	0.8	18.0
						F202_0700 ME20	3700	3700	6000	≤24	2.7	
93.82	1032/11	240	270	480	11/6	F202_0940 ME10	4000	3900	6500	≤19	0.7	18.0
						F202_0940 ME20	3700	3700	6000	≤24	2.6	
222.2	2444/11	240	270	480	11/7	F203_2220 ME10	4000	3900	6500	≤19	0.7	18.0
274.7	21150/77	240	270	480	11/7	F203_2750 ME10	4000	3900	6500	≤19	0.7	18.0
367.5	4042/11	240	270	480	11/7	F203_3670 ME10	4000	3900	6500	≤19	0.7	18.0
F3	**(continued next page)**											
5.720	143/25	250	333	416	11/8	F302_0057 ME20	3000	2600	4500	≤32	9.7	20.0
						F302_0057 ME30				≤38	15.0	
8.986	5616/625	180	209	262	11/8	F302_0090 ME10	3500	3100	5000	≤19	3.3	20.0
		290	350	650		F302_0090 ME20				≤32	6.7	
						F302_0090 ME30				≤38	12.0	
10.79	1456/135	187	251	314	11/8	F302_0110 ME10	3700	3500	5500	≤19	2.5	20.0
		308	350	650		F302_0110 ME20				≤32	5.9	
						F302_0110 ME30	3500		5000	≤38	11.0	
13.38	7696/575	199	312	390	11/8	F302_0135 ME10	3700	3500	5500	≤19	1.9	20.0
		331	350	650		F302_0135 ME20				≤32	5.3	
						F302_0135 ME30	3500		5000	≤38	11.0	
23.52	588/25	400	450	685	11/6	F302_0240 ME10	3500	3100	5000	≤19	2.0	22.0
				800		F302_0240 ME20				≤32	5.4	
						F302_0240 ME30				≤38	11.0	
28.23	6860/243	400	450	800	11/6	F302_0280 ME10	3700	3500	5500	≤19	1.7	22.0
						F302_0280 ME20				≤32	5.1	
						F302_0280 ME30	3500		5000	≤38	10.0	

[1] *Maximum torque for continuous input 1500 RPM - horizontal output position.*
[2] *Maximum momentary torque for emergency stops or heavy shock load. (Admissible stops per life of gearhead = 1,000 stops maximum.)*
[3] *Backlash shown standard/reduced*

Reducer Ratio (i)		Output Torque			Backlash [3]	Part Number	Max. Input Speed RPM (n1)			Motor Shaft Max Ø	Input Inertia	Tors. Stiffness
		Nom. [1]	Accel.	Peak [2]			Continuous		Cyclic			
Nom.	Exact	M_{2N}	M_{2acc}	M_{2NOT}	$\Delta\phi_2$	(Gearhead + Input)	EL 1,2,3,4	EL 5,6	All	d_{MW}	J_1	C_2
		Nm	Nm	Nm	arcmin					mm	kgcm²	Nm/ arcmin
F3		**(continued from previous page)**										
35.03	7252/207	400	450	800	11/6	F302_0350 ME10	3700	3500	5500	≤19	1.4	22.0
						F302_0350 ME20				≤32	4.8	
						F302_0350 ME30	3500		5000	≤38	10.0	
47.19	1274/27	400	450	800	11/6	F302_0470 ME10	4000	3900	6500	≤19	1.1	22.0
						F302_0470 ME20	3700	3700	6000	≤32	4.5	
						F302_0470 ME30	3500	3500	5000	≤38	9.8	
56.49	4067/72	400	450	800	11/6	F302_0560 ME10	4000	3900	6500	≤19	1.0	22.0
						F302_0560 ME20	3700	3700	6000	≤32	4.4	
						F302_0560 ME30	3500	3500	5000	≤38	9.7	
70.36	2744/39	400	450	800	11/6	F302_0700 ME10	4000	3900	6500	≤19	0.9	22.0
						F302_0700 ME20	3700	3700	6000	≤24	2.8	
93.64	4214/45	400	450	800	11/6	F302_0940 ME10	4000	3900	6500	≤19	0.8	22.0
						F302_0940 ME20	3700	3700	6000	≤24	2.7	
112.8	3724/33	400	450	800	11/6	F302_1130 ME10	4000	3900	6500	≤19	0.7	22.0
						F302_1130 ME20	3700	3700	6000	≤24	2.6	
182.4	73892/405	400	450	800	11/7	F303_1820 ME20	3700	3700	6000	≤24	2.7	22.0
218.4	117943/540	400	450	800	11/7	F303_2180 ME20	3700	3700	6000	≤24	2.7	22.0
272.1	159152/585	400	450	800	11/7	F303_2720 ME20	3700	3700	6000	≤24	2.7	22.0
275.6	32242/117	400	450	800	11/7	F303_2760 ME10	4000	3900	6500	≤19	0.7	22.0
362.1	244412/675	400	450	800	11/7	F303_3620 ME20	3700	3700	6000	≤24	2.7	22.0
366.8	99029/270	400	450	800	11/7	F303_3670 ME10	4000	3900	6500	≤19	0.7	22.0
442.0	43757/99	400	450	800	11/7	F303_4420 ME10	4000	3900	6500	≤19	0.7	22.0
F4		**(continued next page)**										
5.813	3784/651	415	550	1100	10/7	F402_0058 ME30	2700	2300	4000	≤38	20.0	38.0
						F402_0058 ME40				≤48	42.0	
8.980	440/49	469	523	653	10/7	F402_0090 ME20	3200	2800	4800	≤32	8.8	38.0
		479	550	1100		F402_0090 ME30				≤38	14.0	
						F402_0090 ME40	3000		4500	≤48	36.0	
10.83	682/63	487	550	788	10/7	F402_0110 ME20	3500	3100	5500	≤32	7.5	38.0
		510		1100		F402_0110 ME30			5000	≤38	13.0	
						F402_0110 ME40	3000	3000	4500	≤48	35.0	

[1] *Maximum torque for continuous input 1500 RPM - horizontal output position.*
[2] *Maximum momentary torque for emergency stops or heavy shock load. (Admissible stops per life of gearhead = 1,000 stops maximum.)*
[3] *Backlash shown standard/reduced*

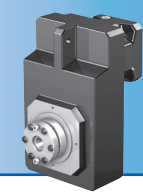

Selection Data

Reducer Ratio (i)		Output Torque			Backlash [3] $\Delta\phi_2$	Part Number (Gearhead + Input)	Max. Input Speed RPM (n1)			Motor Shaft Max Ø d_{MW}	Input Inertia J_1	Tors. Stiffness C_2
		Nom. [1] M_{2N}	Accel. M_{2acc}	Peak [2] M_{2NOT}			Continuous		Cyclic			
Nom.	Exact	Nm	Nm	Nm	arcmin		EL 1,2,3,4	EL 5,6	All	mm	kgcm²	Nm/ arcmin

F4 (continued from previous page)

13.57	5984/441	536	550	932	10/7	F402_0135 ME20	3500	3100	5500	≤32	6.4	38.0
		550		1100		F402_0135 ME30			5000	≤38	12.0	39.0
						F402_0135 ME40	3000	3000	4500	≤48	34.0	
23.21	325/14	658	700	1400	10/5	F402_0230 ME20	3200	2800	4800	≤32	6.4	39.0
						F402_0230 ME30				≤38	12.0	
						F402_0230 ME40	3000		4500	≤48	34.0	
27.99	2015/72	700	700	1400	10/5	F402_0280 ME20	3500	3100	5500	≤32	5.9	39.0
						F402_0280 ME30			5000	≤38	11.0	
						F402_0280 ME40	3000	3000	4500	≤48	33.0	
35.08	2210/63	700	700	1400	10/5	F402_0350 ME20	3500	3100	5500	≤32	5.3	39.0
						F402_0350 ME30			5000	≤38	11.0	
						F402_0350 ME40	3000	3000	4500	≤48	33.0	
55.97	2015/36	700	700	1400	10/5	F402_0560 ME20	3700	3500	6000	≤32	4.7	39.0
						F402_0560 ME30	3500		5000	≤38	10.0	
70.06	1261/18	700	700	1400	10/5	F402_0700 ME20	3700	3500	6000	≤32	4.5	39.0
						F402_0700 ME30	3500		5000	≤38	9.8	
93.33	280/3	700	700	1400	10/5	F402_0930 ME20	3700	3500	6000	≤24	2.8	39.0
112.3	1235/11	700	700	1400	10/5	F402_1120 ME20	3700	3500	6000	≤24	2.7	39.0
216.4	11687/54	700	700	1400	10/6	F403_2160 ME20	3700	3500	6000	≤24	2.7	39.0
270.9	36569/135	700	700	1400	10/6	F403_2710 ME20	3700	3500	6000	≤24	2.7	39.0
274.4	59267/216	700	700	1400	10/6	F403_2740 ME10	3800	3500	6000	≤19	0.7	39.0
360.9	3248/9	700	700	1400	10/6	F403_3610 ME20	3700	3500	6000	≤24	2.7	39.0
365.6	3290/9	700	700	1400	10/6	F403_3660 ME10	3800	3500	6000	≤19	0.7	39.0
434.1	14326/33	700	700	1400	10/6	F403_4340 ME20	3700	3500	6000	≤24	2.7	39.0
439.7	58045/132	700	700	1400	10/6	F403_4400 ME10	3800	3500	6000	≤19	0.7	39.0

[1] *Maximum torque for continuous input 1500 RPM - horizontal output position.*
[2] *Maximum momentary torque for emergency stops or heavy shock load. (Admissible stops per life of gearhead = 1,000 stops maximum.)*
[3] *Backlash shown standard/reduced*

Reducer Ratio (i)		Output Torque			Backlash [3]	Part Number	Max. Input Speed RPM (n1)			Motor Shaft Max Ø	Input Inertia	Tors. Stiffness
		Nom. [1]	Accel.	Peak [2]			Continuous		Cyclic			
		M_{2N}	M_{2acc}	M_{2NOT}	$\Delta\phi_2$					d_{MW}	J_1	C_2
Nom.	Exact	Nm	Nm	Nm	arcmin	(Gearhead + Input)	EL 1,2,3,4	EL 5,6	All	mm	kgcm²	Nm/ arcmin
F6		**(continued next page)**										
4.546	1273/280	581	706	883	10/7	F602_0045 ME30	2500	2100	3500	≤38	46.0	69.0
		638				F602_0045 ME40				≤48	68.0	
7.159	3551/496	702	1000	1385	10/7	F602_0072 ME30	2900	2500	4500	≤38	26.0	71.0
		743				F602_0072 ME40				≤48	48.0	
10.82	2077/192	564	630	787	10/7	F602_0110 ME20	3300	2800	5000	≤32	12.0	71.0
		819	1000	1600		F602_0110 ME30				≤38	17.0	72.0
		852				F602_0110 ME40	3000		4500	≤48	39.0	
18.52	3445/186	1019	1100	2000	10/5	F602_0185 ME30	2900	2500	4500	≤38	17.0	77.0
						F602_0185 ME40				≤48	39.0	
27.99	2015/72	1100	1100	2000	10/5	F602_0280 ME20	3300	2800	5000	≤32	8.2	77.0
						F602_0280 ME30				≤38	14.0	
						F602_0280 ME40	3000		4500	≤48	36.0	
46.72	1495/32	1100	1100	2000	10/5	F602_0470 ME20	3500	3200	5500	≤32	6.0	77.0
						F602_0470 ME30			5000	≤38	11.0	
						F602_0470 ME40	3000	3000	4500	≤48	33.0	
55.71	390/7	1100	1100	2000	10/5	F602_0560 ME20	3500	3200	5500	≤32	5.5	77.0
						F602_0560 ME30			5000	≤38	11.0	
93.33	280/3	1100	1100	2000	10/5	F602_0930 ME20	3500	3200	5500	≤32	4.7	77.0
						F602_0930 ME30			5000	≤38	10.0	
112.2	9425/84	1100	1100	2000	10/5	F602_1120 ME20	3500	3200	5500	≤24	3.0	77.0
180.6	8671/48	1100	1100	2000	10/6	F603_1810 ME20	3500	3200	5500	≤24	2.8	77.0
215.4	1508/7	1100	1100	2000	10/6	F603_2150 ME20	3500	3200	5500	≤24	2.8	77.0
360.9	3248/9	1100	1100	2000	10/6	F603_3610 ME20	3500	3200	5500	≤24	2.7	77.0
433.8	54665/126	1100	1100	2000	10/6	F603_4340 ME20	3500	3200	5500	≤24	2.7	77.0

[1] *Maximum torque for continuous input 1500 RPM - horizontal output position.*
[2] *Maximum momentary torque for emergency stops or heavy shock load. (Admissible stops per life of gearhead = 1,000 stops maximum.)*
[3] *Backlash shown standard/reduced*

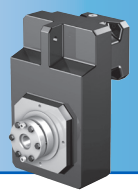

Dimensional Data

"V" Shaft Output with "F" Output Flange — All Sizes

** See Motor Mounting Plate Option, page 105 for details.*

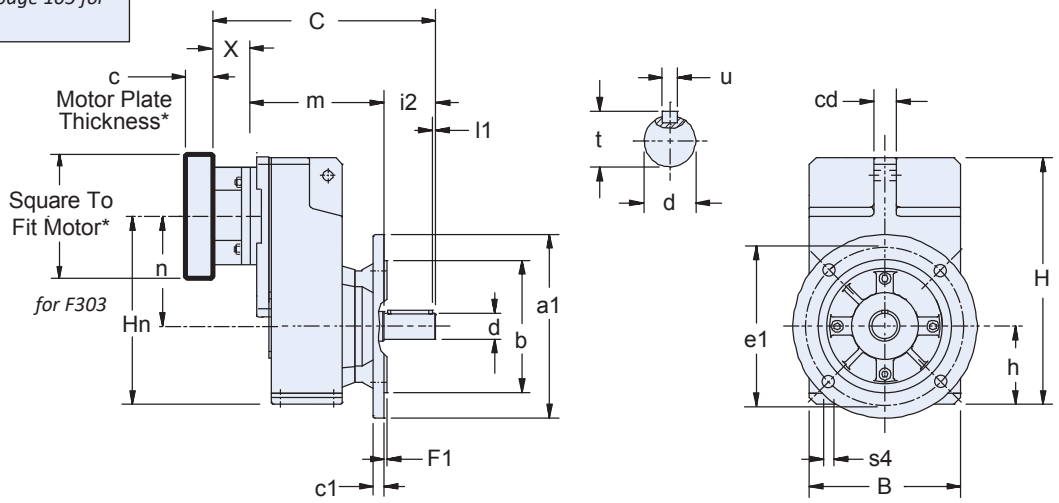

Table 1 Dimensions (mm)

Unit	a1	B	b_{j6}	c1	cd	e1	F1	H	h	Hn	i2	l1	n	s4
F1	160	145	110	10	20	130	3.5	238	74	176	50	5	102	9
F2	200	180	130	14	22	165	3.5	299	93	224	60	5	131	11
F3	250	206	180	15	30	215	4	335.5	106	219	70	5	149.5[1)]	14
F4	250	230	180	15	30	215	4	370	116	285[1)]	80	5	169[1)]	14
F6	300	265	230	17	35	265	4	433	137	333	100	5	196	14

[1)] *For F303, n is 113 with ME20; For F403, n is 132 with ME20 and Hn is 248.*

Table 2 "V" Shaft Output Dimensions

	Standard Shaft - in			Optional Shaft* - mm		
Unit	d_{h6}	t	u	d_{k6}	t	u
F1	1.000	1.11	1/4 x 1/4 x 1-9/16	25	28	A8x7x40
F2	1.250	1.36	1/4 x 1/4 x 1-15/16	30	33	A8x7x50
F3	1.375	1.51	5/16 x 5/16 x 2-5/16	35	38	A10x8x60
F4	1.625	1.79	3/8 x 3/8 x 2-7/8	40	43	A12x8x70
F6	2.125	2.35	1/2 x 1/2 x 3-5/32	50	53.5	A14x9x90

**Metric output available on request*

Table 3 Dimensions (mm)

	ME10		ME20		ME30		ME40		Approx.
Unit	C	m	C	m	C	m	C	m	Wt. lbs.
F102	219.5	129.5	233.5	133.5	—	—	—	—	38
F202	253	153	267	157	279	159	—	—	51
F203	290	190	—	—	—	—	—	—	64
F302	279.5	169.5	293.5	173.5	305.5	175.5	—	—	67
F303	316.5	206.5	336.5	216.5	—	—	—	—	73
F402	—	—	318.5	188.5	330.5	190.5	361.5	193.5	84
F403	341.5	221.5	361.5	231.5	—	—	—	—	91
F602	—	—	369.5	219.5	381.5	221.5	412.5	224.5	165
F603	—	—	412.5	262.5	—	—	—		177

Table 4 Motor Adapter Dimensions (mm)

Motor Adapter	Thickness[3)] c Min.	Motor Shaft d2 Max.[2)]	X	Wt. lbs.
ME10	21	19	40	5
ME20	24	32	50	8
ME30	25	38	60	12
ME40	33	48	88	18

[2)] *If an adapter bushing is required it will be supplied as a component of the motor mounting plate.*

[3)] *Motor plate maximum thickness (c) will vary with motor shaft length but will not be less than shown.*

For approximate weight, add unit weight from Table 3 and adapter weight from Table 4.

"W" Single Bushing with "G" Pitch Circle Diameter (PCD) Tapped Holes — All Sizes

Important: For ease of installation, a 1/32" x 45° chamfer (minimum) is recommended for the output shaft end.

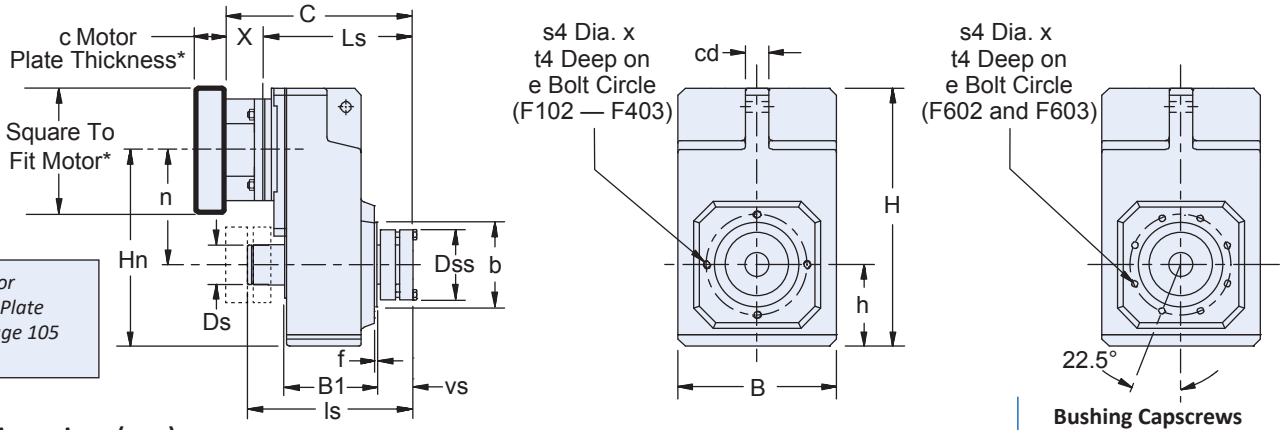

** See Motor Mounting Plate Option, page 105 for details.*

Table 1 Dimensions (mm)

Unit	B	b_{j6}	B1	cd	Ds	Ds	Dss	e	f	H	h	Hn	ls	n	s4	t4	vs	Bushing Capscrews No. – Size Metric	Bushing Capscrews Tightening Torque – Nm
F1	145	75	87	20	34.5	34.5	68	85	2.5	238	74	176	170.9	102	M8x1.25	13	30	6 – M6x25	10
F2	180	95	105	22	44.5	44.5	78	115	3	299	93	224	197.4	131	M8x1.25	13	39	8 – M6x30	10
F3	206	110	120	30	48	48	84	130	3.5	335.5	106	255.5	218.9	149.5[1)]	M10x1.5	16	39	8 – M6x30	10
F4	230	110	135	30	54.5	54.5	97	130	3.5	370	116	285[1)]	243.1	169[1)]	M10x1.5	16	45	8 – M8x30	25
F6	265	130	166	35	64.5	64.5	105	165	3.5	433	137	333	275.3	196	M10x1.5	16	45	8 – M8x30	25

[1)] *For F303, n is 113 with ME20; For F403, n is 132 with ME20 and Hn is 248.*

Table 2 "WF" Single Side Bushings* — Stock Bores Sizes

Unit	Metric			Inches												
	20	30	35	3/4	1	1-3/16	1-1/4	1-3/8	1-7/16	1-1/2	1-5/8	1-11/16	1-3/4	1-7/8	1-15/16	2
F1	WF1-20	—	—	WF1-075	—	—	—	—	—	—	—	—	—	—	—	—
F2	—	WF2-30	—	—	WF2-100	WF2-103	—	—	—	—	—	—	—	—	—	—
F3	—	WF3-30	WF3-35	—	WF3-100	WF3-103	WF3-104	WF3-106	WF3-107	WF3-108	—	—	—	—	—	—
F4	—	—	—	—	WF4-100	WF4-103	WF4-104	WF4-106	WF4-107	WF4-108	—	—	—	—	—	—
F6**	—	—	—	—	—	—	—	—	WF5-107	WF5-108	WF5-110	WF5-111	WF5-112	WF5-114	WF5-115	WF5-200

**A complete bushing kit includes the locking ring assembly, tapered cone, support ring, and all hardware to mount the kit into the reducer. The bushing will accept a shaft with a tolerance of +0.000/-0.005.*
*** Bushing on side 6 is only available for 2 stage gear reducers without a cover.*

Table 3 Dimensions (mm)

Unit	ME10		ME20		ME30		ME40		Approx. Wt. lbs.
	C	Ls	C	Ls	C	Ls	C	Ls	
F102	170	130	184	134	—	—	—	—	38
F202	197	157	211	161	223	163	—	—	51
F203	234	194	—	—	—	—	—	—	64
F302	212	172	226	176	238	178	—	—	67
F303	249	209	269	219	—	—	—	—	73
F402	—	—	247	197	259	199	290	202	84
F403	270	230	290	240	—	—	—	—	91
F602	—	—	278	228	290	230	321	233	165
F603	—	—	321	271	—	—	—	—	177

Table 4 Motor Adapter Dimensions (mm)

Motor Adapter	Thickness[3)] c Min.	Motor Shaft d2 Max.[2)]	X	Wt. lbs.
ME10	21	19	40	5
ME20	24	32	50	8
ME30	25	38	60	12
ME40	33	48	88	18

[2)] *If an adapter bushing is required it will be supplied as a component of the motor mounting plate.*

[3)] *Motor plate maximum thickness (c) will vary with motor shaft length but will not be less than shown.*

For approximate weight, add unit weight from Table 3 and adapter weight from Table 4.

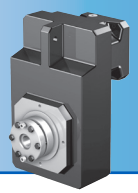

Dimensional Data

"W" Double Bushing with "G" Pitch Circle Diameter (PCD) Tapped Holes — Two Stage Units Only

Important: For ease of installation, a 1/32" x 45° chamfer (minimum) is recommended for the output shaft end.The double bushing cannot be mounted in sizes F203, F303, F403, or F603.

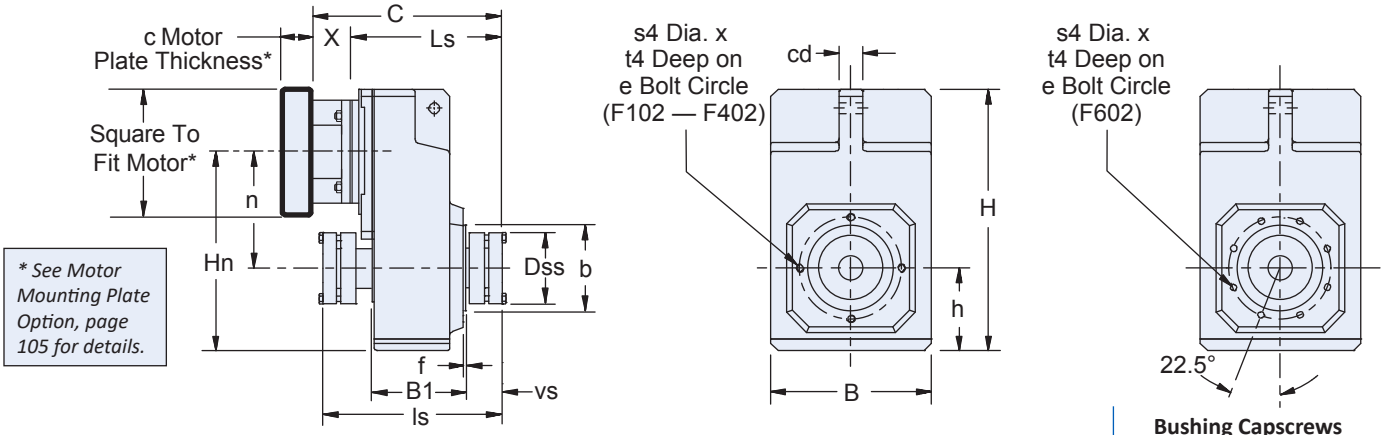

Table 1 Dimensions (mm)

Unit	B	b_{i6}	B1	cd	Dss	e	f	H	h	Hn	ls	n	s4	t4	vs	Bushing Capscrews No. – Size Metric	Bushing Capscrews Tightening Torque – Nm
F102	145	75	87	20	68	85	2.5	238	74	176	170.9	102	M8x1.25	13	30	6 – M6x25	10
F202	180	95	105	22	78	115	3	299	93	224	197.4	131	M8x1.25	13	39	8 – M6x30	10
F302	206	110	120	30	84	130	3.5	335.5	106	255.5	218.9	149.5	M10x1.5	16	39	8 – M6x30	10
F402	230	110	135	30	97	130	3.5	370	116	285	243.1	169	M10x1.5	16	45	8 – M8x30	25
F602	265	130	166	35	105	165	3.5	433	137	333	275.3	196	M10x1.5	16	45	8 – M8x30	25

Table 2 "WFN" Double Side Bushings* — Stock Bores Sizes

	Metric				Inches												
Unit	20	30	35	40	3/4	1	1-3/16	1-1/4	1-3/8	1-7/16	1-1/2	1-5/8	1-11/16	1-3/4	1-7/8	1-15/16	2
F102	WFN1-20	—	—	—	WFN1-075	—	—	—	—	—	—	—	—	—	—	—	—
F202	—	WFN2-30	—	—	—	WFN2-100	WFN2-103	—	—	—	—	—	—	—	—	—	—
F302	—	WFN3-30	WFN3-35	—	—	WFN3-100	WFN3-103	WFN3-104	WFN3-106	WFN3-107	WFN3-108	—	—	—	—	—	—
F402	—	—	—	WFN4-40	—	WFN4-100	WFN4-103	WFN4-104	WFN4-106	WFN4-107	WFN4-108	—	—	—	—	—	—
F602	—	—	—	WFN5-40	—	—	—	—	—	WFN5-107	WFN5-108	WFN5-110	WFN5-111	WFN5-112	WFN5-114	WFN5-115	WFN5-200

**A complete bushing kit includes the locking ring assembly, tapered cone, support ring, and all hardware to mount the kit into the reducer. The bushing will accept a shaft with a tolerance of +0.000/-0.005.*

Table 3 Dimensions (mm)

	ME10		ME20		ME30		ME40		Approx.
Unit	C	Ls	C	Ls	C	Ls	C	Ls	Wt. lbs.
F102	170	130	184	134	—	—	—	—	38
F202	197	157	211	161	223	163	—	—	51
F302	212	172	226	176	238	178	—	—	67
F402	—	—	247	197	259	199	—	—	84
F602	—	—	278	228	290	230	321	233	165

For approximate weight, add unit weight from Table 3 and adapter weight from Table 4.

Table 4 Motor Adapter Dimensions (mm)

Motor Adapter	Thickness [3] c Min.	Motor Shaft d2 Max. [2]	X	Wt. lbs.
ME10	21	19	40	5
ME20	24	32	50	8
ME30	25	38	60	12
ME40	33	48	88	18

[2] If an adapter bushing is required it will be supplied as a component of the motor mounting plate.

[3] Motor plate maximum thickness (c) will vary with motor shaft length but will not be less than shown.

"A" Hollow Output with "F" Output Flange — All Sizes

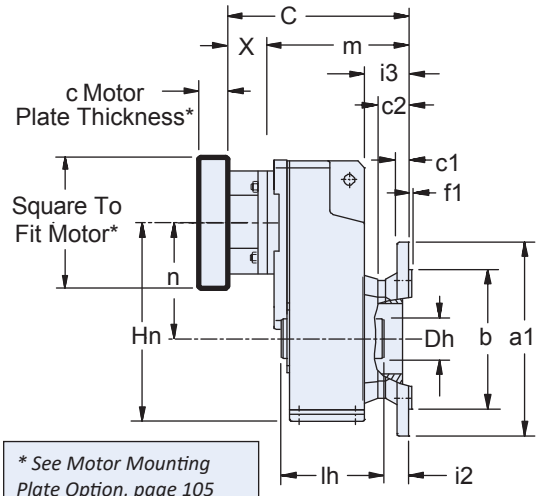

** See Motor Mounting Plate Option, page 105 for details.*

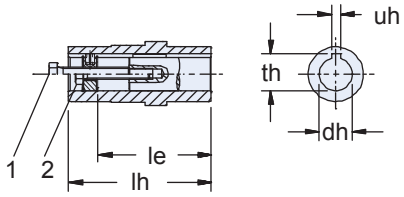

1. Removal Bolt: not supplied. See Installation Guide for details.

2. Mounting Bolt: must be smaller than removal bolt.

See installation guide for installation of hollow output.

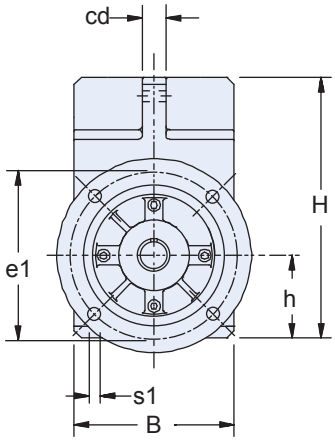

Table 1 Dimensions (mm)

Unit	a1	B	b_{j6}	c1	c2	cd	Dh	e1	f1	H	h	Hn	i2	i3	le	lh	s1	n
F1	160	145	110	10	32	20	35	130	3.5	238	74	176	25.5	44.5	73	95	9	102
F2	200	180	130	14	38	22	45	165	3.5	299	993	224	30	53	92	115	11	131
F3	250	206	180	15	40	30	50	215	4	335.5	106	255.5[1)]	31.5	56.5	103	130	14	149.5[1)]
F4	250	230	180	15	40	30	55	215	4	370	116	285[1)]	31.5	56.5	114	145	14	169[1)]
F6	300	265	230	17	40	35	70	265	4	433	137	333	29.5	60.5	143	180	14	196

[1)] For F303, Hn is 219 and n is 113 with ME20 For F403, Hn is 248 and n is 132 with ME20

Table 2 "A" Hollow Bore Dimensions (mm)

	Standard Bore - inches			Optional Bore* - mm		
Unit	dh_{g7}	th	uh	dh_{H7}	th	uh_{JS9}
F1	0.750	0.84	0.187	20	22.8	6
F2	1.000	1.12	0.250	25	28.3	8
F3	1.250	1.37	0.250	30	33.3	8
F4	1.500	1.67	0.375	40	43.3	12
F6	2.000	2.23	0.500	50	53.8	14

**Metric output available on request.*

For approximate weight, add unit weight from Table 3 and adapter weight from Table 4.

Table 3 Dimensions (mm)

	ME10		ME20		ME30		ME40		Approx.
Unit	C	m	C	m	C	m	C	m	Wt. lbs.
F102	169.5	129.5	183.5	133.5	—	—	—	—	38
F202	193	153	207	157	219	159	—	—	51
F203	230	190	—	—	—	—	—	—	64
F302	209.5	169.5	223.5	173.5	235.5	175.5	—	—	67
F303	246.5	206.5	266.5	216.5	—	—	—	—	73
F402	—	—	238.5	188.5	250.5	190.5	281.5	193.5	84
F403	261.5	221.5	281.5	231.5	—	—	—	—	91
F602	—	—	269.5	219.5	281.5	221.5	312.5	224.5	165
F603	—	—	312.5	262.5	—	—	—	—	177

Table 4 Motor Adapter Dimensions (mm)

Motor Adapter	Thickness[3)] c Min.	Motor Shaft d2 Max.[2)]	X	Wt. lbs.
ME10	21	19	40	5
ME20	24	32	50	8
ME30	25	38	60	12
ME40	33	48	88	18

[2)] If an adapter bushing is required it will be supplied as a component of the motor mounting plate.

[3)] Motor plate maximum thickness (c) will vary with motor shaft length but will not be less than shown.

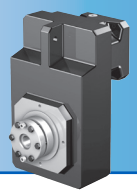

Dimensional Data

"A" Hollow Output with "G" Pitch Circle Diameter (PCD) Tapped Holes — All Sizes

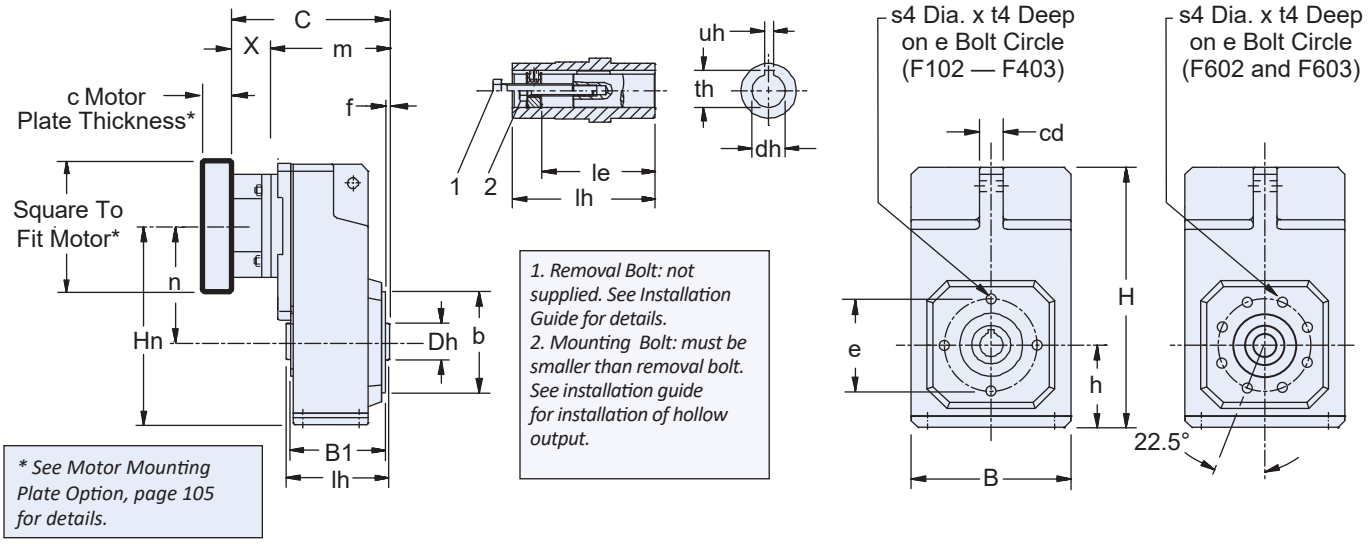

1. Removal Bolt: not supplied. See Installation Guide for details.
2. Mounting Bolt: must be smaller than removal bolt. See installation guide for installation of hollow output.

** See Motor Mounting Plate Option, page 105 for details.*

Table 1 "Dimensions (mm)

Unit	B	B1	b_{j6}	cd	Dh	e	f	H	h	Hn	le	lh	n	s4	t4
F1	145	87	70	20	35	85	2.5	238	74	176	73	95	102	M8x1.25	13
F2	180	105	95	22	45	115	3	299	93	224	92	115	131	M8x1.25	13
F3	206	120	110	30	50	130	3.5	335.5	106	255.5[1)]	103	130	149.5[1)]	M10x1.5	16
F4	230	135	110	30	55	130	3.5	370	116	285[1)]	114	145	169[1)]	M10x1.5	16
F6	265	166	130	35	70	165	3.5	433	137	333	143	180	196	M10x1.5	16

[1)] For F303, Hn is 219 with ME20 and n is 113; For F403, Hn is 248 with ME20 and n is 132

Table 2 "A" Hollow Bore Dimensions (mm)

	Standard Bore - inches			Optional Bore* - mm		
Unit	dh_{g7}	th	uh	dh_{H7}	th	uh_{JS9}
F1	0.750	0.84	0.187	20	22.8	6
F2	1.000	1.12	0.250	25	28.3	8
F3	1.250	1.37	0.250	30	33.3	8
F4	1.500	1.67	0.375	40	43.3	12
F6	2.000	2.23	0.500	50	53.8	14

**Metric output available on request.*

For approximate weight, add unit weight from Table 3 and adapter weight from Table 4.

Table 3 Dimensions (mm)

	ME10		ME20		ME30		ME40		Approx.
Unit	C	m	C	m	C	m	C	m	Wt. lbs.
F102	144	104	158	108	—	—	—	—	38
F202	163	123	177	127	189	129	—	—	51
F203	200	160	—	—	—	—	—	—	64
F302	178	138	192	142	204	144	—	—	67
F303	215	175	235	185	—	—	—	—	73
F402	—	—	207	157	219	159	250	162	84
F403	230	190	250	200	—	—	—	—	91
F602	—	—	240	190	252	192	283	195	165
F603	—	—	283	233	—	—	—	—	177

Table 4 Motor Adapter Dimensions (mm)

Motor Adapter	Thickness[3)] c Min.	Motor Shaft d2 Max.[2)]	X	Wt. lbs.
ME10	21	19	40	5
ME20	24	32	50	8
ME30	25	38	60	12
ME40	33	48	88	18

[2)] If an adapter bushing is required it will be supplied as a component of the motor mounting plate.

[3)] Motor plate maximum thickness (c) will vary with motor shaft length but will not be less than shown.

"A" Hollow Output with "NG" Foot Mounting — All Sizes

See Rubber Buffer Option below for mounting torque arms.

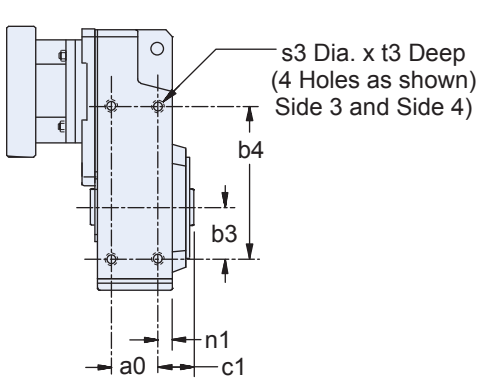

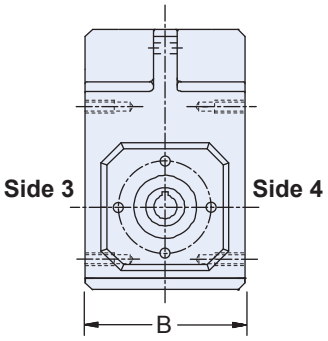

Table 1 Dimensions (mm)

Unit	a0	B	b3	b4	c1	n1	s3	t3
F1	50	142	40	140	29	10	M6	11
F2	64	176	55	175	33.5	10.5	M8	13
F3	72	204	60	200	37.5	12.5	M10	16
F4	87	228	70	220	37.5	12.5	M10	16
F6	108	262	85	270	46.5	15.5	M12	19

Rubber Buffer Option

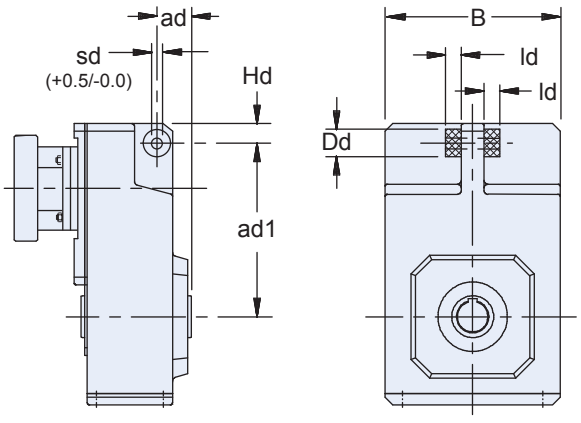

Table 2 "Rubber Buffer Dimensions (mm)

Unit	Part No.	ad	ad1	B	Dd	Hd	ld	sd
F1	25192	35	150	142	30	14	15	11
F2	25192	40	181	176	30	25	15	11
F3	25193	45	205	204	40	24.5	20	12.5
F4	25193	45	228	228	40	26	20	12.5
F6	25194	55	270	262	60	26	30	21

Order two (2) rubber buffers for each unit.

Torque arms are not supplied by STOBER.

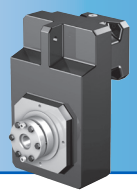

Dimensional Data

"S" Shrink Ring with "G" Pitch Circle Diameter (PCD) Tapped Holes — All Sizes

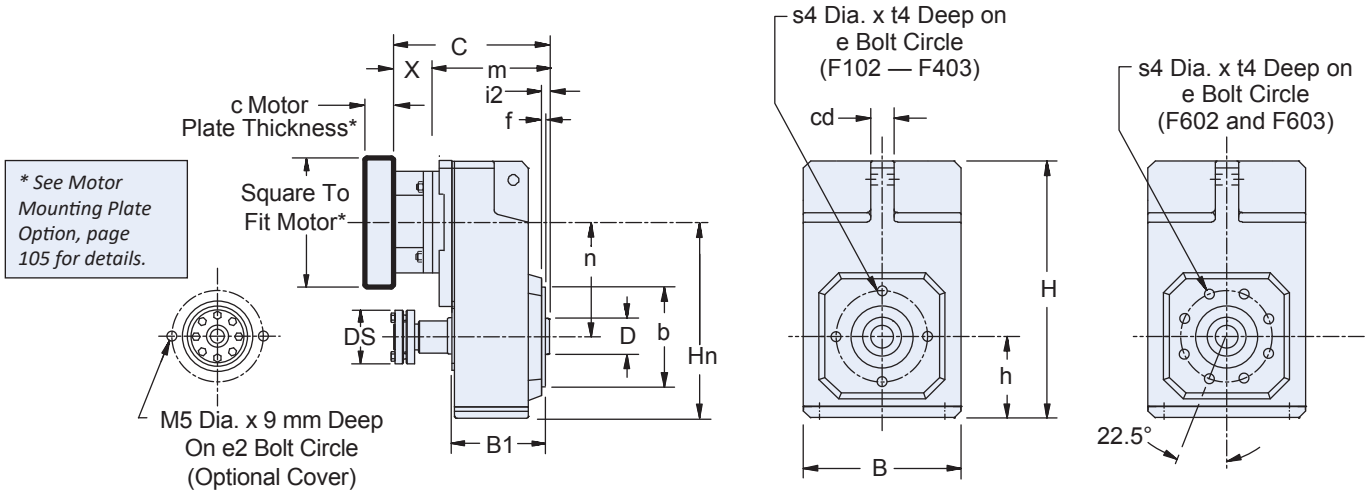

** See Motor Mounting Plate Option, page 105 for details.*

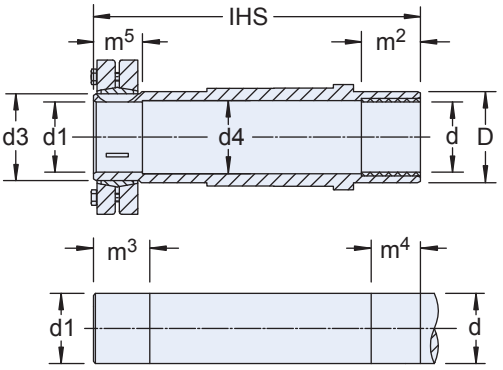

See Installation Guide for shrink ring installation.

Table 1 Shaft Dimensions (mm)

Unit	B	B1	b_{j6}	cd	d_{h9}	D	Bore d H7	Shaft d1 h9	d3	d4
F1	145	87	70	20	20	35	20	20	24	20.5
F2	180	105	95	22	25	45	25	25	30	25.5
F3	206	120	110	30	30	50	30	30	36	30.5
F4	230	135	110	30	40	55	40	40	50	40.5
F6	265	166	130	35	50	70	50	50	62	50.5

Table 2 Dimensions (mm)

Unit	DS	e	e2	f	H	h	Hn	i2	IHS	m^2	m^3	m^4	m^5	n	s4	t4
F1	50	85	58	2.5	238	74	176	6.5	146	20	31	25	26	102	M8x1.25	13
F2	60	115	72	3	299	93	224	8	175	20	37	25	32	131	M8x1.25	13
F3	72	130	78	3.5	335.5	106	255.5	8.5	192	25	37	30	32	149.5	M10x1.5	16
F4	90	130	83	3.5	370	116	285[2]	8.5	210	40	45	45	40	169[1]	M10x1.5	16
F6	106	165	102	3.5	433	137	333	10.5	248	40	47	45	42	196	M10x1.5	16

[1] *For F303, Hn is 219 with ME20 and n is 113; For F403, Hn is 248 with ME20 and n is 132*

Table 3 Dimensions (mm)

	ME10		ME20		ME30		ME40		Approx.
Unit	C	m	C	m	C	m	C	m	Wt. lbs.
F102	144	104	158	108	—	—	—	—	38
F202	163	123	177	127	189	129	—	—	51
F203	200	160	—	—	—	—	—	—	64
F302	178	138	192	142	204	144	—	—	67
F303	215	175	235	185	—	—	—	—	73
F402	—	—	207	157	219	159	250	162	84
F403	230	190	250	200	—	—	—	—	91
F602	—	—	240	190	252	192	283	195	165
F603	—	—	283	233	—	—	—	—	177

Table 4 Motor Adapter Dimensions (mm)

Motor Adapter	Thickness[3] c Min.	Motor Shaft d2 Max.[2]	X	Wt. lbs.
ME10	21	19	40	5
ME20	24	32	50	8
ME30	25	38	60	12
ME40	33	48	88	18

[2] *If an adapter bushing is required it will be supplied as a component of the motor mounting plate.*

[3] *Motor plate maximum thickness (c) will vary with motor shaft length but will not be less than shown.*

For approximate weight, add unit weight from Table 3 and adapter weight from Table 4.

K/KL Series: RIGHT ANGLE — Versatile Outputs

K Features

- 4:1 to 381:1 ratios (K) or 4:1 to 32:1 ratios (KL) (higher ratios available. Contact STOBER.)
- Quiet running (<51dB(A))
- Reduced backlash option for increased precision (K)
- Symmetrical design for universal mounting (KL)
- Mounting flexibility to fit the application
- Adaptability: shafts available in metric or imperial, carbon or stainless steel to meet your requirements
- Optional food and corrosion resistant package
- Dual seals for extreme duty applications
- Error free motor mounting and quick changeover with toleranced pilot on motor plate
- Magnetic oil filtration to remove contaminants to prevent breakdowns
- Build and ship in one day
- Assembled in the USA

*STOBER K Series helical/bevel gear drives are the most versatile Servo right angle gearheads. With mounting flexibility and a variety of output options, they are **the** optimal drive when you need configuration choices. The K hollow bore can easily replace a belt and pulley, eliminating additional components and accessories. Every gearbox is made to order. STOBER will custom whatever you need to fit your application. Contact us today to learn more.*

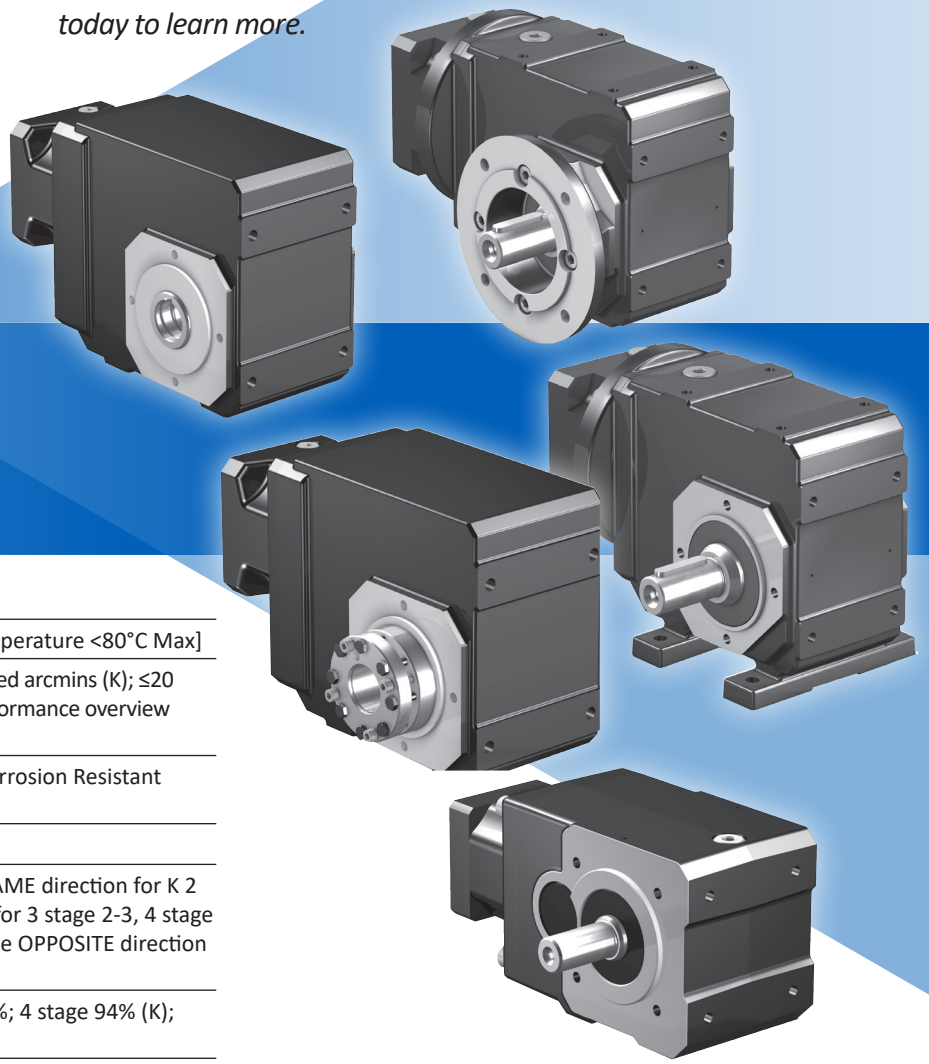

SHIPS in 1 DAY!
NO EXPEDITE FEE FOR 24 HOUR SERVICE

General Specifications

Ambient Temperature	0°C to +40°C (104°F) [Unit temperature <80°C Max]
Backlash	≤10 standard arcmins, ≤4 reduced arcmins (K); ≤20 standard arcmins (KL); (see performance overview chart, (see page 123)
Coating	Standard Black (RAL-9005), Corrosion Resistant option, Food option
Degree of Protection	IP65
Direction of Rotation	Input and output rotate the SAME direction for K 2 stage, 3 stage, 5-10, opposite for 3 stage 2-3, 4 stage (K); Input and output rotate the OPPOSITE direction (KL); (see page 122)
Efficiency	1 and 2 stage 97%; 3 stage 96%; 4 stage 94% (K); 97% (KL)
Input RPM	Up to 6,000 RPM
Installation	Requires 10.9 fasteners for tapped holes housing. See page 288 for more information
Lubrication	Lubricated for life* - standard Mobil 600XP200, option food grade Mobil SHC CIBUS 220
Mounting Position	Must be specified, (see page 123) (K); unrestricted (KL)
Warranty	5 Year Limited (2 Years on normal wear items: bearings, seals, etc.)

** Scheduled lubrication is required for some larger frame K Series units (excluding F Food Duty and B Corrosion Resistant option). See page 124 for lubrication details.*

Benefits of NEW ME Motor Adapters

- Higher torques
- Higher input speeds
- More compact with square coupling housing
- More clamp ring options, so less need for adapter bushings
- Clamp ring with roll pin

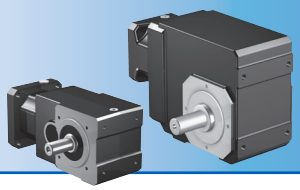

Overview

Selection Options *At-a-Glance*

Using the **Selection Data** table later in this section, select the K/KL Series Gearhead with the appropriate performance and design options tailored to your motor choice and exact application requirements. Use the part number guide below as a reference to build a part number for the complete gearhead assembly.

Part Number Examples:

1	2	3	4	5	6	7	8	9	
K	1	0	2	V	NG	0040	ME10	B	EL1 *
KL	1	0	2	P	N	0040	MQ	F	

	Design Option		Part Number Code	Description
1	**Series**		K	Right angle helical/bevel
			KL	Compact right angle helical/bevel (size 1 and 2 only)
2	**Size**		1 2 3 4 5 6 7 8 9 10	10 sizes of gearhead (KL sizes 1 and 2 only)
3	**Generation**		0 1	Version of gearhead
4	**# of Stages**		2	Two stage (determined by ratio)
			3	Three stage (determined by ratio)
			4	Four stage (determined by ratio
5	**Output**	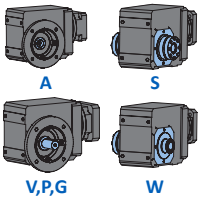 A S V,P,G W	A	Hollow bore*
			S	Shrink ring* — (specify side 3 or 4)
			V	Shaft output* — K Series only (specify side 3 and/or 4)
			P	Shaft with key* — KL Series only (specify side 3 or 4)
			G	Shaft without key* — KL Series only (specify side 3 or 4) — metric only
			W	Single or double wobble-free bushing* — KL2 & K1-8 only (If single bushing, specify side 3 or 4)
6	**Housing**	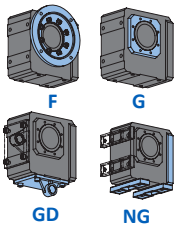 F G GD NG	F	Output Flange (Round for K series, Square for KL) (side 3 or 4 only, please specify)
			G	Pitch Circle Diameter (PCD) tapped holes
			GD	Torque arm bracket mounting — KL2 or K Series (side 1 [shown] or 5 only, also side 2 on size K1 only, please specify)
			NG	Foot mounting — (side 1 or 5 only; or side 2 on size K1, please specify)
7	**Ratio**		0040	Ratios range from 4:1 to 32:1 for KL Series and 4:1 to 381:1 for K Series (0040=4:1; 0063=6.3:1; 2700=270:1)
8	**Motor Adapter**		MQ	MQ input for KL Series
			ME10 – ME50	ME 5 input sizes for K Series (see also motor mounting plate option, page 168)
9	**Special Options**		B	Add when ordering Corrosion Resistant Duty
			F	Add when ordering Food Duty (size KL1 and 2; K1 thru K9 only)
*	**Mounting Position**		EL1 EL2 EL3 EL4 EL5 EL6	Required special instruction for all K Series units only, see page 123

Options

ME Adapter Option — K Series only

- MSS1 Seal – special input seal for longer life. Contact factory for this option.
- Peak Torque Booster – pinion securing element for shock loads, increasing peak torque up to 80%.

Lubrication Options

- Food grade or synthetic optionally available. Contact factory for this option.

Integrated Safety Brake

- ServoStop – provides dynamic braking during power failures or emergency stops in hazardous situations. Contact factory for this option.

Coating Option

- Corrosion Resistant Duty (**B** special option)
- Food Duty (**F** special option)

Food and Corrosion Resistant units are lubricated for life with double output seals (where possible), stainless output shaft, bore, or bushing, and heat cured paint.

ATEX — K Series only

- ATmosphere EXplosible – rated for explosive environments. Contact factory for this option and allow additional time for delivery.

K/KL Series Performance Overview

K/KL Series performance is dependent on several factors including duty cycle, bearing design, gearhead size and stage configuration, among others. Use the chart below for preliminary evaluation, then use the following performance chart and selection information on the following pages for specific performance sizing and selection.

			Size/Generation	KL10	KL20	K10	K20		K30		K40	
			# of Stages	2	2	2	2	3	2	3	2	3
Permissible Acceleration Torque M_{2BMAX}			Nm	32	65	135	220		385		600	
Output Torque Nom. M_{2N}			Nm	25	50	120	200		350		550	
Torsional Stiffness C_2			Nm/arcmin	≤1.8	≤3.9	≤6.8	≤11.0		≤16.0		≤31.0	
Torsional Backlash [1] $\Delta\phi$	arcmin	Standard		≤25	≤20	≤10	≤10	≤10	≤10	≤10	≤10	≤10
		Reduced		—	—	≤5	≤5	≤6	≤4	≤5	≤4	≤5
Input Speed Max. n_{1MAX}	Continuous	EL3, 4, 5, 6		4000	4000	4000	4000		3800		3600	
		EL1,2		4000	4000	4000	3900		3500		3300	
	Cyclic			6000	6000	7000	6500		6000		5500	
Efficiency (@nom torque)			%	97	97	97	97	96	97	96	97	96
Weight			kg	6.3	9.5	14.0	18.1	24.0	30.4	33.1	42.1	45.3
			lbs	14	21	31	40	53	67	73	93	100
Noise [2]			dB(A)	≤59	≤65	≤65	≤53		≤53		≤51	
Axial Load Max. F_{2AMAX}	Solid Shaft		N	280	560	1900	2100		2400		3500	
	Hollow Bore		N	250	560	1900	2100		2400		3500	
Radial Load Max. [3] F_{2RMAX}			N	1900	2800	5000	6000		7000		11,200	
Tilting Moment Max. [3] M_{2KMAX}	Solid Shaft		Nm	43	118	360	430		525		1050	
	Hollow Bore		Nm	43	118	240	310		380		740	

[1] *Tested at 1.5% of nominal torque and recorded on the output side of the gearhead. For lower backlash, contact STOBER technical support.*

[2] *Measurement at one (1) meter distance with input speed (n_1) of 1500 RPM. To calculate torque at higher input speeds, contact the factory.*

[3] *Rating based on output speed (n_2) of 20 RPM for K Series, 100 RPM for KL Series. For values at other speeds see page 126.*

KL Series for a Compact Fit

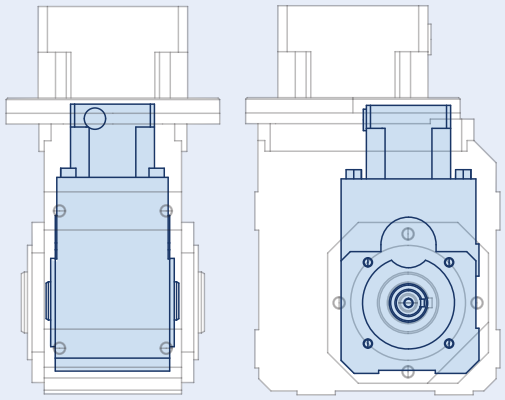

Size comparison of KL102 with K102

The STOBER KL Series is a much more compact version of the K Series. Available in 4:1 to 32:1 ratios with backlash of <16 arcmins, the KL Series offers an alternative right angle helical/bevel gearhead for smaller gearhead size applications. Like the K Series, the KL is available in hollow, solid shaft, and wobble free bushing output options.

All units are lubricated for life with synthetic oil. Food grade oil available.

K/KL Series Direction of Rotation

Output available on side 3, 4 or both. Note: With a double output, the shaft rotation of Side 3 will be the OPPOSITE direction of Side 4 when viewed from Side 5.

2 Stage	3 Stage	
K102	K513	K813
K202	K613	K913
K302	K713	K1013
K402		

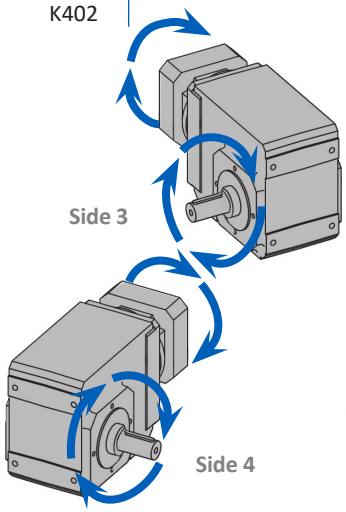

2 Stage	3 Stage	4 Stage	
KL102	K203	K514	K814
KL202	K303	K614	K914
	K403	K714	K1014

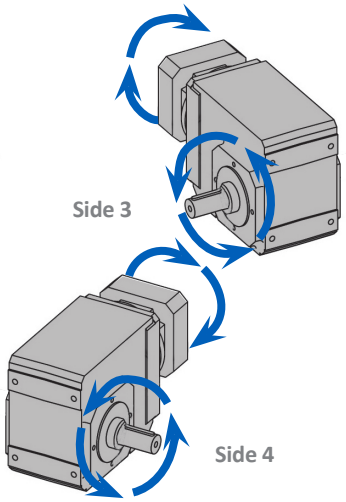

Overview

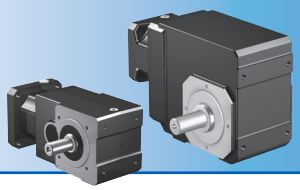

	K51		K61		K71		K81		K91		K101	
	3	4	3	4	3	4	3	4	3	4	3	4
	1000		1600		2600		4650		7700		13,200	
	900		1450		2400		4200		7000		11,893	12,000
	≤50.0		≤82.0		≤126.0		≤196.0		≤379.0		≤724.0	≤725.0
	≤10 ≤5	≤10 ≤6	≤10 ≤5	≤10 ≤6	≤10 ≤5	≤10 ≤6	≤10 ≤5	≤10 ≤6	≤10 ≤5		≤10 ≤5	
	3400		3100		2900		2800		2600		2500	
	3000		2800		2600		2500		2500		2300	
	5000		4500		4200		4000		3800		3500	
	96	94	96	94	96	94	96	94	96	94	96	94
	48.0 106	49.4 109	77.0 170	80.2 177	100.1 221	106.0 234	140.0 309	149.9 331	230.1 508	240.1 530	477.9 1055	488.8 1079
	≤61		≤61		≤59		≤65		≤65		≤65	
	3500		4000		5500		7250		16,500		25,000	
	2500		3000		4100		5300		7000		9000	
	13,450		16,000		22,000		29,000		65,000		80,000	
	1580		1960		3200		3800		11,200		15,200	
	1000		1300		2100		2600		3600		5000	

K units have the shaft on Side 3 and/or Side 4 (shown). IMPORTANT: Shaft side must be specified when ordering.

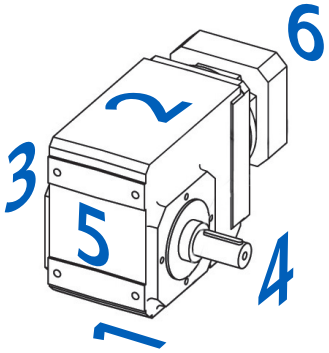

K Series Mounting Position Options

(KL units have unrestricted positioning)

When ordering, the Mounting Position MUST BE SPECIFIED using one of the Mounting Position order codes below.

Note: the code relates to the orientation side that faces down. For example, EL1 has side 1 facing down, EL2 has side 2 facing down, etc.

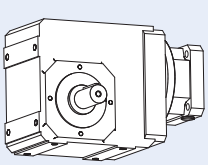

EL1

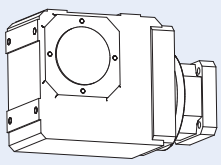

EL2

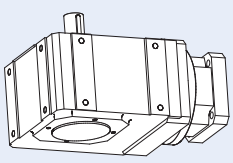

EL3

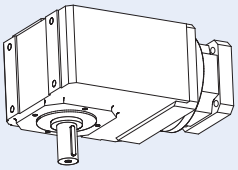

EL4

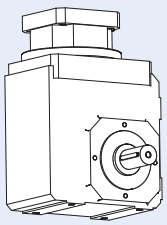

EL5

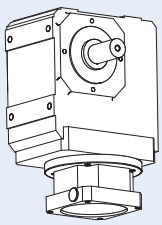

EL6

K/KL Series Motor Mounting Plate Option (Motor information required with Motor Adapter option)

STOBER Servo Gearheads fit the motor of your choice with the appropriate motor mounting plate assembled between the motor and the gearhead.

NOTE: When ordering a gearhead:

- Specify the motor manufacturer and part number
- Provide the motor drawing with dimensions, or specify the motor mounting dimensions (per the list shown at right)

For a precise dimension on a specific motor, or for general assistance, we recommend you contact STOBER Technical Support.

Customer Required Dimensions for Properly Sized Motor Mounting Plate

d2	Motor Shaft Diameter (If an adapter bushing is required it will be supplied with the motor plate.)
b6	Pilot Diameter
e6	Bolt Circle Diameter
s6	Bolt Diameter
l5	Motor Shaft Length
f6	Pilot Length
a6	Square Flange (Optional – motor plate will typically be made to match this dimension.)

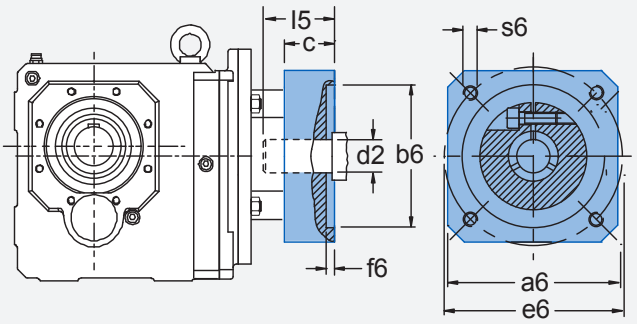

Motor Mounting Plate Dimensions — mm(Gearhead Part Number Specific)	KL1_MQ	KL2_MQ ME10	ME20	ME30	ME40	ME50
Maximum Allowed Motor Shaft Dia. d2	16	19	32	38	48	60
Minimum Allowed Motor Plate Thickness c*	15	21	24	25	33	43

** Note that the c motor plate thickness is determined by the motor shaft length. The minimum motor plate thickness is the value listed.*

K/KL Series Motor Mounting Plate Access Hole

Access to the clamping screw for the motor coupling is located on the 270° side of the motor mounting plate at the location shown. If necessary, the motor mounting plate can be rotated in the field, if a 0°, 90° or 180° orientation for the access hole is desirable.

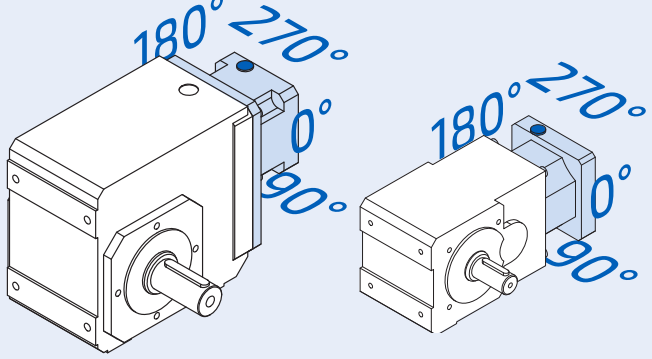

K Series KL Series

K Series Lubrication Maintenance

With STOBER reducers very little maintenance is required under normal operating conditions. Units K102 thru K403 are supplied without breathers and are lubricated for life and maintenance free. Breathers are provided on standard units K513 thru K1014, located as shown to the right*. STOBER recommends changing the lubrication in breather supplied units after 10,000 hours for normal operating conditions or every 5000 hours for wet operating conditions.

**K513/K514 and larger units with the Food & Corrosion Resistant option exclude a breather. Contact STOBER for details.*

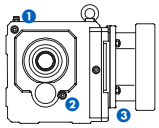

3 Stage Units
(K513 thru K1013)

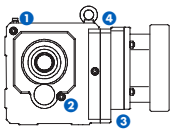

4 Stage Units
(K514 thru K1014)

Drain Plug and Vent Location

Mounting Position		1	2 *	2a *	3	4
EL1		Vent			Drain	
EL2		Drain			Vent	
EL3			Vent	Drain		
EL4			Drain	Vent		
EL5	K513-K1013	Drain			Vent	
	K514-K1014	Drain				Vent
EL6	K513-K1013	Vent			Drain	
	K514-K1014	Vent				Drain

** Position 2a is on the opposite side of 2.*

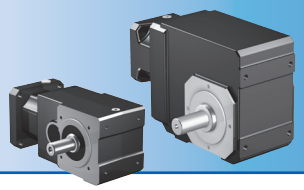

Overview

K/KL Series Output Options

Diameters in **BOLD BLUE** are configurations readily available from inventory. Contact STOBER for delivery on other output sizes.

			KL1	KL2	K1	K2	K3	K4	K5	K6	K7	K8	K9	K10
Solid Shaft	Carbon Steel	Inches	**5/8**	**3/4***	**1**	**1-1/4**	**1-1/4**	**1-3/8**	**1-3/4**	**1-3/4**	**2-3/8**	**2-7/8**	**3-5/8**	**4-3/8**
		Metric	16	20	25	30	30	40	45	50	60	70	90	—
	Stainless Steel	Inches	**5/8**	**3/4**	**1**	**1-1/4**	**1-1/4**	**1-3/8**	**1-3/4**	**1-3/4**	**2-3/8**	**2-7/8**	**3-5/8**	—
		Metric	16	20	25	—	—	—	45	—	—	—	—	—
Hollow Bore	Carbon Steel	Inches	5/8	**3/4**	**1**	**1-3/16**	**1-3/8**	**1-1/2**	**2**	**2**	**2-3/8**	**2-3/4**	**3-1/4**	**4**
		Metric	**16**	20	25	30	35	40	50	50	60	70	90	—
	Stainless Steel	Inches	5/8	**3/4**	**1**	**1-1/4**	**1-3/8**	**1-1/2**	**2**	**2**	**2-3/8**	—	2-15/16 3 3-7/16	—
		Metric	**16**	20	25	30	35	40	50	—	60	—	—	—
Wobble Free Bushing (Single and Double Bushings**)	Stainless Steel*	Inches	—	**3/4**	**1**	1 **1-3/16** **1-1/4**	1 1-3/16 **1-1/4** 1-3/8 **1-7/16** **1-1/2**	1-1/4 **1-7/16** **1-1/2**	**1-7/16** **1-1/2** **1-15/16** **2**	1-7/16 1-1/2 1-15/16 **2** 2-3/16	1-15/16 **2** **2-3/8**	2-3/16 2-3/8 **2-7/16** **2-3/4**	—	—
		Metric	—	—	—	—	—	40	40	—	—	—	—	—
Shrink Ring	Carbon Steel	Metric	**16**	**20**	**25**	**30**	**35**	**40**	**50**	**50**	**60**	**70**	**90**	**100**

** Shaft with key only (part number code P)*
***Also available in carbon steel*

K Series Standard & Optional Output Flange Sizes

Base Module	Flange Size
K1	140, 160*
K2	160, 200*
K3	160, 200*, 250
K4	250*
K5	250*
K6	300*
K7	300, 350*
K8	350 400* 450
K9	450*
K10	550*

** This is the standard flange size shipped with the unit unless otherwise specified. Optional flanges are not available for all sizes.*

Overhung Load Calculations

Pulling forces or overhung load of pulleys, sheaves, sprockets, etc. on the reducer output shaft must not exceed the allowable limits shown in the load/life/speed calculations below.

Note: Overhung load is measured at the center of the shaft extension. No overhung load is encountered when a reducer is flange mounted and/or coupling connected to another unit. However, the shafts of all components must be accurately aligned and secured to prevent pre-loading of the bearings and premature bearing failure.

Use the following formula to determine actual overhung load for a given drive:

Imperial OHL (lbs) = $\frac{126{,}000 \times HP \times K}{D \times n}$

Metric OHL (N) = $\frac{19{,}100 \times kW \times K}{D \times n}$

Where:

OHL	Overhung load (N or lbs)
HP	Horsepower
kW	Transmitted Kilowatt
D	Pitch Diameter (inches or meters) of Sprocket, Gear, Sheave, Pulley, etc.
n	Maximum Shaft RPM
K	1.00 Single Chain Drive; 1.25 Timing Belt Drive; 1.25 Spur or Helical Gear Drive; 1.50 V-Belt Drive; 2.50 Flat Belt Drive

Permissible Motor Tilting Torque

The permissible tilting torque of the motor attached to the gear unit is a result of the static and dynamic load "F" from the motor weight, mass acceleration, and vibration multiplied by the distance from the center of gravity "l_S" of the motor.

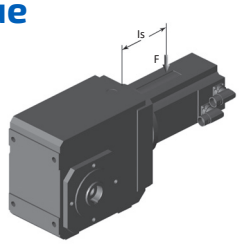

$$M_{1k} = F \times l_S \leq M_{1K}$$

M_{1K}	ME10	ME20	ME30	ME40	ME50
Nm	25	60	125	250	600

Permissible Output Shaft Load and Tilting Moments*

	P, G, V Solid Shaft Output [1]				A, S, W Hollow Output [2]		
	Z_2	F_{2A}	F_{2R}	M_{2K}	Z_2	F_{2A}	M_{2K}
Unit	mm	N	N	Nm	mm	N	Nm
KL1	20	380	1900	68	18.5	250	43
KL2	22	560	2800	118	22	560	118
K1	40	1900	5000	360	40	1900	240
K2	42	2100	6000	430	42	2100	310
K3	45	2400	7000	525	45	2400	380
K4	52	3500	11,200	1050	52	3500	740
K5	72	3500	13,450	1580	39	2500	1000
K6	72	4000	16,000	1960	42	3000	1300
K7	85	5500	22,000	3200	45	4100	2100
K8	60	7250	29,000	3800	50	5300	2600
K9	87	16,500	65,000	11,200	56	7000	3600
K10	84[3]	25,000	80,000[3]	15,200	56	9000	5000

** Refer to illustration and definitions below.*

[1] For DOUBLE output shaft: F_{2R} x 0.7

[2] Values shown for "W" Style are for double bushings. For single bushings use value M_{2K} x 0.5 and F_{2A} x 0.5

[3] Solid Shaft unit with a Flange – Z_2 value is 132mm/5.20"; F_{2R} value is 64,000N/14,400 lbs.

K/KL Series Load/Life/Speed Calculations

The permissible load and tilting moment values are based on an output speed of 20 RPM (K Series) or 100 RPM (KL Series). For higher speeds the following applies, where n_2 is the desired speed:

All formulas shown are based on METRIC values

Upper case letters are permissible values. Lower case letters are for existing values.

K Series

$$F_{2axN} = \frac{F_{2ax20}}{\sqrt[3]{\frac{n_{2m*}}{20\ rpm}}} \qquad F_{2radN} = \frac{F_{2rad20}}{\sqrt[3]{\frac{n_{2m*}}{20\ rpm}}} \qquad M_{2kN} = \frac{M_{2k20}}{\sqrt[3]{\frac{n_{2m*}}{20\ rpm}}}$$

KL Series

$$F_{2axN} = \frac{F_{2ax20}}{\sqrt[3]{\frac{n_{2m*}}{100\ rpm}}} \qquad F_{2radN} = \frac{F_{2rad20}}{\sqrt[3]{\frac{n_{2m*}}{100\ rpm}}} \qquad M_{2kN} = \frac{M_{2k20}}{\sqrt[3]{\frac{n_{2m*}}{100\ rpm}}}$$

The application output tilting moment should be determined by the following formula:

$$M_{2k*} = \frac{2 \bullet F_{2ax*} \bullet Y_2 + F_{2rad*} \bullet (x_2 + z_2)}{1000} \leq M_{2kN}$$

$$F_{2rad*} \leq F_{2radN} \qquad F_{2ax*} \leq F_{2axN}$$

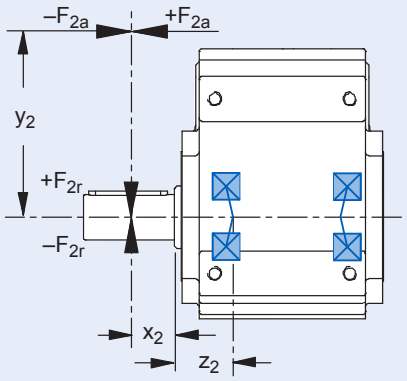

Where:

Z_2	Distance of Shaft Shoulder to Center of Output Bearing
n_2	Actual Average Output Speed
X_2	Distance of the Shaft Shoulder to the Force Application Point
Y_2	Distance of the Shaft Axis to the Axial Force Application Point
F_{2ax*}	Actual Axial Force at Gear Unit Output
F_{2ax100}	Permitted Axial Force
$F_{2rad100}$	Permitted Radial Force ≤100RPM
$F_{2rad,acc}$	Radial Acceleration Force
$F_{2rad,acc*}$	Radial Acceleration Force at Gear Unit Output
M_{2K100}	Permitted Tilting Torque ≤100RPM
$M_{2K,acc}$	Permitted Acceleration Tilting Torque
$M_{2k,acc*}$	Permitted Acceleration Tilting Torque at Gear Unit Output
C_{2K}	Tilting Stiffness

Selection Data

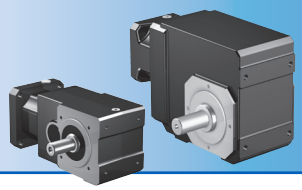

Reducer Ratio (i)		Output Torque			Backlash [3]	Part Number* (Gearhead + Input)	Maximum Input Speed RPM			Input Inertia J_1	Torsional Stiffness C2 (per arcmin)
		Nominal [1] M_{2N} ≤ 2000 RPM	Acceleration M_{2B}	Peak [2] M_{2PEAK}			Continuous		Cyclic		
Nom.	Exact	Nm	Nm	Nm	arcmin		EL 1,2,3,4	EL 5,6	All	kgcm²	Nm
KL1											
4.000	4/1	15	22	30	25	KL102_0040 MQ	3500	3500	6000	0.40	1.0
8.000	8/1	23	30	59	20	KL102_0080 MQ	3500	3500	6000	0.37	1.6
16.00	16/1	25	30	60	20	KL102_0160 MQ	4000	4000	6000	0.31	1.8
32.00	32/1	25	32	64	20	KL102_0320 MQ	4000	4000	6000	0.30	1.7
KL2											
4.000	4/1	35	50	83	20	KL202_0040 MQ	3500	3500	6000	1.00	1.8
8.000	8/1	50	60	120	16	KL202_0080 MQ	3500	3500	6000	0.89	3.5
16.00	16/1	50	60	120	16	KL202_0160 MQ	4000	4000	6000	0.66	3.9
32.00	32/1	50	65	130	16	KL202_0320 MQ	4000	4000	6000	0.64	3.2

[1] *Maximum torque for continuous input 1500 RPM - horizontal output position.*
[2] *Maximum momentary torque for emergency stops or heavy shock load. (Admissible stops per life of gearhead = 1,000 stops maximum.)*
* *Square motor adapter code (shaft diameter max - mm): For KL102 MQ (16), For KL202 MQ (19)*

Reducer Ratio (i)		Output Torque			Backlash [3]	Part Number* (Gearhead + Input)	Max. Input Speed RPM (n1)			Motor Shaft Max Ø	Input Inertia	Tors. Stiffness
		Nom. [1]	Accel.	Peak [2]			Continuous		Cyclic			
		M_{2N}	M_{2acc}	M_{2NOT}	$\Delta\phi_2$		EL 1,2	EL 3,4,5,6	All	d_{MW}	J_1	C_2
Nom.	Exact	Nm	Nm	Nm	arcmin					mm	kgcm²	Nm/ arcmin
K1												
4.000	4/1	65	93	116	12/6	K102_0040 ME10	3300	2800	5000	≤19	1.5	6.3
						K102_0040 ME20				≤24	3.4	6.6
5.568	1520/273	73	109	162	12/6	K102_0056 ME10	3300	2800	5000	≤19	1.3	6.6
						K102_0056 ME20				≤24	3.2	6.7
6.644	299/45	77	116	193	12/6	K102_0066 ME10	3600	3300	5500	≤19	1.0	6.6
						K102_0066 ME20				≤24	2.9	6.7
9.249	1748/189	86	129	240	12/6	K102_0092 ME10	3600	3300	5500	≤19	1.0	6.7
						K102_0092 ME20				≤24	2.9	
10.14	507/50	89	125	220	12/6	K102_0100 ME10	4000	3800	6000	≤19	0.8	6.7
						K102_0100 ME20	3700	3700		≤24	2.7	6.8
14.11	494/35	99	135	240	12/6	K102_0140 ME10	4000	3800	6000	≤19	0.8	6.8
						K102_0140 ME20	3700	3700		≤24	2.7	
16.71	117/7	105	125	220	12/6	K102_0165 ME10	4000	4000	7000	≤19	0.7	6.8
						K102_0165 ME20	3700	3700	6000	≤24	2.6	
20.15	403/20	110	125	220	12/6	K102_0200 ME10	4000	4000	7000	≤19	0.7	6.8
						K102_0200 ME20	3700	3700	6000	≤24	2.6	
23.27	1140/49	117	135	240	12/6	K102_0230 ME10	4000	4000	7000	≤19	0.7	6.8
						K102_0230 ME20	3700	3700	6000	≤24	2.6	
25.22	1261/50	96	115	192	12/6	K102_0250 ME10	4000	4000	7000	≤19	0.7	6.8
						K102_0250 ME20	3700	3700	6000	≤24	2.6	
28.05	589/21	120	135	240	12/6	K102_0280 ME10	4000	4000	7000	≤19	0.7	6.8
						K102_0280 ME20	3700	3700	6000	≤24	2.6	
33.71	4719/140	73	88	146	12/6	K102_0340 ME10	4000	4000	7000	≤19	0.6	6.8
35.11	3686/105	120	135	240	12/6	K102_0350 ME10	4000	4000	7000	≤19	0.7	6.8
						K102_0350 ME20	3700	3700	6000	≤24	2.6	
40.30	403/10	61	74	123	12/6	K102_0400 ME10	4000	4000	7000	≤19	0.6	6.8
46.92	2299/49	102	122	203	12/6	K102_0470 ME10	4000	4000	7000	≤19	0.6	6.8
56.10	1178/21	86	103	171	12/6	K102_0560 ME10	4000	4000	7000	≤19	0.6	6.8

[1] *Maximum torque for continuous input 1500 RPM - horizontal output position.*
[2] *Maximum momentary torque for emergency stops or heavy shock load. (Admissible stops per life of gearhead = 1,000 stops maximum.)*
[3] *Backlash shown standard/reduced*
* *Motor adapter order code (shaft diameter max - mm): ME10 (19), ME20 (32), ME30 (38), ME40 (48), ME50 (60)*

Selection Data

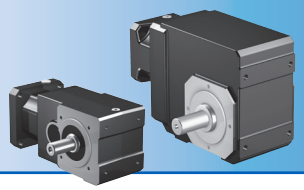

Reducer Ratio (i)		Output Torque			Backlash [3]	Part Number* (Gearhead + Input)	Max. Input Speed RPM (n1)			Motor Shaft Max Ø	Input Inertia	Tors. Stiffness
		Nom. [1]	Accel.	Peak [2]			Continuous		Cyclic			
Nom.	Exact	M_{2N}	M_{2acc}	M_{2NOT}	$\Delta\phi_2$		EL 1,2	EL 3,4,5,6	All	d_{MW}	J_1	C_2
		Nm	Nm	Nm	arcmin					mm	kgcm²	Nm/ arcmin
K2	**(continued next page)**											
4.000	4/1	116	174	291	10/5	K202_0040 ME20	3000	2600	4500	≤32	6.4	10.0
						K202_0040 ME30				≤38	12.0	
5.177	2107/407	127	190	377	10/5	K202_0052 ME20	3000	2600	4500	≤32	5.7	10.0
						K202_0052 ME30				≤38	11.0	11.0
7.118	2107/296	141	211	400	10/5	K202_0071 ME20	3000	2600	4500	≤32	5.4	11.0
						K202_0071 ME30				≤38	11.0	
8.397	2494/297	149	196	244	10/5	K202_0084 ME10	3500	3100	5000	≤19	1.4	10.0
			220	400		K202_0084 ME20				≤32	4.8	11.0
						K202_0084 ME30				≤38	10.0	
10.07	2881/286	155	220	293	10/5	K202_0100 ME10	3900	3500	5500	≤19	1.2	10.0
		158		400		K202_0100 ME20	3700			≤32	4.6	11.0
						K202_0100 ME30	3500		5000	≤38	9.9	
11.55	1247/108	166	220	336	10/5	K202_0115 ME10	3500	3100	5000	≤19	1.3	11.0
				400		K202_0115 ME20				≤32	4.7	
						K202_0115 ME30				≤38	10.0	
12.71	559/44	168	220	370	10/5	K202_0125 ME10	3900	3500	5500	≤19	1.0	11.0
		171		400		K202_0125 ME20	3700			≤32	4.4	
						K202_0125 ME30	3500		5000	≤38	9.8	
13.85	2881/208	176	220	400	10/5	K202_0140 ME10	3900	3500	5500	≤19	1.1	11.0
						K202_0140 ME20	3700			≤32	4.5	
						K202_0140 ME30	3500		5000	≤38	9.9	
17.47	559/32	190	220	400	10/5	K202_0175 ME10	3900	3500	5500	≤19	1.0	11.0
						K202_0175 ME20	3700			≤32	4.4	
						K202_0175 ME30	3500		5000	≤38	9.7	
20.33	1118/55	182	220	400	10/5	K202_0200 ME10	4000	3900	6500	≤19	0.8	11.0
		200				K202_0200 ME20	3700	3700	6000	≤24	2.7	
						K202_0200 ME30	3500	3500	5000	≤32	7.8	
25.13	1935/77	187	220	400	10/5	K202_0250 ME10	4000	3900	6500	≤19	0.8	11.0
		200				K202_0250 ME20	3700	3700	6000	≤24	2.7	
27.95	559/20	200	220	400	10/5	K202_0280 ME10	4000	3900	6500	≤19	0.8	11.0
						K202_0280 ME20	3700	3700	6000	≤24	2.7	
33.62	1849/55	154	185	308	10/5	K202_0340 ME10	4000	3900	6500	≤19	0.7	11.0
						K202_0340 ME20	3700	3700	6000	≤24	2.6	
34.55	1935/56	200	220	400	10/5	K202_0350 ME10	4000	3900	6500	≤19	0.8	11.0
						K202_0350 ME20	3700	3700	6000	≤24	2.7	
39.45	135,407/3432	200	202	253	10/6	K203_0390 ME10	4000	3900	6500	≤19	0.7	11.0

[1] *Maximum torque for continuous input 1500 RPM - horizontal output position.*
[2] *Maximum momentary torque for emergency stops or heavy shock load. (Admissible stops per life of gearhead = 1,000 stops maximum.)*
[3] *Backlash shown standard/reduced*
* *Motor adapter order code (shaft diameter max - mm): ME10 (19), ME20 (32), ME30 (38), ME40 (48), ME50 (60)*

Reducer Ratio (i)		Output Torque			Backlash [3]	Part Number* (Gearhead + Input)	Max. Input Speed RPM (n1)			Motor Shaft Max Ø	Input Inertia	Tors. Stiffness
		Nom. [1]	Accel.	Peak [2]			Continuous		Cyclic			
		M_{2N}	M_{2acc}	M_{2NOT}	$\Delta\phi_2$		EL 1,2	EL 3,4,5,6	All	d_{MW}	J_1	C_2
Nom.	Exact	Nm	Nm	Nm	arcmin					mm	kgcm²	Nm/ arcmin
K2	**(continued from previous page)**											
46.23	1849/40	200	220	400	10/5	K202_0460 ME10	4000	3900	6500	≤19	0.7	11.0
						K202_0460 ME20	3700	3700	6000	≤24	2.6	
49.76	26,273/528	200	220	319	10/6	K203_0500 ME10	4000	3900	6500	≤19	0.7	11.0
50.49	6665/132	96	116	184	10/5	K202_0500 ME10	4000	3900	6500	≤19	0.6	11.0
54.25	135,407/2496	200	220	348	10/6	K203_0540 ME10	4000	3900	6500	≤19	0.7	11.0
68.42	26,273/384	200	220	400	10/6	K203_0680 ME10	4000	3900	6500	≤19	0.7	11.0
79.62	26,273/330	200	220	394	10/6	K203_0800 ME10	4000	3900	6500	≤19	0.7	11.0
109.5	26,273/240	200	220	394	10/6	K203_1090 ME10	4000	3900	6500	≤19	0.7	11.0
135.3	30,315/224	200	220	394	10/6	K203_1350 ME10	4000	3900	6500	≤19	0.7	11.0
181.0	86,903/480	200	220	394	10/6	K203_1810 ME10	4000	3900	6500	≤19	0.7	11.0
K3	**(continued next page)**											
4.000	4/1	204	233	291	10/4	K302_0040 ME20	2700	2300	4000	≤32	9.0	16.0
			306	700		K302_0040 ME30				≤38	14.0	
5.375	43/8	225	313	391	10/4	K302_0054 ME20	2700	2300	4000	≤32	7.2	16.0
						K302_0054 ME30				≤38	13.0	
7.391	473/64	250	375	538	10/4	K302_0074 ME20	2700	2300	4000	≤32	6.7	16.0
						K302_0074 ME30				≤38	12.0	
8.444	2322/275	169	197	246	10/4	K302_0084 ME10	3200	2800	4500	≤19	2.2	16.0
		261	385	614		K302_0084 ME20				≤32	5.6	
						K302_0084 ME30				≤38	11.0	
10.14	3010/297	176	236	295	10/4	K302_0100 ME10	3500	3100	5000	≤19	1.8	16.0
		278	385	700		K302_0100 ME20				≤32	5.2	
						K302_0100 ME30				≤38	11.0	
11.61	1161/100	232	270	338	10/4	K302_0115 ME10	3200	2800	4500	≤19	2.0	16.0
		291	385	700		K302_0115 ME20				≤32	5.4	
						K302_0115 ME30				≤38	11.0	
12.58	3182/253	187	293	366	10/4	K302_0125 ME10	3500	3100	5000	≤19	1.5	16.0
		298	385	700		K302_0125 ME20				≤32	4.9	
						K302_0125 ME30				≤38	10.0	
13.94	1505/108	242	325	406	10/4	K302_0140 ME10	3500	3100	5000	≤19	1.7	16.0
		309	385	700		K302_0140 ME20				≤32	5.1	
						K302_0140 ME30				≤38	10.0	

[1] *Maximum torque for continuous input 1500 RPM - horizontal output position.*
[2] *Maximum momentary torque for emergency stops or heavy shock load. (Admissible stops per life of gearhead = 1,000 stops maximum.)*
[3] *Backlash shown standard/reduced*
* *Motor adapter order code (shaft diameter max - mm): ME10 (19), ME20 (32), ME30 (38), ME40 (48), ME50 (60)*

Selection Data

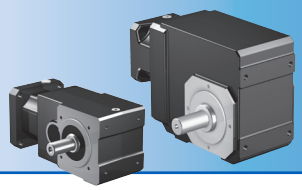

Reducer Ratio (i)		Output Torque			Backlash [3]	Part Number* (Gearhead + Input)	Max. Input Speed RPM (n1)			Motor Shaft Max Ø	Input Inertia	Tors. Stiffness
		Nom. [1]	Accel.	Peak [2]			Continuous		Cyclic			
Nom.	Exact	M_{2N}	M_{2acc}	M_{2NOT}	$\Delta\phi_2$		EL 1,2	EL 3,4,5,6	All	d_{MW}	J_1	C_2
		Nm	Nm	Nm	arcmin					mm	kgcm²	Nm/ arcmin
K3	**(continued next page)**											
16.94	559/33	198	375	469	10/4	K302_0170 ME10	3800	3500	6000	≤19	1.2	16.0
		330	385	700		K302_0170 ME20	3700			≤32	4.6	
						K302_0170 ME30	3500		5000	≤38	9.9	
17.29	1591/92	257	385	503	10/4	K302_0175 ME10	3500	3100	5000	≤19	1.4	16.0
		332		700		K302_0175 ME20				≤32	4.8	
						K302_0175 ME30				≤38	10.0	
20.28	3569/176	208	385	513	10/4	K302_0200 ME10	3800	3500	6000	≤19	1.0	16.0
		350		700		K302_0200 ME20	3700			≤32	4.4	
						K302_0200 ME30	3500		5000	≤38	9.8	
23.29	559/24	272	385	645	10/4	K302_0230 ME10	3800	3500	6000	≤19	1.1	16.0
		350		700		K302_0230 ME20	3700			≤32	4.5	
						K302_0230 ME30	3500		5000	≤38	9.8	
25.26	3612/143	211	385	602	10/4	K302_0250 ME10	3800	3500	6000	≤19	0.9	16.0
		347				K302_0250 ME20	3700			≤24	2.8	
27.88	3569/128	287	385	700	10/4	K302_0280 ME10	3800	3500	6000	≤19	1.0	16.0
		350				K302_0280 ME20	3700			≤32	4.4	
						K302_0280 ME30	3500		5000	≤38	9.7	
32.65	44,892/1375	350	379	577	10/5	K303_0330 ME20	3700	3500	6000	≤24	2.8	16.0
33.62	1849/55	219	300	501	10/4	K302_0340 ME10	3800	3500	6000	≤19	0.8	16.0
		250				K302_0340 ME20	3700			≤24	2.7	
34.73	903/26	291	385	700	10/4	K302_0350 ME10	3800	3500	6000	≤19	0.9	16.0
		350				K302_0350 ME20	3700			≤24	2.8	
39.19	34,916/891	350	385	692	10/5	K303_0390 ME20	3700	3500	6000	≤24	2.7	16.0
40.51	4902/121	193	231	385	10/4	K302_0410 ME10	3800	3500	6000	≤19	0.8	16.0
						K302_0410 ME20	3700			≤24	2.7	
44.89	11,223/250	350	385	700	10/5	K303_0450 ME20	3700	3500	6000	≤24	2.8	16.0
46.23	1849/40	301	385	688	10/4	K302_0460 ME10	3800	3500	6000	≤19	0.8	16.0
		344				K302_0460 ME20	3700			≤24	2.7	
48.63	184,556/3795	350	385	700	10/5	K303_0490 ME20	3700	3500	6000	≤24	2.7	16.0
49.26	74,777/1518	253	253	316	10/5	K303_0490 ME10	3800	3500	6000	≤19	0.7	16.0
53.88	8729/162	350	385	700	10/5	K303_0540 ME20	3700	3500	6000	≤24	2.7	16.0
55.71	2451/44	265	318	529	10/4	K302_0560 ME10	3800	3500	6000	≤19	0.8	16.0
						K302_0560 ME20	3700			≤24	2.6	

[1] *Maximum torque for continuous input 1500 RPM - horizontal output position.*
[2] *Maximum momentary torque for emergency stops or heavy shock load. (Admissible stops per life of gearhead = 1,000 stops maximum.)*
[3] *Backlash shown standard/reduced*
* *Motor adapter order code (shaft diameter max - mm): ME10 (19), ME20 (32), ME30 (38), ME40 (48), ME50 (60)*

Reducer Ratio (i)		Output Torque			Backlash [3]	Part Number* (Gearhead + Input)	Max. Input Speed RPM (n1)			Motor Shaft Max Ø	Input Inertia	Tors. Stiffness
		Nom. [1]	Accel.	Peak [2]			Continuous		Cyclic			
		M_{2N}	M_{2acc}	M_{2NOT}	$\Delta\phi_2$		EL 1,2	EL 3,4,5,6	All	d_{MW}	J_1	C_2
Nom.	Exact	Nm	Nm	Nm	arcmin					mm	kgcm²	Nm/ arcmin
K3	**(continued from previous page)**											
65.50	32,422/495	350	385	700	10/5	K303_0650 ME20	3700	3500	6000	≤24	2.7	16.0
66.87	46,139/690	350	385	700	10/5	K303_0670 ME20	3700	3500	6000	≤24	2.7	16.0
78.41	103,501/1320	350	385	700	10/5	K303_0780 ME20	3700	3500	6000	≤24	2.7	16.0
90.06	16,211/180	385	379	700	10/5	K303_0900 ME20	3700	3500	6000	≤24	2.7	16.0
107.8	103,501/960	350	385	700	10/5	K303_1080 ME20	3700	3500	6000	≤24	2.7	16.0
134.3	8729/65	350	385	700	10/5	K303_1340 ME20	3700	3500	6000	≤24	2.7	16.0
136.0	14,147/104	350	385	700	10/5	K303_1360 ME10	3800	3500	6000	≤19	0.7	16.0
178.7	53,621/300	344	385	688	10/5	K303_1790 ME20	3700	3500	6000	≤24	2.7	16.0
181.0	86,903/480	344	385	688	10/5	K303_1810 ME10	3800	3500	6000	≤19	0.7	16.0
218.2	38,399/176	265	318	529	10/5	K303_2180 ME10	3800	3500	6000	≤19	0.7	16.0
K4	**(continued next page)**											
4.000	4/1	306	459	776	10/4	K402_0040 ME30	2600	2200	3800	≤38	19.0	30.0
						K402_0040 ME40				≤48	41.0	
5.422	1849/341	338	508	1052	10/4	K402_0054 ME30	2600	2200	3800	≤38	16.0	30.0
						K402_0054 ME40				≤48	37.0	
7.456	1849/248	376	564	1100	10/4	K402_0075 ME30	2600	2200	3800	≤38	15.0	31.0
						K402_0075 ME40				≤48	36.0	
8.377	645/77	391	488	610	10/4	K402_0084 ME20	3000	2600	4500	≤32	7.0	30.0
			587	1100		K402_0084 ME30				≤38	13.0	31.0
						K402_0084 ME40				≤48	34.0	
10.10	1333/132	416	588	735	10/4	K402_0100 ME20	3400	3000	5000	≤32	6.3	30.0
			600	1100		K402_0100 ME30				≤38	12.0	31.0
						K402_0100 ME40	3000		4500	≤48	34.0	
11.52	645/56	435	600	838	10/4	K402_0115 ME20	3000	2600	4500	≤32	6.6	31.0
				1100	10/4	K402_0115 ME30				≤38	12.0	
						K402_0115 ME40				≤48	34.0	
12.66	2924/231	449	600	869	10/4	K402_0125 ME20	3400	3000	5000	≤32	5.6	31.0
				1100		K402_0125 ME30				≤38	11.0	
						K402_0125 ME40	3000		4500	≤48	33.0	
13.89	1333/96	463	600	1010	10/4	K402_0140 ME20	3400	3000	5000	≤32	6.0	31.0
				1100		K402_0140 ME30				≤38	11.0	
						K402_0140 ME40	3000		4500	≤48	33.0	

[1] *Maximum torque for continuous input 1500 RPM - horizontal output position.*
[2] *Maximum momentary torque for emergency stops or heavy shock load. (Admissible stops per life of gearhead = 1,000 stops maximum.)*
[3] *Backlash shown standard/reduced*
* *Motor adapter order code (shaft diameter max - mm): ME10 (19), ME20 (32), ME30 (38), ME40 (48), ME50 (60)*

Selection Data

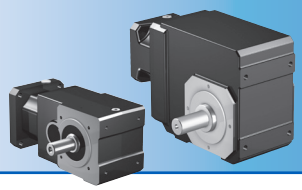

Reducer Ratio (i)		Output Torque			Backlash [3]	Part Number* (Gearhead + Input)	Max. Input Speed RPM (n1)			Motor Shaft Max Ø	Input Inertia	Tors. Stiffness
		Nom. [1]	Accel.	Peak [2]			Continuous		Cyclic			
Nom.	Exact	M_{2N}	M_{2acc}	M_{2NOT}	$\Delta\phi_2$		EL 1,2	EL 3,4,5,6	All	d_{MW}	J_1	C_2
		Nm	Nm	Nm	arcmin					mm	kgcm²	Nm/ arcmin
K4	**(continued next page)**											
17.41	731/42	499	600	1100	10/4	K402_0175 ME20	3400	3000	5000	≤32	5.4	31.0
						K402_0175 ME30				≤38	11.0	
						K402_0175 ME40	3000		4500	≤48	33.0	
20.20	1333/66	524	600	1100	10/4	K402_0200 ME20	3600	3300	5500	≤32	4.8	31.0
						K402_0200 ME30	3500		5000	≤38	10.0	
25.28	4171/165	501	600	1001	10/4	K402_0250 ME20	3600	3300	5500	≤32	4.5	31.0
						K402_0250 ME30	3500		5000	≤38	9.9	
27.77	1333/48	550	600	1100	10/4	K402_0280 ME20	3600	3300	5500	≤32	4.7	31.0
						K402_0280 ME30	3500		5000	≤38	10.0	
32.39	2494/77	458	458	572	10/5	K403_0320 ME20	3600	3300	5500	≤24	2.9	31.0
33.68	4816/143	389	467	716	10/4	K402_0340 ME20	3600	3300	5500	≤24	2.8	31.0
34.76	4171/120	550	600	1100	10/4	K402_0350 ME20	3600	3300	5500	≤32	4.5	31.0
						K402_0350 ME30	3500		5000	≤38	9.8	
39.05	38,657/990	550	552	690	10/5	K403_0390 ME20	3600	3300	5500	≤24	2.8	31.0
40.51	4902/121	308	370	616	10/4	K402_0410 ME20	3600	3300	5500	≤24	2.7	31.0
44.54	1247/28	550	600	787	10/5	K403_0450 ME20	3600	3300	5500	≤24	2.8	31.0
46.31	602/13	535	600	985	10/4	K402_0460 ME20	3600	3300	5500	≤24	2.8	31.0
53.69	38,657/720	550	600	949	10/5	K403_0540 ME20	3600	3300	5500	≤24	2.8	31.0
55.71	2451/44	424	508	847	10/4	K402_0560 ME20	3600	3300	5500	≤24	2.7	31.0
78.10	38,657/495	550	600	1100	10/5	K403_0780 ME20	3600	3300	5500	≤24	2.7	31.0
107.4	38,657/360	550	600	1100	10/5	K403_1070 ME20	3600	3300	5500	≤24	2.7	31.0
134.4	120,959/900	550	600	1100	10/5	K403_1340 ME20	3600	3300	5500	≤24	2.7	31.0
136.1	196,037/1440	550	600	807	10/5	K403_1360 ME10	3600	3300	5500	≤19	0.7	31.0
179.1	34,916/195	535	600	985	10/5	K403_1790 ME20	3600	3300	5500	≤24	2.7	31.0
181.4	14,147/78	535	600	985	10/5	K403_1810 ME10	3600	3300	5500	≤19	0.7	31.0
215.4	23,693/110	424	508	847	10/5	K403_2150 ME20	3600	3300	5500	≤24	2.7	31.0
218.2	38,399/176	424	508	847	10/5	K403_2180 ME10	3600	3300	5500	≤19	0.7	31.0

[1] *Maximum torque for continuous input 1500 RPM - horizontal output position.*
[2] *Maximum momentary torque for emergency stops or heavy shock load. (Admissible stops per life of gearhead = 1,000 stops maximum.)*
[3] *Backlash shown standard/reduced*
* *Motor adapter order code (shaft diameter max - mm): ME10 (19), ME20 (32), ME30 (38), ME40 (48), ME50 (60)*

Reducer Ratio (i)		Output Torque			Backlash [3]	Part Number* (Gearhead + Input)	Max. Input Speed RPM (n1)			Motor Shaft Max Ø	Input Inertia	Tors. Stiffness
		Nom. [1]	Accel.	Peak [2]			Continuous		Cyclic			
		M_{2N}	M_{2acc}	M_{2NOT}	$\Delta\phi_2$					d_{MW}	J_1	C_2
Nom.	Exact	Nm	Nm	Nm	arcmin		EL 1,2	EL 3,4,5,6	All	mm	kgcm²	Nm/ arcmin
K5	**(continued next page)**											
7.347	551/75	694	1000	1405	10/5	K513_0073 ME30	1900	1800	3200	≤38	25.0	49.0
						K513_0073 ME40				≤48	47.0	
8.134	17,081/2100	718	1000	1555	10/5	K513_0081 ME30	1900	1800	3200	≤38	24.0	49.0
						K513_0081 ME40				≤48	46.0	
11.57	10,759/930	808	1000	1800	10/5	K513_0115 ME30	2300	2200	3600	≤38	17.0	49.0
						K513_0115 ME40				≤48	39.0	
12.81	1537/120	836	1000	1800	10/5	K513_0130 ME30	2300	2200	3600	≤38	17.0	49.0
						K513_0130 ME40				≤48	39.0	
17.48	6293/360	899	1000	1253	10/5	K513_0175 ME20	2800	2500	4200	≤32	8.4	49.0
		900		1800		K513_0175 ME30				≤38	14.0	
						K513_0175 ME40				≤48	36.0	
19.35	27,869/1440	900	1000	1387	10/5	K513_0195 ME20	2800	2500	4200	≤32	8.1	49.0
				1800		K513_0195 ME30				≤38	14.0	
						K513_0195 ME40				≤48	35.0	
29.18	4669/160	900	1000	1656	10/5	K513_0290 ME20	3400	3000	5000	≤32	6.0	49.0
				1800		K513_0290 ME30				≤38	12.0	
						K513_0290 ME40	3000		4500	≤48	33.0	
32.31	20,677/640	900	1000	1800	10/5	K513_0320 ME20	3400	3000	5000	≤32	5.9	49.0
						K513_0320 ME30				≤38	11.0	
						K513_0320 ME40	3000		4500	≤48	33.0	
34.80	174/5	900	1000	1781	10/5	K513_0350 ME20	3400	3000	5000	≤32	5.6	49.0
						K513_0350 ME30				≤38	11.0	
38.53	2697/70	900	1000	1800	10/5	K513_0390 ME20	3400	3000	5000	≤32	5.5	49.0
						K513_0390 ME30				≤38	11.0	
58.30	11,368/195	900	1000	1800	10/5	K513_0580 ME20	3400	3000	5000	≤32	4.7	49.0
						K513_0580 ME30				≤38	10.0	50.0
64.54	12,586/195	900	1000	1800	10/5	K513_0650 ME20	3400	3000	5000	≤32	4.6	49.0
						K513_0650 ME30				≤38	10.0	50.0
70.08	841/12	821	985	1261	10/5	K513_0700 ME20	3400	3000	5000	≤24	3.0	49.0
77.59	26,071/336	900	1000	1396	10/5	K513_0780 ME20	3400	3000	5000	≤24	3.0	49.0
112.8	135,401/1200	900	1000	1656	10/6	K514_1130 ME20	3400	3000	5000	≤24	2.8	50.0
124.9	599,633/4800	900	1000	1800	10/6	K514_1250 ME20	3400	3000	5000	≤24	2.8	50.0
134.6	3364/25	900	1000	1781	10/6	K514_1350 ME20	3400	3000	5000	≤24	2.8	50.0

[1] *Maximum torque for continuous input 1500 RPM - horizontal output position.*
[2] *Maximum momentary torque for emergency stops or heavy shock load. (Admissible stops per life of gearhead = 1,000 stops maximum.)*
[3] *Backlash shown standard/reduced*
* *Motor adapter order code (shaft diameter max - mm): ME10 (19), ME20 (32), ME30 (38), ME40 (48), ME50 (60)*

Selection Data

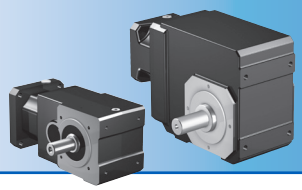

Reducer Ratio (i)		Output Torque			Backlash [3]	Part Number* (Gearhead + Input)	Max. Input Speed RPM (n1)			Motor Shaft Max Ø	Input Inertia	Tors. Stiffness
		Nom. [1]	Accel.	Peak [2]			Continuous		Cyclic			
Nom.	Exact	M_{2N}	M_{2acc}	M_{2NOT}	$\Delta\phi_2$		EL 1,2	EL 3,4,5,6	All	d_{MW}	J_1	C_2
		Nm	Nm	Nm	arcmin					mm	kgcm²	Nm/ arcmin
K5	**(continued from previous page)**											
149.0	26,071/175	900	1000	1800	10/6	K514_1490 ME20	3400	3000	5000	≤24	2.8	50.0
225.4	659,344/2925	900	1000	1800	10/6	K514_2250 ME20	3400	3000	5000	≤24	2.7	50.0
249.6	729,988/2925	900	1000	1800	10/6	K514_2500 ME20	3400	3000	5000	≤24	2.7	50.0
271.0	24,389/90	821	985	1261	10/6	K514_2710 ME20	3400	3000	5000	≤24	2.7	50.0
300.0	756,059/2520	900	1000	1396	10/6	K514_3000 ME20	3400	3000	5000	≤24	2.7	50.0
K6	**(continued next page)**											
7.323	19,215/2624	916	1120	1400	10/5	K613_0073 ME30	1800	1700	3000	≤38	39.0	81.0
			1375	2625		K613_0073 ME40				≤48	61.0	
						K613_0073 ME50				≤60	89.0	
8.107	85,095/10,496	948	1240	1550	10/5	K613_0081 ME30	1800	1700	3000	≤38	36.0	81.0
			1422	2900		K613_0081 ME40				≤48	59.0	
						K613_0081 ME50				≤60	87.0	82.0
11.41	22,631/1984	1062	1594	2181	10/5	K613_0115 ME30	2200	2000	3500	≤38	25.0	82.0
						K613_0115 ME40				≤48	46.0	
						K613_0115 ME50				≤60	75.0	
12.63	3233/256	1099	1600	2414	10/5	K613_0125 ME30	2200	2000	3500	≤38	24.0	82.0
						K613_0125 ME40				≤48	45.0	
						K613_0125 ME50				≤60	75.0	
17.16	549/32	984	984	1229	10/5	K613_0170 ME20	2600	2300	4000	≤32	12.0	82.0
		1217	1600	2900		K613_0170 ME30				≤38	18.0	
						K613_0170 ME40				≤48	39.0	
						K613_0170 ME50	2500			≤60	69.0	
18.99	17,019/896	1089	1089	1361	10/5	K613_0190 ME20	2600	2300	4000	≤32	12.0	82.0
		1259	1600	2900		K613_0190 ME30				≤38	17.0	
						K613_0190 ME40				≤48	39.0	
						K613_0190 ME50	2500			≤60	68.0	
28.77	29,463/1024	1169	1448	1809	10/5	K613_0290 ME20	3100	2800	4500	≤32	7.8	82.0
		1446	1600	2900		K613_0290 ME30				≤38	13.0	
						K613_0290 ME40	3000			≤48	35.0	
						K613_0290 ME50	2500	2500	4000	≤60	64.0	

[1] *Maximum torque for continuous input 1500 RPM - horizontal output position.*
[2] *Maximum momentary torque for emergency stops or heavy shock load. (Admissible stops per life of gearhead = 1,000 stops maximum.)*
[3] *Backlash shown standard/reduced*
* *Motor adapter order code (shaft diameter max - mm): ME10 (19), ME20 (32), ME30 (38), ME40 (48), ME50 (60)*

Reducer Ratio (i)		Output Torque			Backlash [3]	Part Number* (Gearhead + Input)	Max. Input Speed RPM (n1)			Motor Shaft Max Ø	Input Inertia	Tors. Stiffness
		Nom. [1]	Accel.	Peak [2]			Continuous		Cyclic			
		M_{2N}	M_{2acc}	M_{2NOT}	$\Delta\phi_2$		EL 1,2	EL 3,4,5,6	All	d_{MW}	J_1	C_2
Nom.	Exact	Nm	Nm	Nm	arcmin					mm	kgcm²	Nm/ arcmin
K6	**(continued from previous page)**											
31.86	130,479/4096	1294	1600	2003	10/5	K613_0320 ME20	3100	2800	4500	≤32	7.6	82.0
		1450		2900		K613_0320 ME30				≤38	13.0	
						K613_0320 ME40	3000			≤48	35.0	
						K613_0320 ME50	2500	2500	4000	≤60	64.0	
43.11	8967/208	1227	1600	2072	10/5	K613_0430 ME20	3100	2800	4500	≤32	6.0	82.0
		1450				K613_0430 ME30				≤38	11.0	
47.73	39,711/832	1359	1600	2294	10/5	K613_0480 ME20	3100	2800	4500	≤32	5.9	82.0
		1450				K613_0480 ME30				≤38	11.0	
68.77	28,609/416	1311	1577	2628	10/5	K613_0690 ME20	3100	2800	4500	≤32	4.9	82.0
		1314				K613_0690 ME30				≤38	10.0	
76.14	126,697/1664	1450	1600	2900	10/5	K613_0760 ME20	3100	2800	4500	≤32	4.9	82.0
						K613_0760 ME30				≤38	10.0	
111.3	284,809/2560	1448	1448	1809	10/6	K614_1110 ME20	3100	2800	4500	≤24	2.9	82.0
123.2	1,261,297/10,240	1450	1600	2003	10/6	K614_1230 ME20	3100	2800	4500	≤24	2.9	82.0
166.7	86,681/520	1450	1600	2072	10/6	K614_1670 ME20	3100	2800	4500	≤24	2.8	83.0
184.6	383,873/2080	1450	1600	2294	10/6	K614_1850 ME20	3100	2800	4500	≤24	2.8	83.0
265.9	829,661/3120	1314	1577	2628	10/6	K614_2660 ME20	3100	2800	4500	≤24	2.8	83.0
294.4	3,674,213/12,480	1450	1600	2900	10/6	K614_2940 ME20	3100	2800	4500	≤24	2.7	83.0
K7	**(continued next page)**											
7.563	19,845/2624	1516	2169	2712	10/5	K713_0076 ME40	1700	1600	2700	≤48	91.0	122.0
						K713_0076 ME50				≤60	119.0	123.0
8.373	87,885/10,496	1568	2353	3002	10/5	K713_0084 ME40	1700	1600	2700	≤48	87.0	123.0
						K713_0084 ME50				≤60	115.0	124.0
11.78	23,373/1984	1477	1802	2252	10/5	K713_0120 ME30	2000	1900	3200	≤38	40.0	124.0
		1758	2600	4223		K713_0120 ME40				≤48	63.0	
						K713_0120 ME50				≤60	91.0	125.0
13.04	3339/256	1636	1995	2493	10/5	K713_0130 ME30	2000	1900	3200	≤38	39.0	124.0
		1818	2600	4675		K713_0130 ME40				≤48	61.0	
						K713_0130 ME50				≤60	89.0	125.0
18.28	26,901/1472	1719	2562	3202	10/5	K713_0185 ME30	2400	2200	3600	≤38	26.0	125.0
		2034	2600	4800		K713_0185 ME40				≤48	49.0	
						K713_0185 ME50				≤60	77.0	

[1] *Maximum torque for continuous input 1500 RPM - horizontal output position.*
[2] *Maximum momentary torque for emergency stops or heavy shock load. (Admissible stops per life of gearhead = 1,000 stops maximum.)*
[3] *Backlash shown standard/reduced*
* *Motor adapter order code (shaft diameter max - mm): ME10 (19), ME20 (32), ME30 (38), ME40 (48), ME50 (60)*

Selection Data

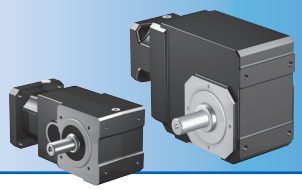

Reducer Ratio (i)		Output Torque			Backlash [3]	Part Number* (Gearhead + Input)	Max. Input Speed RPM (n1)			Motor Shaft Max Ø	Input Inertia	Tors. Stiffness
		Nom. [1]	Accel.	Peak [2]			Continuous		Cyclic			
Nom.	Exact	M_{2N}	M_{2acc}	M_{2NOT}	$\Delta\phi_2$		EL 1,2	EL 3,4,5,6	All	d_{MW}	J_1	C_2
		Nm	Nm	Nm	arcmin					mm	kgcm²	Nm/ arcmin
K7	**(continued from previous page)**											
20.23	119,133/5888	1903	2600	3545	10/5	K713_0200 ME30	2400	2200	3600	≤38	26.0	125.0
		2105		4800		K713_0200 ME40				≤48	48.0	
						K713_0200 ME50				≤60	76.0	
29.29	7497/256	1934	2600	4087	10/5	K713_0290 ME30	2900	2600	4200	≤38	18.0	125.0
		2381		4800		K713_0290 ME40				≤48	40.0	
						K713_0290 ME50	2500	2500	4000	≤60	68.0	
32.42	33,201/1024	2141	2600	4524	10/5	K713_0320 ME30	2900	2600	4200	≤38	17.0	125.0
		2400		4800		K713_0320 ME40				≤48	40.0	
						K713_0320 ME50	2500	2500	4000	≤60	68.0	
45.05	37,485/832	2082	2600	4800	10/5	K713_0450 ME30	2900	2600	4200	≤38	14.0	126.0
		2400				K713_0450 ME40				≤48	35.0	125.0
						K713_0450 ME50	2500	2500	4000	≤60	64.0	126.0
49.88	166,005/3328	2306	2600	4800	10/5	K713_0500 ME30	2900	2600	4200	≤38	13.0	126.0
		2400				K713_0500 ME40				≤48	35.0	
						K713_0500 ME50	2500	2500	4000	≤60	64.0	
71.20	4557/64	2173	2283	2884	10/5	K713_0710 ME30	2900	2600	4200	≤38	11.0	126.0
78.83	20,181/256	2400	2528	3160	10/5	K713_0790 ME30	2900	2600	4200	≤38	11.0	126.0
114.7	117,453/1024	2400	2600	4087	10/6	K714_1150 ME30	2900	2600	4200	≤38	10.0	126.0
127.0	520,149/4096	2400	2600	4524	10/6	K714_1270 ME30	2900	2600	4200	≤38	10.0	126.0
174.2	72,471/416	1751	1751	2189	10/6	K714_1740 ME20	2900	2600	4200	≤24	3.0	126.0
176.5	587,265/3328	2400	2600	4800	10/6	K714_1760 ME30	2900	2600	4200	≤38	10.0	126.0
192.9	320,943/1664	1938	1938	2423	10/6	K714_1930 ME20	2900	2600	4200	≤24	3.0	126.0
195.4	2,600,745/13,312	2400	2600	4800	10/6	K714_1950 ME30	2900	2600	4200	≤38	10.0	126.0
275.3	44,051/160	2173	2283	2854	10/6	K714_2750 ME20	2900	2600	4200	≤24	2.8	126.0
304.8	195,083/640	2400	2528	3160	10/6	K714_3050 ME20	2900	2600	4200	≤24	2.8	126.0

[1] *Maximum torque for continuous input 1500 RPM - horizontal output position.*
[2] *Maximum momentary torque for emergency stops or heavy shock load. (Admissible stops per life of gearhead = 1,000 stops maximum.)*
[3] *Backlash shown standard/reduced*
* *Motor adapter order code (shaft diameter max - mm): ME10 (19), ME20 (32), ME30 (38), ME40 (48), ME50 (60)*

Reducer Ratio (i)		Output Torque			Backlash [3]	Part Number* (Gearhead + Input)	Max. Input Speed RPM (n1)			Motor Shaft Max Ø	Input Inertia	Tors. Stiffness
		Nom. [1]	Accel.	Peak [2]			Continuous		Cyclic			
		M_{2N}	M_{2acc}	M_{2NOT}	$\Delta\phi_2$					d_{MW}	J_1	C_2
Nom.	Exact	Nm	Nm	Nm	arcmin		EL 1,2	EL 3,4,5,6	All	mm	kgcm²	Nm/ arcmin
K8	**(continued next page)**											
7.445	3127/420	2135	2135	2669	10/5	K813_0074 ME40	1600	1500	2600	≤48	174.0	187.0
						K813_0074 ME50				≤60	202.0	191.0
8.243	96,937/11,760	2364	2364	2955	10/5	K813_0082 ME40	1600	1500	2600	≤48	161.0	189.0
						K813_0082 ME50				≤60	189.0	192.0
14.84	9499/640	3286	4255	5318	10/5	K813_0150 ME40	1900	1800	3000	≤48	82.0	194.0
						K813_0150 ME50				≤60	110.0	195.0
16.43	42,067/2560	3399	4650	5888	10/5	K813_0165 ME40	1900	1800	3000	≤48	79.0	194.0
						K813_0165 ME50				≤60	106.0	195.0
23.04	31,801/1380	2153	3133	3917	10/5	K813_0230 ME30	2300	2100	3500	≤38	36.0	195.0
		3805	4650	8259		K813_0230 ME40				≤48	58.0	
						K813_0230 ME50				≤60	86.0	196.0
25.51	140,833/5520	2383	3469	4337	10/5	K813_0260 ME30	2300	2100	3500	≤38	35.0	195.0
		3936	4650	8400		K813_0260 ME40				≤48	57.0	196.0
						K813_0260 ME50				≤60	85.0	
36.14	2891/80	2370	3885	4856	10/5	K813_0360 ME30	2800	2500	4000	≤38	22.0	196.0
		4200	4650	8400		K813_0360 ME40				≤48	45.0	
						K813_0360 ME50	2500			≤60	73.0	
40.01	12,803/320	2624	4302	5377	10/5	K813_0400 ME30	2800	2500	4000	≤38	22.0	196.0
		4200	4650	8400		K813_0400 ME40				≤48	44.0	
						K813_0400 ME50	2500			≤60	72.0	
59.08	42,539/720	2560	4650	6388	10/5	K813_0590 ME30	2800	2500	4000	≤38	15.0	196.0
		4200				K813_0590 ME40				≤48	37.0	
						K813_0590 ME50	2500			≤60	66.0	
65.41	188,387/2880	2835	4650	7073	10/5	K813_0650 ME30	2800	2500	4000	≤38	15.0	196.0
		4200				K813_0650 ME40				≤48	37.0	
						K813_0650 ME50	2500			≤60	66.0	
71.70	10,325/144	2638	4327	7026	10/5	K813_0720 ME30	2800	2500	4000	≤38	13.0	196.0
		3606				K813_0720 ME40				≤48	35.0	
						K813_0720 ME50	2500			≤60	64.0	
79.38	45,725/576	2920	4650	7779	10/5	K813_0790 ME30	2800	2500	4000	≤38	13.0	196.0
		3993				K813_0790 ME40				≤48	35.0	
						K813_0790 ME50	2500			≤60	64.0	
88.89	40,887/460	4200	4650	8259	10/6	K814_0890 ME40	2800	2500	4000	≤48	35.0	196.0

[1] *Maximum torque for continuous input 1500 RPM - horizontal output position.*
[2] *Maximum momentary torque for emergency stops or heavy shock load. (Admissible stops per life of gearhead = 1,000 stops maximum.)*
[3] *Backlash shown standard/reduced*
* *Motor adapter order code (shaft diameter max - mm): ME10 (19), ME20 (32), ME30 (38), ME40 (48), ME50 (60)*

Selection Data

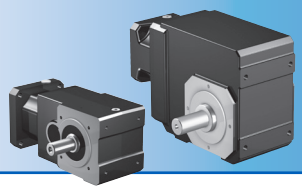

Reducer Ratio (i)		Output Torque			Backlash [3]	Part Number* (Gearhead + Input)	Max. Input Speed RPM (n1)			Motor Shaft Max Ø	Input Inertia	Tors. Stiffness
		Nom. [1]	Accel.	Peak [2]			Continuous		Cyclic			
Nom.	Exact	M_{2N}	M_{2acc}	M_{2NOT}	$\Delta\phi_2$		EL 1,2	EL 3,4,5,6	All	d_{MW}	J_1	C_2
		Nm	Nm	Nm	arcmin					mm	kgcm²	Nm/ arcmin
K8	**(continued from previous page)**											
98.41	181,071/1840	4200	4650	8400	10/6	K814_0980 ME40	2800	2500	4000	≤48	35.0	196.0
139.4	11,151/80	4200	4650	8400	10/6	K814_1390 ME40	2800	2500	4000	≤48	34.0	196.0
141.5	135,877/960	3832	3885	4856	10/6	K814_1420 ME30	2800	2500	4000	≤38	11.0	196.0
154.3	49,383/320	4200	4650	8400	10/6	K814_1540 ME40	2800	2500	4000	≤48	34.0	196.0
156.7	601,741/3840	4200	4302	5377	10/6	K814_1570 ME30	2800	2500	4000	≤38	11.0	196.0
227.9	18,231/80	4200	4650	6388	10/6	K814_2280 ME40	2800	2500	4000	≤48	33.0	196.0
252.3	565,161/2240	4200	4650	7073	10/6	K814_2520 ME40	2800	2500	4000	≤48	33.0	196.0
256.2	8,854,189/34,560	4200	4650	7073	10/6	K814_2560 ME30	2800	2500	4000	≤38	10.0	196.0
276.6	4425/16	3606	4327	7026	10/6	K814_2770 ME40	2800	2500	4000	≤48	33.0	196.0
280.8	485,275/1728	3606	4327	7026	10/6	K814_2810 ME30	2800	2500	4000	≤38	10.0	196.0
306.2	137,175/448	3993	4650	7779	10/6	K814_3060 ME40	2800	2500	4000	≤48	33.0	196.0
310.9	2,149,075/6912	3993	4650	7779	10/6	K814_3110 ME30	2800	2500	4000	≤38	10.0	196.0
K9	**(continued next page)**											
12.53	73,749/5888	3592	3592	4490	10/5	K913_0125 ME40	1800	1800	2800	≤48	190.0	367.0
						K913_0125 ME50				≤60	218.0	372.0
19.06	305/16	4955	5466	6833	10/5	K913_0190 ME40	2200	2100	3300	≤48	117.0	374.0
		5466				K913_0190 ME50				≤60	145.0	376.0
23.94	88,877/3712	5252	6864	8580	10/5	K913_0240 ME40	2200	2100	3300	≤48	93.0	376.0
		6867				K913_0240 ME50				≤60	121.0	377.0
32.12	47,275/1472	5621	7700	11511	10/5	K913_0320 ME40	2600	2500	3800	≤48	71.0	377.0
		7000				K913_0320 ME50	2500			≤60	99.0	378.0
38.04	194,773/5120	5807	7700	12504	10/5	K913_0380 ME40	2600	2500	3800	≤48	62.0	378.0
		7000				K913_0380 ME50	2500			≤60	90.0	
48.94	100,223/2048	5999	7700	13787	10/5	K913_0490 ME40	2600	2500	3800	≤48	52.0	378.0
		7000				K913_0490 ME50	2500			≤60	80.0	379.0
63.07	209,901/3328	6229	7700	14000	10/5	K913_0630 ME40	2600	2500	3800	≤48	45.0	379.0
		7000				K913_0630 ME50	2500			≤60	73.0	
75.00	62,403/832	6422	6820	8525	10/5	K913_0750 ME40	2600	2500	3800	≤48	41.0	379.0
		6822				K913_0750 ME50	2500			≤60	70.0	
92.35	2,399,679/25,984	6864	6864	8580	10/5	K914_0920 ME40	2600	2500	3800	≤48	37.0	379.0
123.9	1,276,425/10,304	7000	7700	11511	10/5	K914_1240 ME40	2600	2500	3800	≤48	36.0	379.0
125.8	2,221,925/17,664	3837	3883	4854	10/5	K914_1260 ME30	2600	2500	3800	≤38	12.0	379.0

[1] *Maximum torque for continuous input 1500 RPM - horizontal output position.*
[2] *Maximum momentary torque for emergency stops or heavy shock load. (Admissible stops per life of gearhead = 1,000 stops maximum.)*
[3] *Backlash shown standard/reduced*
* *Motor adapter order code (shaft diameter max - mm): ME10 (19), ME20 (32), ME30 (38), ME40 (48), ME50 (60)*

Reducer Ratio (i)		Output Torque			Backlash [3]	Part Number* (Gearhead + Input)	Max. Input Speed RPM (n1)			Motor Shaft Max Ø	Input Inertia	Tors. Stiffness
		Nom. [1]	Accel.	Peak [2]			Continuous		Cyclic			
Nom.	Exact	M_{2N}	M_{2acc}	M_{2NOT}	$\Delta\phi_2$		EL 1,2	EL 3,4,5,6	All	d_{MW}	J_1	C_2
		Nm	Nm	Nm	arcmin					mm	kgcm²	Nm/ arcmin
K9	**(continued from previous page)**											
146.7	5,258,871/35,840	7000	7700	12504	10/5	K914_1470 ME40	2600	2500	3800	≤48	35.0	379.0
149.0	9,154,331/61,440	4545	4600	5750	10/5	K914_1490 ME30	2600	2500	3800	≤38	12.0	379.0
188.8	2,706,021/14,336	7000	7700	13787	10/5	K914_1890 ME40	2600	2500	3800	≤48	34.0	379.0
191.7	4,710,481/24,576	5073	5073	6341	10/5	K914_1920 ME30	2600	2500	3800	≤38	11.0	379.0
243.3	5,667,327/23,296	7000	7700	14000	10/5	K914_2430 ME40	2600	2500	3800	≤48	34.0	379.0
247.0	3,288,449/13,312	5474	5731	7164	10/5	K914_2470 ME30	2600	2500	3800	≤38	11.0	379.0
293.8	977,647/3328	5704	6820	8525	10/5	K914_2940 ME30	2600	2500	3800	≤38	10.0	379.0
K10												
38.60	8029/208	9066	10621	13276	10/5	K1013_0390 ME50	2500	2300	3500	≤60	126.0	722.0
61.55	12,803/208	9696	12750	15937	10/5	K1013_0620 ME50	2500	2300	3500	≤60	91.0	724.0
75.28	101,773/1352	9807	13200	19578	10/5	K1013_0750 ME50	2500	2300	3500	≤60	82.0	724.0
123.7	7,359,555/59,488	12000	13200	24000	10/5	K1014_1240 ME50	2500	2300	3500	≤60	69.0	724.0
148.9	30,969/208	9417	10621	13276	10/5	K1014_1490 ME40	2500	2300	3500	≤48	38.0	724.0
151.4	409,479/2704	12000	13200	24000	10/5	K1014_1510 ME50	2500	2300	3500	≤60	67.0	724.0
237.4	49,383/208	10425	12750	15937	10/5	K1014_2370 ME40	2500	2300	3500	≤48	35.0	725.0
290.4	392,553/1352	10727	13200	19578	10/5	K1014_2900 ME40	2500	2300	3500	≤48	35.0	725.0

[1] *Maximum torque for continuous input 1500 RPM - horizontal output position.*
[2] *Maximum momentary torque for emergency stops or heavy shock load. (Admissible stops per life of gearhead = 1,000 stops maximum.)*
[3] *Backlash shown standard/reduced*
* *Motor adapter order code (shaft diameter max - mm): ME10 (19), ME20 (32), ME30 (38), ME40 (48), ME50 (60)*

Notes

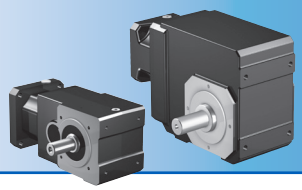

KL Series with "P" or "G" Solid Shaft Output Option

"F" Output Flange Housing Option

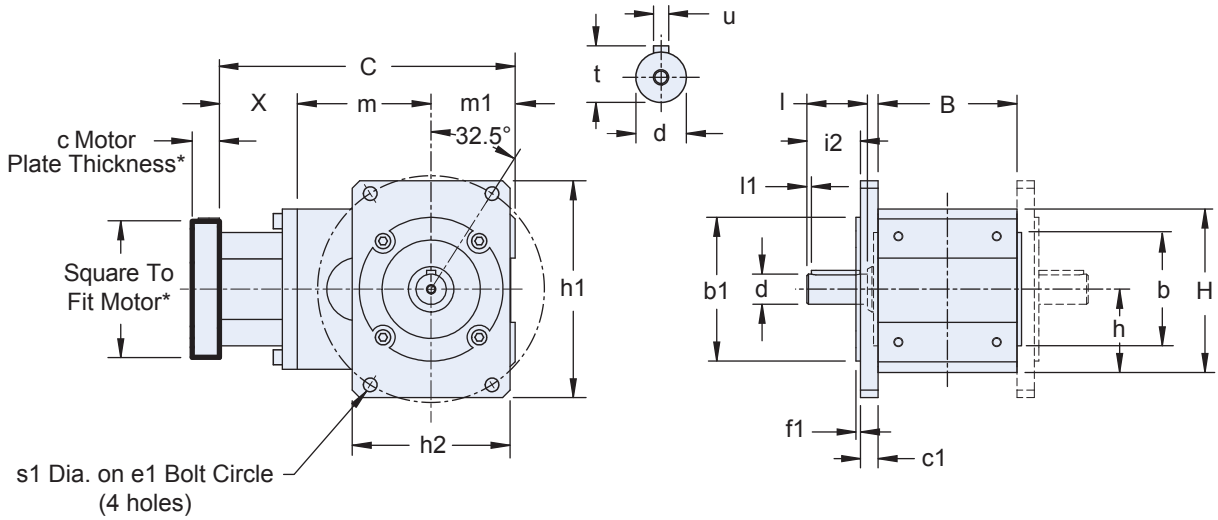

** See Motor Mounting Plate Option, page 124 for details.*
*** See Output Shaft Options, page xx for details.*

Table 1 KL Series Unit Dimensions (mm) – "F" Round Flange Housing Option

Unit	B	b1	b	C	c1	e1	f1	H	h	h1	h2	i2	l	l1	m	m1	s1	X
KL1	75	60_{j6}	60_{j6}	160	11.5	130	3	90	46	128.5	88.5	26.5	32	3	67.5	46	9	46.5
KL2	92	95_{j6}	75_{j6}	195	11.5	150	3	108	55	143.5	104.5	35.5	40	3	88.5	55	9	51.5

Table 2 Standard "P" Solid Shaft

Unit	Shaft – inches			Metric Shaft – mm			Stainless Shaft		Wt.* lbs.
	d_{k6}	u – Key	t	d_{k6}	u – Key	t	Inches	mm	
KL1	5/8	3/16 x 3/16 x 1	0.709	16	M5 x 5 x 22	18	5/8	16	14
KL2	0.750	3/16 x 3/16 x 1-1/4	0.832	20	M6 x 6 x 32	23	0.750	20	21

**Weight is approximate.*

k6 = existing values

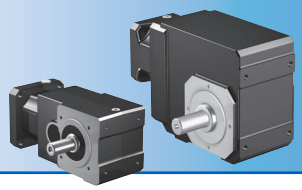

Dimensional Data

KL Series with "P" or "G" Solid Shaft Output Option

"NG" Foot Mounting Housing Option

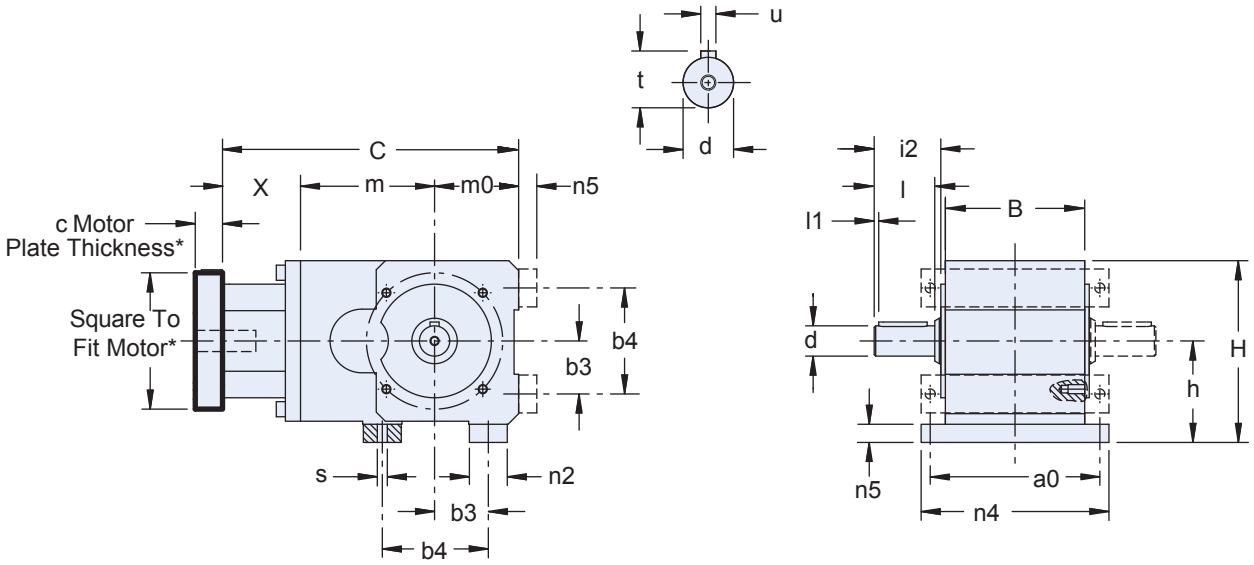

** See Motor Mounting Plate Option, page 124 for details.*
*** See Output Shaft Options, page xx for details.*

Table 1 KL Series Unit Dimensions (mm) – "NG" Foot Mounting Housing Option

Unit	a0	B	b3	b4	C	H	h	l	l1	l2	m	m0	n2	n4	n5	s	X
KL1	95	75	27.5	55	160	102	58	32	3	38	67.5	46	20	107	12	6.6	46.5
KL2	112	92	35	70	195	120	67	40	3	47	88.5	55	25	124	12	6.6	51.5

Table 2 Standard "P" Solid Shaft

Unit	Shaft – inches			Metric Shaft – mm			Stainless Shaft		Wt.* lbs.
	d_{k6}	u – Key	t	d_{k6}	u – Key	t	Inches	mm	
KL1	5/8	3/16 x 3/16 x 1	–	16	M5 x 5 x 22	18	5/8	16	14
KL2	0.750	3/16 x 3/16 x 1-1/4	0.832	20	M6 x 6 x 32	23	0.750	20	21

**Weight is approximate.*

k6 = existing values

KL Series with "A" Hollow Output

"F" Output Flange Housing

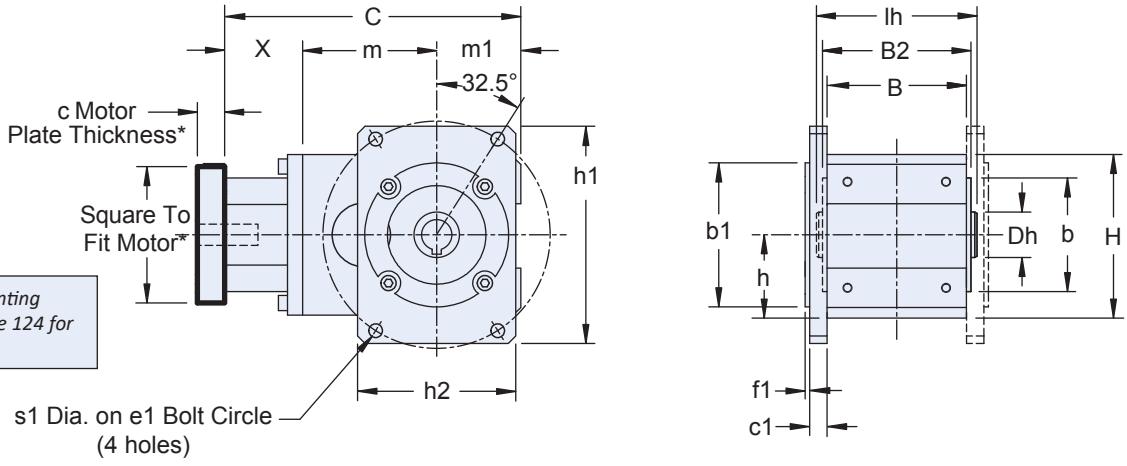

** See Motor Mounting Plate Option, page 124 for details.*

1. Removal Bolt – not supplied. See Installation instructions for details

2. Mounting Bolt – must be smaller than removal bolt

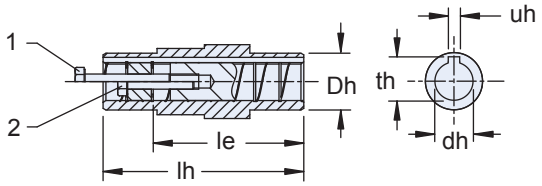

See hollow output installation instructions for further details

Table 1 **KL Series Unit Dimensions (mm) – "F" Round Flange Housing**

Unit	B	B2	b1	b	C	c1	Dh	e1	f1	H	h	h1	h2	le	lh	m	m1	s1	X
KL1	75	81	60_{j6}	60_{j6}	160	11.5	25	130	3	90	46	128.5	88.5	60.5	87	67.5	46	9	46.5
KL2	92	98	95_{j6}	75_{j6}	195	11.5	30	150	3	108	55	143.5	104.5	79.5	106	88.5	55	9	51.5

Table 2 **Standard "A" Hollow Bore**

	Bore - inches			Metric Bore - mm			Stainless Bore		Wt.*
Unit	dh_{G7}	uh	th	dh_{H7}	uh_{JS9}	th	Inches	mm	lbs.
KL1	0.625	0.188	0.713	16	5	18.3	0.625	16	14
KL2	0.750	0.188	0.832	20	6	22.8	0.750	20	21

**Weight is approximate.*

G7, H7, JS9 = actual values

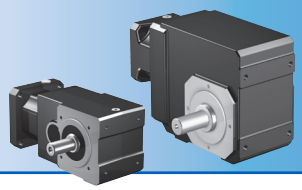

Dimensional Data

KL Series with "A" Hollow Output
"G" Pitch Circle Diameter (PCD) Tapped Holes

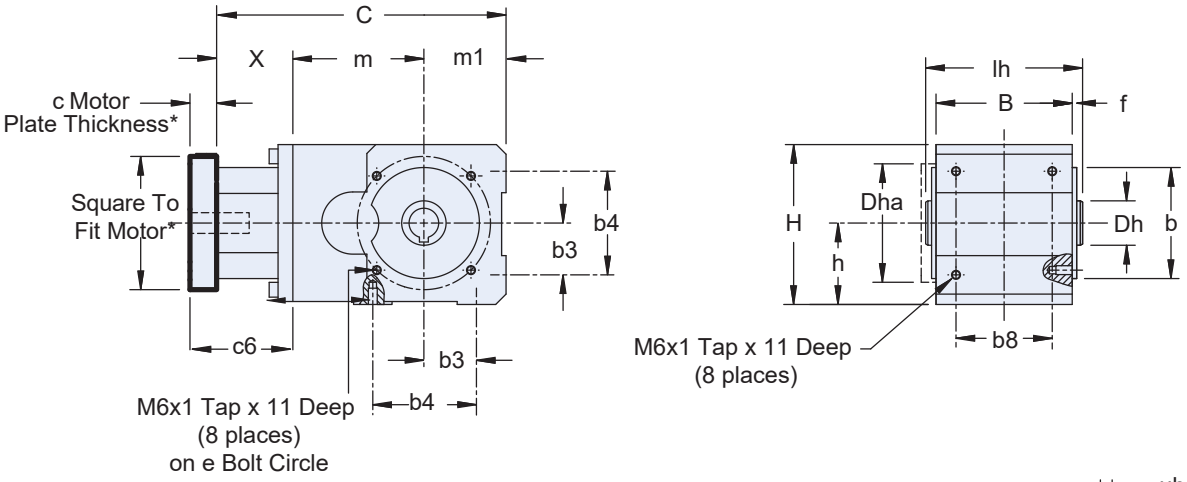

** See Motor Mounting Plate Option, page 124 for details.*

1. Removal Bolt – not supplied. See Installation instructions for details

2. Mounting Bolt – must be smaller than removal bolt

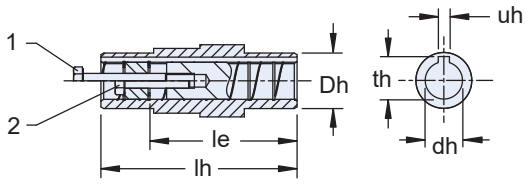

See hollow output installation instructions for further details

Table 1 KL Series Unit Dimensions (mm) – "G" Pitch Circle Diameter (PCD) Tapped Holes

Unit	B	b	b3	b4	b8	C	c6	Dh	Dha	e	f	H	h	le	lh	m	m1
KL1	75	60_{j6}	27.5	55	50	160	61.5	25	70	75	3	90	46	60.5	87	67.5	46
KL2	92	75_{j6}	35	70	65	195	69.5	30	80	90	3	108	55	79.5	106	88.5	55

Table 2 Standard "A" Hollow Bore

	Bore - inches			Metric Bore - mm			Stainless Bore		Wt.*
Unit	dh_{G7}	uh	th	dh_{H7}	uh_{JS9}	th	Inches	mm	lbs.
KL1	0.625	0.188	0.713	16	5	18.3	0.625	16	14
KL2	0.750	0.188	0.832	20	6	22.8	0.750	20	21

**Weight is approximate.* *G7, H7, JS9 = actual values*

"A" Hollow Bore Output "GD" Torque Arm Bracket KL2 Only

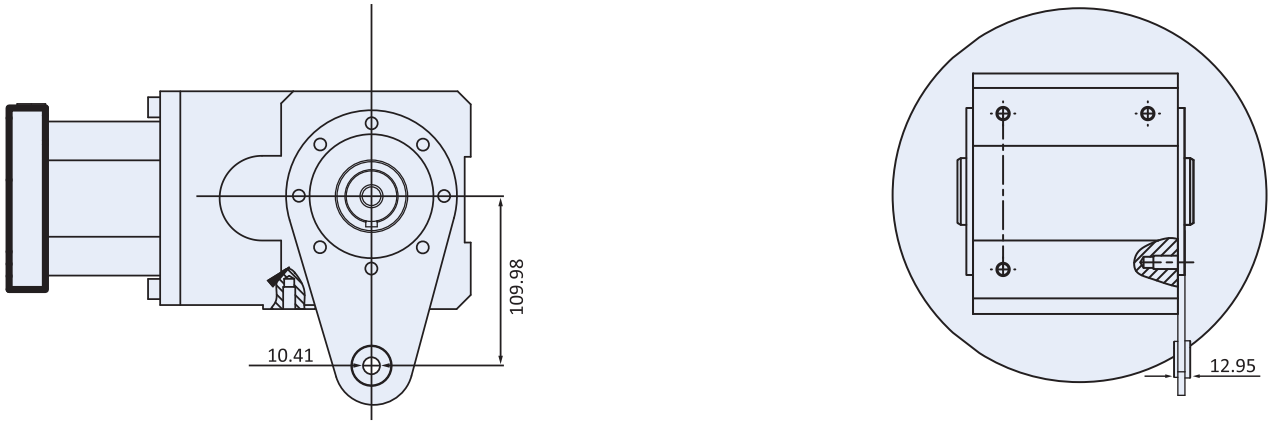

KL Series (KL202 only) with "W" Wobble Free Bushing Output

"G" Pitch Circle Diameter (PCD) Tapped Holes

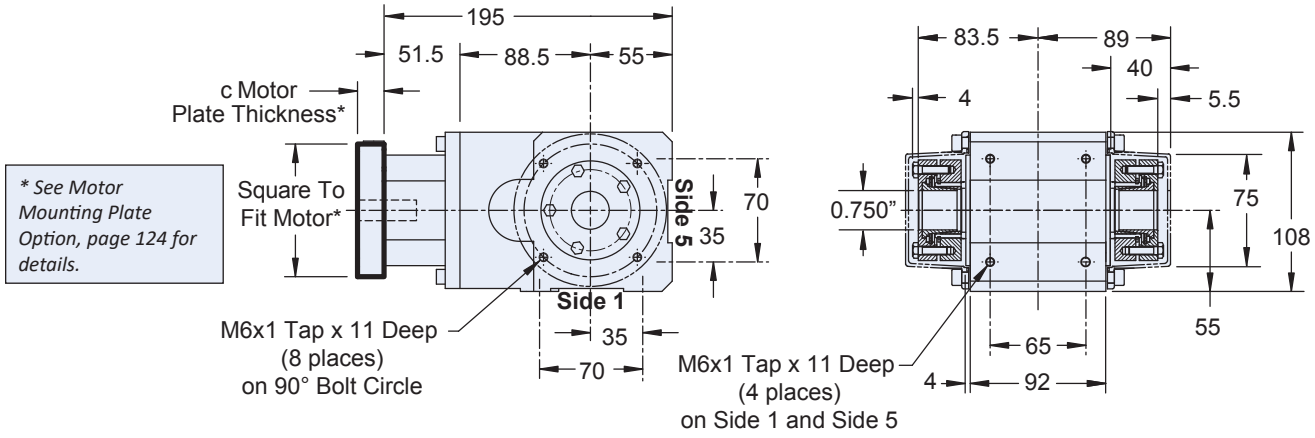

** See Motor Mounting Plate Option, page 124 for details.*

Important: *A 1/32" x 45° chamfer minimum is recommended for the shaft end. The bushing will accept a shaft with a tolerance of +0.000/-0.005 inches.*

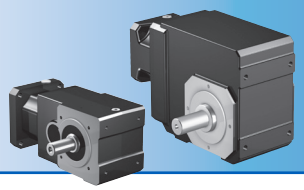

Dimensional Data

KL Series with "S" Shrink Ring Output
"G" Pitch Circle Diameter (PCD) Tapped Holes

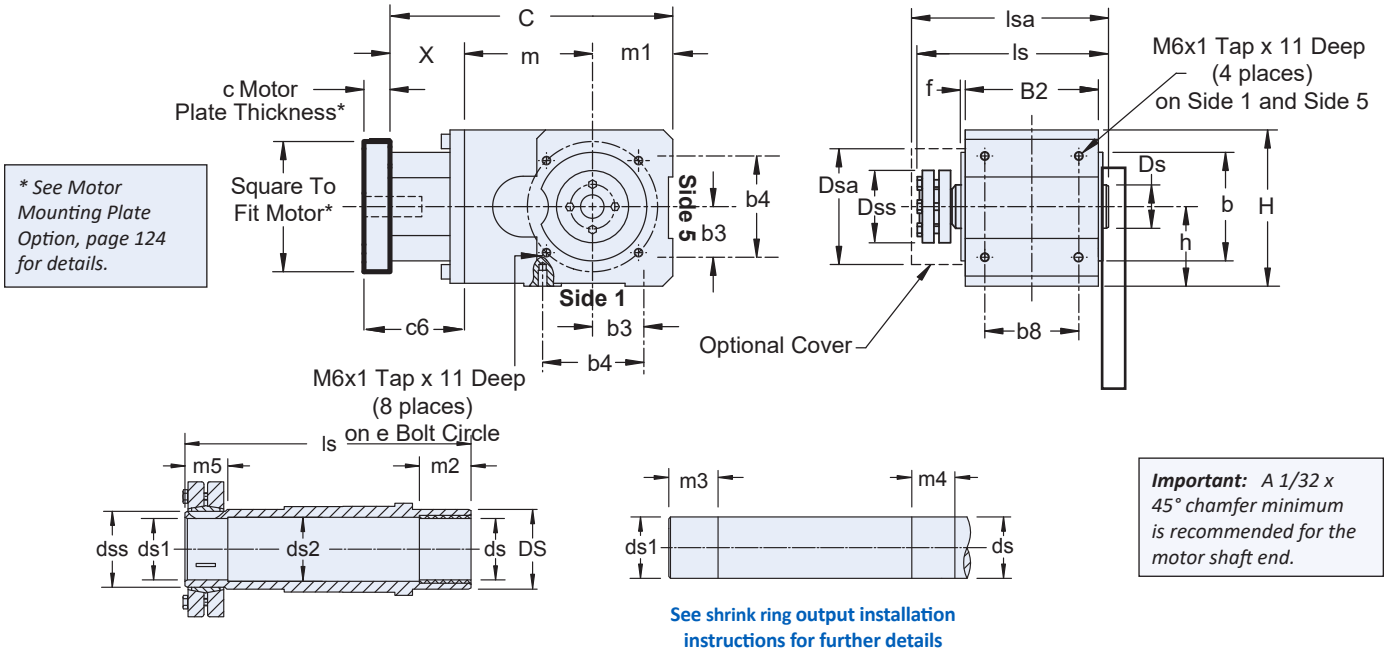

See shrink ring output installation instructions for further details

Table 1 KL Series Unit Dimensions (mm) – "S" Shrink Ring Output

Unit	B2	b	b3	b4	b8	C	c6	Dsa	Dss	e	f	H	h	lsa	m1	m
KL1	75	60_{j6}	27.5	55	50	160	46.5	64	46.2	75	3	90	46	114.5	46	67.5
KL2	92	75_{j6}	35	70	65	195	51.5	79	50.0	90	3	108	55	139	55	88.5

Table 2 Bore/Shaft Dimensions (mm)

Unit	DS	Ds	ds_{H7}	ds1 Bore	ds1 Shaft	ds2	dss	ls	m2	m3	m4	m5	Wt.* lbs.
KL1	46.2	25	16	16_{H7}	16_{h6}	17.5	20	109	17	22	28	23	14
KL2	50	30	20	20_{H7}	20_{h6}	21.5	24	131	22	27	31	26	21

**Weight is approximate*

h6 = existing value; H7 = actual values

"A" Hollow Bore Output "GD" Torque Arm Bracket KL2 Only

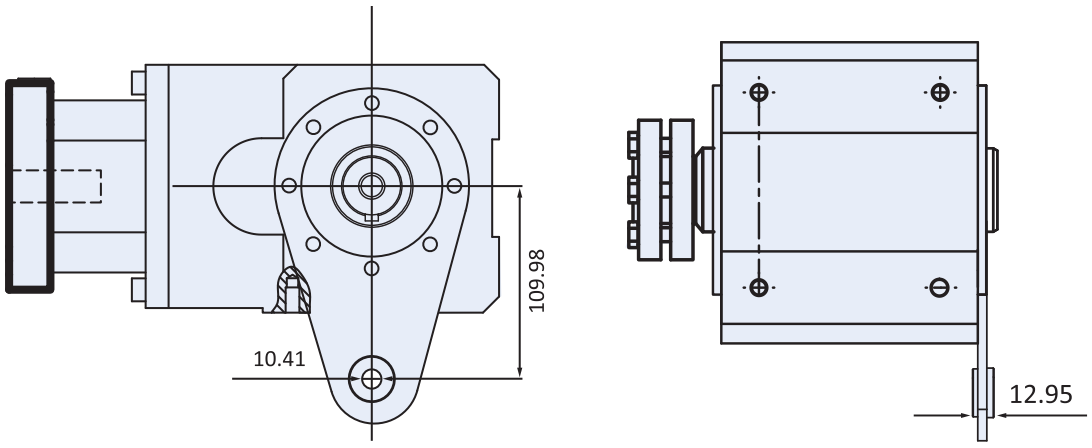

K Series with "V" Solid Shaft Output Option, "NG" Foot Mounting Housing & "G" Pitch Circle Diameter (PCD) Tapped Holes

K102VNG thru K403VNG

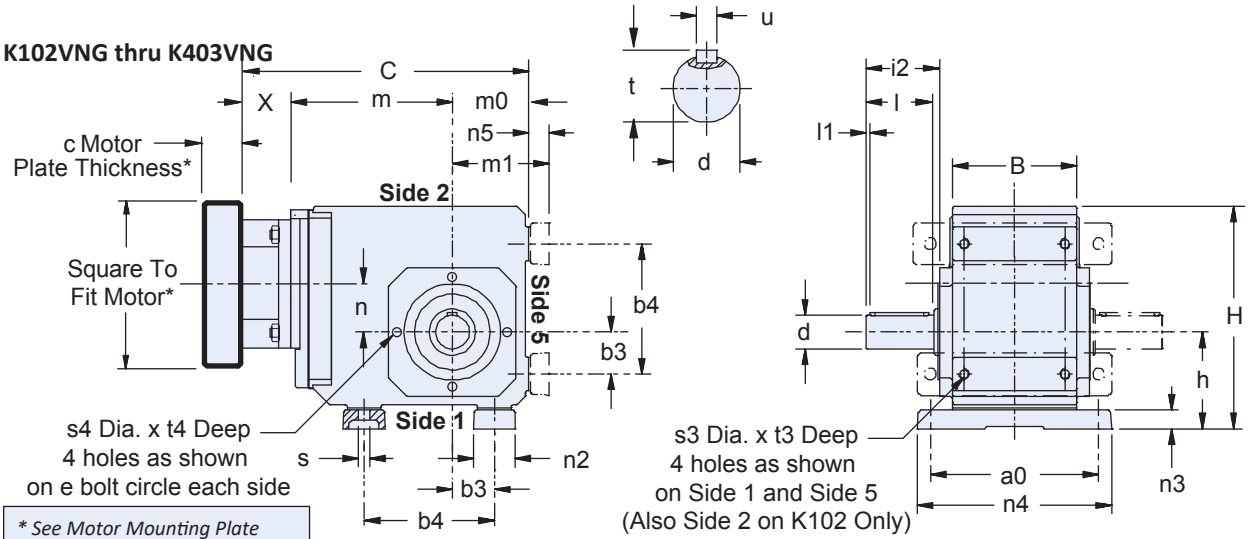

** See Motor Mounting Plate Option, page 124 for details.*

K513VNG thru K1014VNG

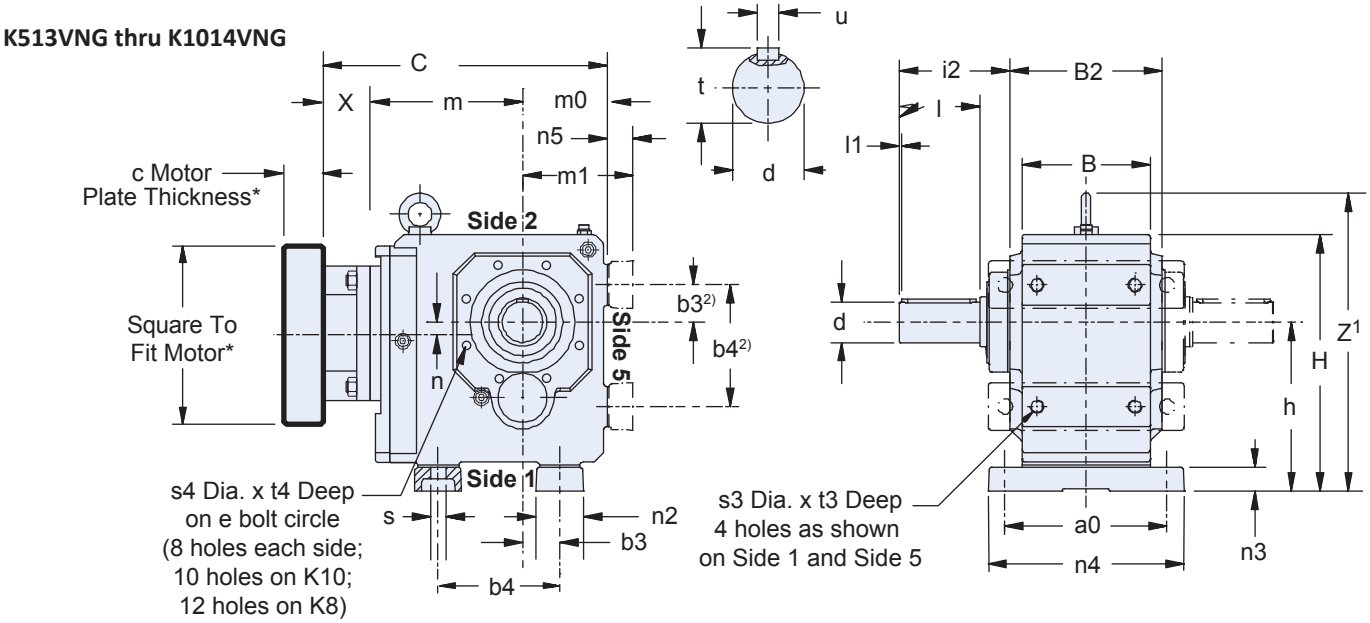

Size K10 Mounting Feet (Dimensions b3 and b4)

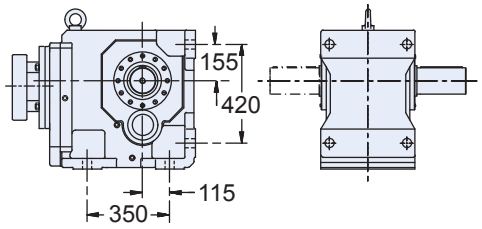

2) Mounting feet are integral on the K10 housing. Note that b3 = 155 and b4= 420 on Side 5 of the K10. Hole locations are as shown above.

Table 4 Motor Adapter Dimensions (mm)

Motor Adapter	Thickness[4] c Min.	Motor Shaft d2 Max.[3]	X	Wt. lbs.
ME10	21	19	40	5
ME20	24	32	50	8
ME30	25	38	60	15
ME40	33	48	88	28
ME50	43	60	81.5	42

3) If an adapter bushing is required it will be supplied as a component of the motor mounting plate.

4) Motor plate maximum thickness (c) will vary with motor shaft length but will not be less than shown.

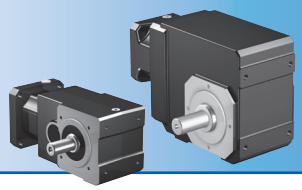

Dimensional Data

Table 1 K Series Unit Dimensions (mm) — "NG" Foot Mounting Housing

Unit	a0	B	B2	b3	b4	H	h	i2	l	l1	m0	m1	n2	n3	n4	n5	s	Z[1]
K1	115	90	—	30	90[1)]	175	75	62	50	4	60	75	32	13	140	15	9	—
K2	155	115	—	35	115	213	88	68	60	4	65	88	40	20	185	23	11	—
K3	170	130	—	40	130	236	98	69	60	4	75	98	45	20	200	23	11	—
K4	200	148	—	50	155	265	115	89.5	80	4	90	115	50	22	230	25	14	—
K5	200	160	185	40	140	290	190	129.5	100	4	100	130	60	27	240	30	18	342
K6	210	168	200	50	160	340	220	136	90	4	120	150	65	27	250	30	18.5	392
K7	241[2)]	190	226	55	180	380	250	164	120	4	125	163	70	35	290	38	23	441
K8	300	235	282	75	240	455	310	185	140	5	145	190	85	41	360	45	27	516
K9	360	285	330	95	280	545	365	220	170	8	180	230	95	46	430	50	31	615
K10	330	356	400	115[3)]	350[3)]	680	420	240	210	15	225	225	120	45	400	45	39	680

[1)] Mounting holes are also located on Side 1 of the K1 unit ONLY.
[2)] For a0 with mounting on side 1 only; a0 when mounting on optional side 5 is 241 mm.
[3)] Mounting feet are integral on the K10 housing as shown in drawing, facing page. Note b3 = 155 and b4 = 420 on **Side 5** *of the K10.*

Table 2 K Series Unit Dimensions (mm) – "G" Pitch Circle Diameter (PCD) Tapped Holes

Unit	e	s3	s4	t3	t4
K1	90	M8x1.25	M8x1.25	13	13
K2	100	M10x1.5	M8x1.25	16	16
K3	115	M10x1.5	M8x1.25	16	16
K4	130	M12x1.75	M10x1.5	19	19
K5	130	M16x2	M10x1.5	26	26
K6	165	M16x2	M10x1.5	26	26
K7	185	M20x2.5	M12x1.75	31	31
K8	215	M24x3	M12x1.75	38	38
K9	265	M30x3.5	M16x2	48	48
K10	300	39 [1)]	10-M20	45	33

[1)] s3 on K10 are thru holes, not tapped.

Table 3 K Series Unit Dimensions (mm) — "V" Solid Shaft Output

Shaft outputs in stainless or carbon steel. See page 125 for available shaft output options.

	Inches			Metric (mm)			Stainless	
Unit	d_{h6}*	t	u – Key	d*	t	u – Key	Inches	mm
K1	1.000	1.11	1/4 x 1/4 x 1-9/16	25_{k6}	28	M8×7×40	1.000	25
K2	1.250	1.36	1/4 x 1/4 x 1-15/16	30_{k6}	33	M8×7×50	1.250	30
K3	1.250	1.36	1/4 x 1/4 x 1-15/16	30_{k6}	33	M8×7×50	1.250	40
K4	1.375	1.51	5/16 x 5/16 x 2-5/16	40_{k6}	43	M12×8×70	1.375	–
K5	1.750	1.92	3/8 x 3/8 x 3-5/32	45_{k6}	48.5	M14×9×80	1.750	45
K6	1.750	1.92	3/8 x 3/8 x 3-5/32	50_{k6}	53.5	M14×9×90	1.750	–
K7	2.375	2.65	5/8 x 5/8 x 3-15/16	60_{k6}	64	M18×11×110	2.375	–
K8	2.875	3.21	3/4 x 3/4 x 4-5/16	70_{m6}	74.5	M20×12×125	2.875	70
K9	3.625	4.01	7/8 x 7/8 x 5-1/2	90_{m6}	95	M25×14×140	–	90
K10	4.375	4.82	1 x 1 x 7-1/8	110_{m6}	116	M28×16×180	–	–

**h6, k6, m6 = existing value*

Table 5 K Series Unit Dimensions (mm)

	ME10			ME20			ME30			ME40			ME50			Wt.
Unit	C	m	n	C	m	n	C	m	n	C	m	n	C	m	n	lbs.
K102	224	124	36	238	128	36	—	—	—	—	—	—	—	—	—	31
K202	248	143	46	262	147	46	274	149	46	—	—	—	—	—	—	40
K203	285	180	46	—	—	—	—	—	—	—	—	—	—	—	—	53
K302	278	163	52.5	292	167	52.5	304	169	52.5	—	—	—	—	—	—	67
K303	315	200	52.5	335	210	16	—	—	—	—	—	—	—	—	—	73
K402	—	—	—	327	187	60	339	189	60	370	192	60	—	—	—	93
K403	350	220	60	370	230	23	—	—	—	—	—	—	—	—	—	100
K513	—	—	—	322	172	15	334	174	15	365	177	15	—	—	—	106
K514	—	—	—	365	215	15	—	—	—	—	—	—	—	—	—	109
K613	—	—	—	361	191	18	373	193	18	404	196	18	411.5	210	18	170
K614	—	—	—	404	234	18	—	—	—	—	—	—	—	—	—	177
K713	—	—	—	—	—	—	406	221	20	437	224	20	443.5	237	20	221
K714	—	—	—	438	263	20	468	283	20	—	—	—	—	—	—	234
K813	—	—	—	—	—	—	452	247	24	482	249	24	488.5	262	24	309
K814	—	—	—	—	—	—	513	308	24	553	320	5	—	—	—	331
K913	—	—	—	—	—	—	—	—	—	562	294	25	568.5	307	25	508
K914	—	—	—	—	—	—	593	353	25	633	365	25	—	—	—	530
K1013	—	—	—	—	—	—	—	—	—	—	—	—	698.5	392	28	1055
K1014	—	—	—	—	—	—	—	—	—	763	450	28	781.5	475	28	1079

For approximate weight, add adapter weight from Table 3 and unit weight from Table 4.

K Series with "V" Solid Shaft Output

"F" Round Flange Housing

Other flange sizes available: for details see "Optional "F" Round Flange Housing Options for K Series" on page 163 .

K102VF thru K403VF

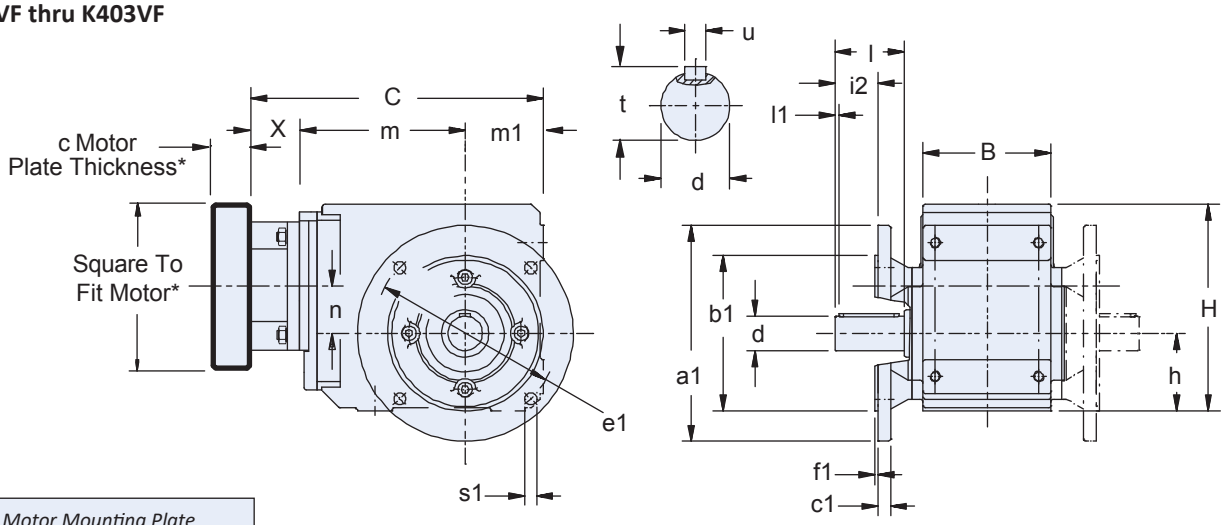

** See Motor Mounting Plate Option, page 124 for details.*

K513VF thru K1014VF

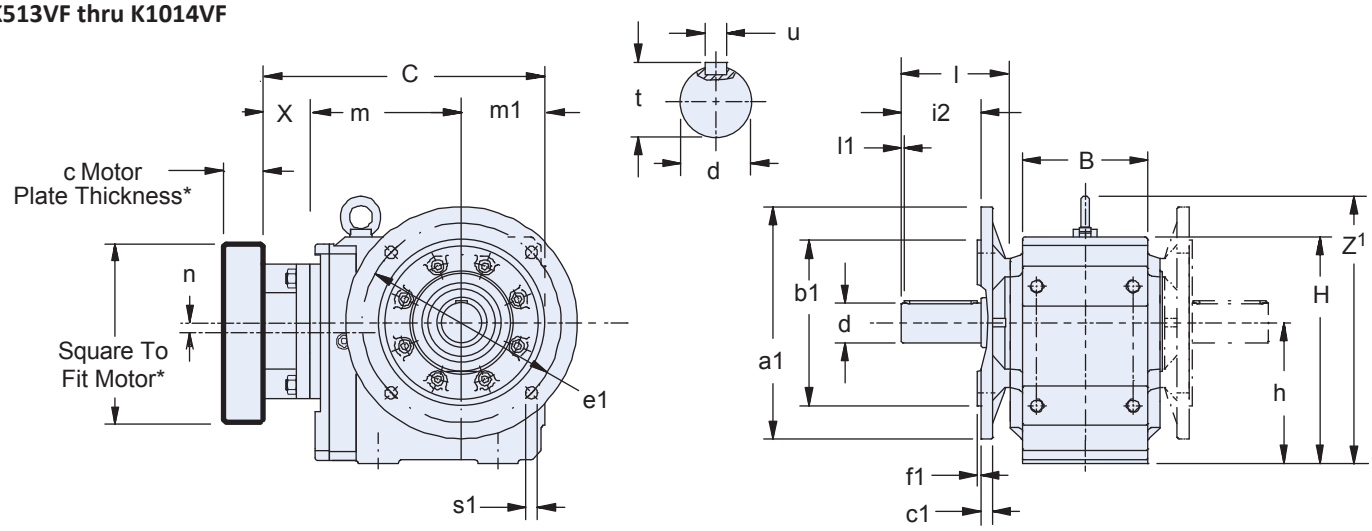

Size K9 and K10 Flange

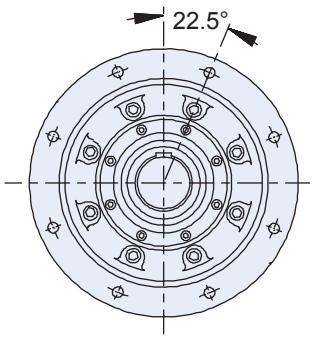

K913 thru K1014 has 8 mounting holes in the output flange located as shown.

Table 3 Motor Adapter Dimensions (mm)

Motor Adapter	Thickness[2] c Min.	Motor Shaft d2 Max.[1]	X	Wt. lbs.
ME10	21	19	40	5
ME20	24	32	50	8
ME30	25	38	60	15
ME40	33	48	88	28
ME50	43	60	81.5	42

1) If an adapter bushing is required it will be supplied as a component of the motor mounting plate.

2) Motor plate maximum thickness (c) will vary with motor shaft length but will not be less than shown.

Dimensional Data

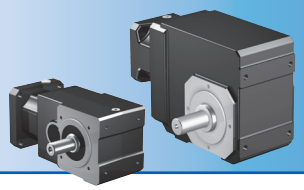

Table 1 K Series Unit Dimensions (mm) – "F" Round Flange Housing

Unit	a1	B	b1	c1	e1	f1	H	h	i2	l	l1	m1	s1	Z[1]
K1	160	90	110_{j6}	10	130	3.5	160	60	30.0	50	4	60	9	—
K2	200	115	130_{j6}	12	165	3.5	190	65	36.0	60	4	65	11	—
K3	200	130	130_{j6}	14	165	3.5	213	75	31.0	60	4	75	11	—
K4	250	148	180_{j6}	15	215	4	240	90	49.5	80	4	90	14	—
K5	250	160	180_{j6}	15	215	4	260	160	89.9	90	4	100	14	312
K6	300	168	230_{j6}	17	265	4	310	190	100.0	100	4	120	14	362
K7	350	190	250_{h6}	18	300	5	342	212	119.9	120	4	125	18	403
K8	400	235	300_{h6}	20	350	5	410	265	140.0	140	5	145	18	471
K9	450	285	350_{h6}	23	400	5	495	315	169.9	170	8	180	18	565
K10	550	356	450_{h6}	25	500	5	591	375	210.0	210	15	225	18	680

Table 2 K Series Unit Dimensions (mm) — "V" Solid Shaft Output

Shaft outputs in stainless or carbon steel. See page 125 for available shaft output options.

	Inches			Metric (mm)			Stainless	
Unit	d_{h6}*	t	u – Key	d*	t	u – Key	Inches	mm
K1	1.000	1.11	1/4 x 1/4 x 1-9/16	25_{k6}	28	M8×7×40	1.000	25
K2	1.250	1.36	1/4 x 1/4 x 1-15/16	30_{k6}	33	M8×7×50	1.250	30
K3	1.250	1.36	1/4 x 1/4 x 1-15/16	30_{k6}	33	M8×7×50	1.250	40
K4	1.375	1.51	5/16 x 5/16 x 2-5/16	40_{k6}	43	M12×8×70	1.375	–
K5	1.750	1.92	3/8 x 3/8 x 3-5/32	45_{k6}	48.5	M14×9×80	1.750	45
K6	1.750	1.92	3/8 x 3/8 x 3-5/32	50_{k6}	53.5	M14×9×90	1.750	–
K7	2.375	2.65	5/8 x 5/8 x 3-15/16	60_{k6}	64	M18×11×110	2.375	–
K8	2.875	3.21	3/4 x 3/4 x 4-5/16	70_{m6}	74.5	M20×12×125	2.875	70
K9	3.625	4.01	7/8 x 7/8 x 5-1/2	90_{m6}	95	M25×14×140	–	90
K10	4.375	4.82	1 x 1 x 7-1/8	110_{m6}	116	M28×16×180	–	–

**h6, j6, k6, m6 = existing value*

Table 4 K Series Unit Dimensions (mm)

	ME10			ME20			ME30			ME40			ME50			Wt.
Unit	C	m	n	C	m	n	C	m	n	C	m	n	C	m	n	lbs.
K102	224	124	36	238	128	36	—	—	—	—	—	—	—	—	—	31
K202	248	143	46	262	147	46	274	149	46	—	—	—	—	—	—	40
K203	285	180	46	—	—	—	—	—	—	—	—	—	—	—	—	53
K302	278	163	52.5	292	167	52.5	304	169	52.5	—	—	—	—	—	—	67
K303	315	200	52.5	335	210	16	—	—	—	—	—	—	—	—	—	73
K402	—	—	—	327	187	60	339	189	60	370	192	60	—	—	—	93
K403	350	220	60	370	230	23	—	—	—	—	—	—	—	—	—	100
K513	—	—	—	322	172	15	334	174	15	365	177	15	—	—	—	106
K514	—	—	—	365	215	15	—	—	—	—	—	—	—	—	—	109
K613	—	—	—	361	191	18	373	193	18	404	196	18	411.5	210	18	170
K614	—	—	—	404	234	18	—	—	—	—	—	—	—	—	—	177
K713	—	—	—	—	—	—	406	221	20	437	224	20	443.5	237	20	221
K714	—	—	—	438	263	20	468	283	20	—	—	—	—	—	—	234
K813	—	—	—	—	—	—	452	247	24	482	249	24	488.5	262	24	309
K814	—	—	—	—	—	—	513	308	24	553	320	5	—	—	—	331
K913	—	—	—	—	—	—	—	—	—	562	294	25	568.5	307	25	508
K914	—	—	—	—	—	—	593	353	25	633	365	25	—	—	—	530
K1013	—	—	—	—	—	—	—	—	—	—	—	—	698.5	392	28	1055
K1014	—	—	—	—	—	—	—	—	—	763	450	28	781.5	475	28	1079

For approximate weight, add adapter weight from Table 3 and unit weight from Table 4.

K Series with "A" Hollow Output

"F" Round Flange Housing

Other flange sizes available: for details see "Optional "F" Round Flange Housing Options for K Series" on page 163.

K102AF thru K403AF

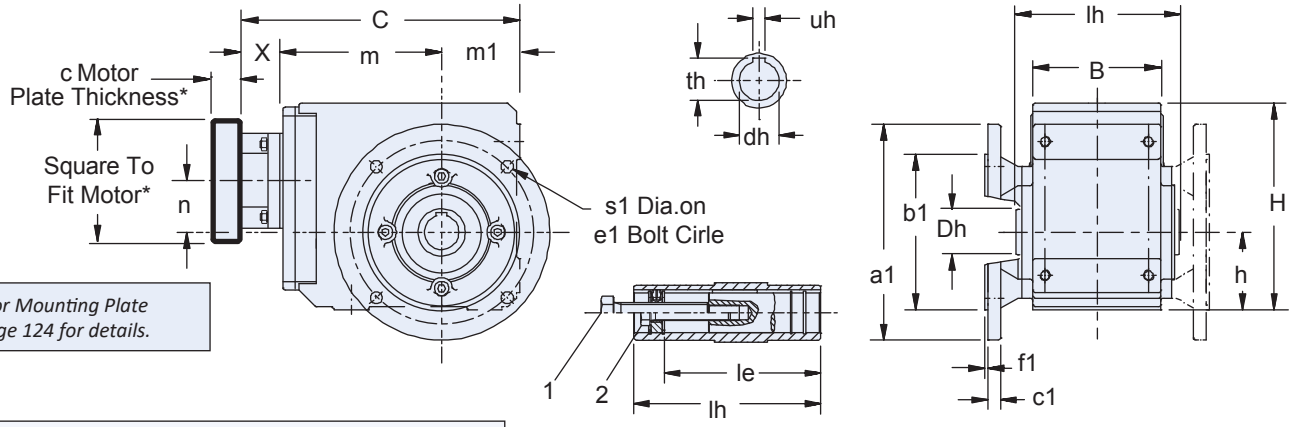

** See Motor Mounting Plate Option, page 124 for details.*

1. Removal Bolt: not supplied. See Installation Guide for details.
2. Mounting Bolt: must be smaller than removal bolt.

See hollow output installation instructions for further details

K513AF thru K1014AF

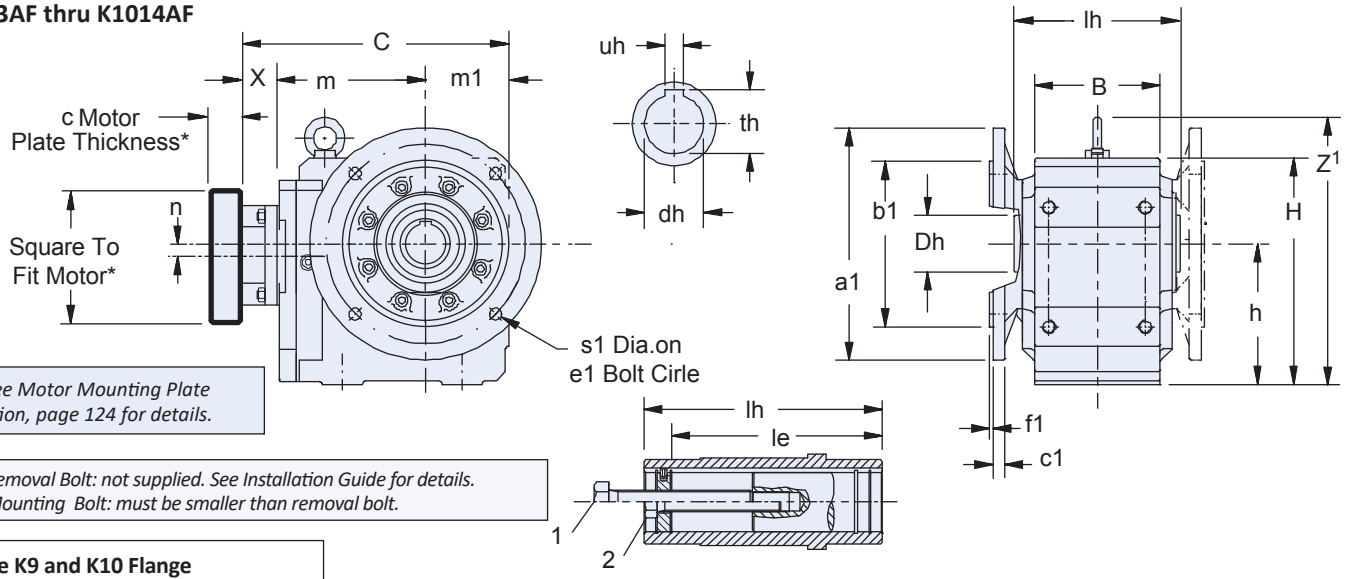

** See Motor Mounting Plate Option, page 124 for details.*

1. Removal Bolt: not supplied. See Installation Guide for details.
2. Mounting Bolt: must be smaller than removal bolt.

See hollow output installation instructions for further details

Size K9 and K10 Flange

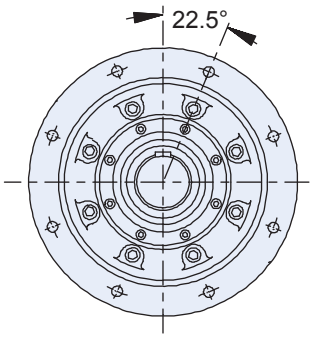

K913 thru K1014 has 8 mounting holes in the output flange located as shown.

Table 3 Motor Adapter Dimensions (mm)

Motor Adapter	Thickness [2] c Min.	Motor Shaft d2 Max. [1]	X	Wt. lbs.
ME10	21	19	40	5
ME20	24	32	50	8
ME30	25	38	60	15
ME40	33	48	88	28
ME50	43	60	81.5	42

1) If an adapter bushing is required it will be supplied as a component of the motor mounting plate.

2) Motor plate maximum thickness (c) will vary with motor shaft length but will not be less than shown.

Dimensional Data

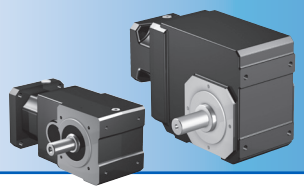

Table 1 K Series Unit Dimensions (mm) – "F" Round Flange Housing

Unit	a1	B	b1*	c1	Dh	e1	f1	H	h	le	lh	m1	s1	Z_1
K1	160	90	110_{j6}	10	40	130	3.5	160	60	98	120	60	9	—
K2	200	115	130_{j6}	12	45	165	3.5	190	65	121.5	148	65	11	—
K3	200	130	130_{j6}	14	50	165	3.5	213	75	125	160	75	11	—
K4	250	148	180_{j6}	15	55	215	4	240	90	157	188	90	14	—
K5	250	160	180_{j6}	15	65	215	4	260	160	164	200	100	14	312
K6	300	168	230_{j6}	17	70	265	4	310	190	179	215	120	14	362
K7	350	190	250_{h6}	18	85	300	5	342	212	214	242	125	18	403
K8	400	235	300_{h6}	20	100	350	5	410	265	263	300	145	18	471
K9	450	285	350_{h6}	23	120	400	5	495	315	302	350	180	18	565
K10	550	356	450_{h6}	25	130	500	5	591	375	361	410	225	18	680

Table 2 K Series Unit Dimensions (mm) — "A" Hollow Bore Output

Dimensions in **BOLD BLUE** (standard). Contact STOBER for delivery on other sizes listed.

	Carbon Steel						Stainless	
	Inches			Metric (mm)				
Unit	dh_{G7}*	th	uh	dh_{H7}*	th	uh_{JS9}*	Inches	mm
K1	**1.000**	1.11	0.250	25	28.3	8	**1.000**	25
K2	**1.1875**	1.31	0.250	30	33.3	8	1.125, 1.1875, **1.250**	30
K3	**1.375**	1.52	0.312	35	38.3	10	1.25, **1.375**	35
K4	**1.500**	1.67	0.375	40	43.3	12	1.375, **1.500**	**40**
K5	**2.000**	2.13	0.500	50	53.8	14	1.4375, 1.9375, **2.000**	**40**, **50**
K6	**2.000**	2.23	0.500	50	53.8	14	1.4375, 1.9375, **2.000**, 2.1875	40, 50, 60
K7	**2.375**	2.66	0.625	60	64.4	18	1.9375, 2.00, 2.1875, 2.375	**60**
K8	**2.750**	3.03	0.625	70	74.9	20	2.1875, 2.375, 2.5, 2.6875, 2.750	60, **70**
K9	**3.250**	3.59	0.750	90	95.4	25	2.6875, **2.9375**, **3.000**, 3.25, **3.4375**	90
K10	**4.000**	4.25	1.000	100	108	28	3.4375, 4.00	–

** h6, j6 = existing values; G7, H7, JS9 = actual values*

Table 4 K Series Unit Dimensions (mm)

	ME10			ME20			ME30			ME40			ME50			Wt.
Unit	C	m	n	C	m	n	C	m	n	C	m	n	C	m	n	lbs.
K102	224	124	36	238	128	36	—	—	—	—	—	—	—	—	—	31
K202	248	143	46	262	147	46	274	149	46	—	—	—	—	—	—	40
K203	285	180	46	—	—	—	—	—	—	—	—	—	—	—	—	53
K302	278	163	52.5	292	167	52.5	304	169	52.5	—	—	—	—	—	—	67
K303	315	200	52.5	335	210	16	—	—	—	—	—	—	—	—	—	73
K402	—	—	—	327	187	60	339	189	60	370	192	60	—	—	—	93
K403	350	220	60	370	230	23	—	—	—	—	—	—	—	—	—	100
K513	—	—	—	322	172	15	334	174	15	365	177	15	—	—	—	106
K514	—	—	—	365	215	15	—	—	—	—	—	—	—	—	—	109
K613	—	—	—	361	191	18	373	193	18	404	196	18	411.5	210	18	170
K614	—	—	—	404	234	18	—	—	—	—	—	—	—	—	—	177
K713	—	—	—	—	—	—	406	221	20	437	224	20	443.5	237	20	221
K714	—	—	—	438	263	20	468	283	20	—	—	—	—	—	—	234
K813	—	—	—	—	—	—	452	247	24	482	249	24	488.5	262	24	309
K814	—	—	—	—	—	—	513	308	24	553	320	5	—	—	—	331
K913	—	—	—	—	—	—	—	—	—	562	294	25	568.5	307	25	508
K914	—	—	—	—	—	—	593	353	25	633	365	25	—	—	—	530
K1013	—	—	—	—	—	—	—	—	—	—	—	—	698.5	392	28	1055
K1014	—	—	—	—	—	—	—	—	—	763	450	28	781.5	475	28	1079

For approximate weight, add adapter weight from Table 3 and unit weight from Table 4.

K Series with "A" Hollow Output

"G" Pitch Circle Diameter (PCD) Tapped Holes

K102AG thru K403AG

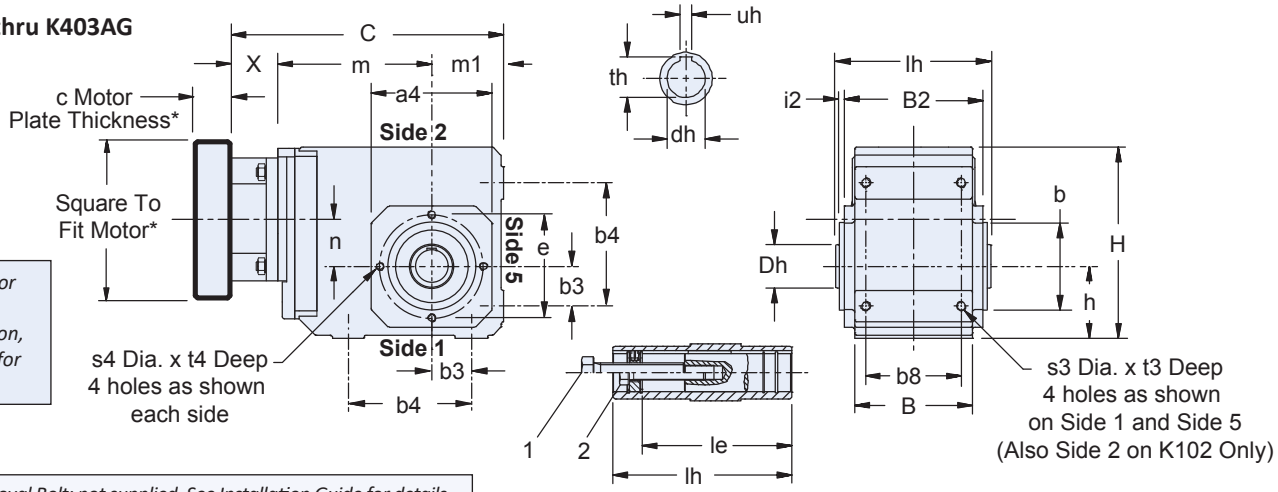

** See Motor Mounting Plate Option, page 124 for details.*

1. Removal Bolt: not supplied. See Installation Guide for details.
2. Mounting Bolt: must be smaller than removal bolt.

See hollow output installation instructions for further details

K513AG thru K1014AG

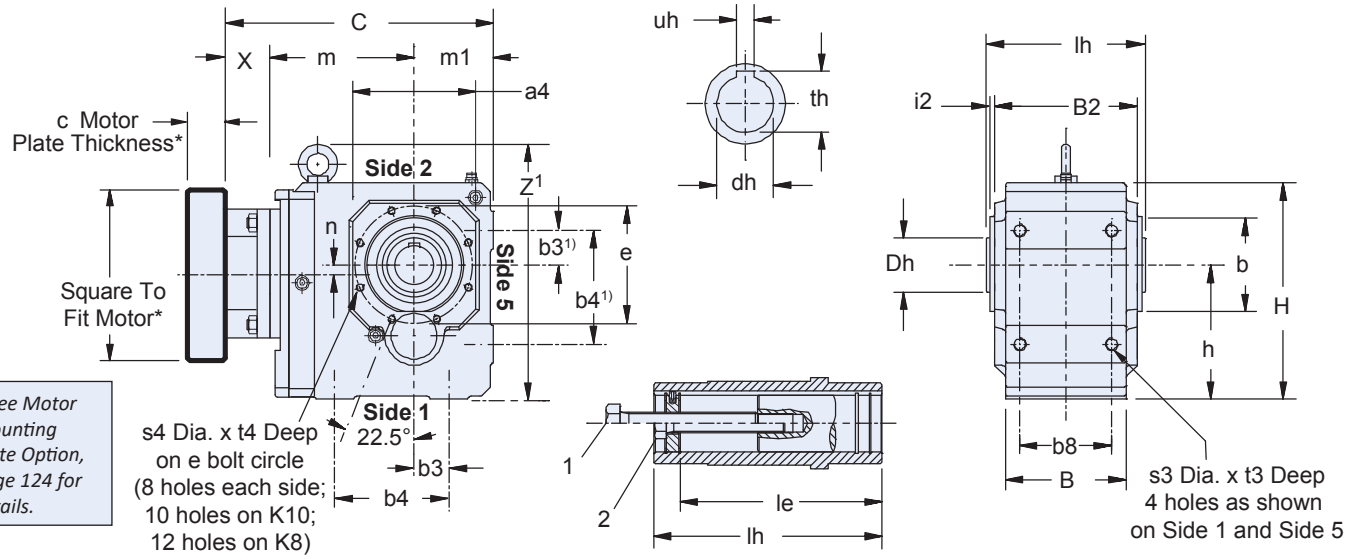

** See Motor Mounting Plate Option, page 124 for details.*

1. Removal Bolt: not supplied. See Installation Guide for details.
2. Mounting Bolt: must be smaller than removal bolt.

See hollow output installation instructions for further details

Size K10 Mounting Feet (Dimensions b3 and b4)

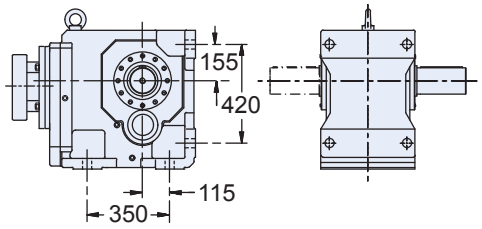

1) Mounting feet are integral on the K10 housing. Note that b3 = 155 and b4 = 420 on Side 5 of the K10. Hole locations are as shown above.

Table 3 Motor Adapter Dimensions (mm)

Motor Adapter	Thickness [3] c Min.	Motor Shaft d2 Max. [2]	X	Wt. lbs.
ME10	21	19	40	5
ME20	24	32	50	8
ME30	25	38	60	15
ME40	33	48	88	28
ME50	43	60	81.5	42

[2] If an adapter bushing is required it will be supplied as a component of the motor mounting plate.

[3] Motor plate maximum thickness (c) will vary with motor shaft length but will not be less than shown.

Dimensional Data

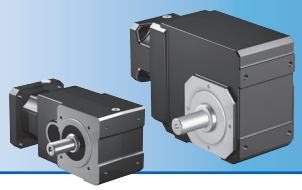

Table 1 K Series Unit Dimensions (mm) – "G" Pitch Circle Diameter (PCD) Tapped Holes

Unit	a4	B	B2	b*	b3	b4	b8	Dh	e	H	h	i2	le	lh	m1	s3	s4	t3	t4	Z[1]
K1	105	90	106	75_{j6}	30	90	70	40	90	160	60	3	98	120	60	M8x1.25	M8x1.25	13	13	–
K2	116	115	134	82_{j6}	35	115	90	45	100	190	65	3	121.5	148	65	M10x1.5	M8x1.25	16	16	–
K3	132	130	146	95_{j6}	40	130	105	50	115	213	75	3	125	160	75	M10x1.5	M8x1.25	16	16	–
K4	152	148	173	110_{j6}	50	155	120	55	130	240	90	3.5	157	188	90	M12x1.75	M10x1.5	19	19	–
K5	145	160	185	110_{j6}	40	140	125	65	130	260	160	3.5	164	200	100	M16x2	M10x1.5	26	26	312
K6	180	168	200	140_{j6}	50	160	130	70	165	310	190	3.5	179	215	120	M16x2	M10x1.5	26	26	362
K7	195	190	226	155_{j6}	55	180	145	85	185	342	212	3.5	214	242	125	M20x2.5	M12x1.75	33	31	403
K8	226	235	282	185_{j6}	75	240	185	100	215	410	265	4	263	300	145	M24x3	M12x1.75	38	38	471
K9	280	285	330	230_{j6}	95	280	225	120	265	495	315	5	302	350	180	M30x3.5	M16x2	48	48	565
K10	340	356	400	250_{h6}	115 [1]	350 [1]	330	130	300	591	375	5	361	410	225	39 [2]	10-M20	45	33	680

[1] *Mounting feet are integral on the K10 housing as shown in drawing, facing page. Note b3 = 155 and b4 = 420 on* **Side 5** *of the K10.*
[2] *s3 on K10 are thru holes, not tapped.*

Table 2 K Series Unit Dimensions (mm) — "A" Hollow Bore Output

Dimensions in **BOLD BLUE** (standard). Contact STOBER for delivery on other sizes listed.

	Carbon Steel						Stainless	
	Inches			Metric (mm)				
Unit	dh_{G7}*	th	uh	dh_{H7}*	th	uh_{JS9}*	Inches	mm
K1	**1.000**	1.11	0.250	25	28.3	8	**1.000**	25
K2	**1.1875**	1.31	0.250	30	33.3	8	1.125, 1.1875, **1.250**	30
K3	**1.375**	1.52	0.312	35	38.3	10	1.25, **1.375**	35
K4	**1.500**	1.67	0.375	40	43.3	12	1.375, **1.500**	**40**
K5	**2.000**	2.13	0.500	50	53.8	14	1.4375, 1.9375, **2.000**	**40**, **50**
K6	**2.000**	2.23	0.500	50	53.8	14	1.4375, 1.9375, **2.000**, 2.1875	40, 50, 60
K7	**2.375**	2.66	0.625	60	64.4	18	1.9375, 2.00, 2.1875, 2.375	**60**
K8	**2.750**	3.03	0.625	70	74.9	20	2.1875, 2.375, 2.5, 2.6875, 2.750	60, **70**
K9	**3.250**	3.59	0.750	90	95.4	25	2.6875, **2.9375**, **3.000**, 3.25, **3.4375**	90
K10	**4.000**	4.25	1.000	100	108	28	3.4375, 4.00	–

** h6, j6 = existing values; G7, H7, JS9 = actual values*

Table 4 K Series Unit Dimensions (mm)

	ME10			ME20			ME30			ME40			ME50			Wt.
Unit	n	C	m	n	C	m	n	C	m	n	C	m	n	C	m	lbs.
K102	36	224	124	36	238	128	—	—	—	—	—	—	—	—	—	31
K202	46	248	143	46	262	147	46	274	149	—	—	—	—	—	—	40
K203	46	285	180	—	—	—	—	—	—	—	—	—	—	—	—	53
K302	52.5	278	163	52.5	292	167	52.5	304	169	—	—	—	—	—	—	67
K303	52.5	315	200	16	335	210	—	—	—	—	—	—	—	—	—	73
K402	—	—	—	60	327	187	60	339	189	60	370	192	—	—	—	93
K403	60	350	220	23	370	230	—	—	—	—	—	—	—	—	—	100
K513	—	—	—	15	322	172	15	334	174	15	365	177	—	—	—	106
K514	—	—	—	15	365	215	—	—	—	—	—	—	—	—	—	109
K613	—	—	—	18	361	191	18	373	193	18	404	196	18	411.5	210	170
K614	—	—	—	18	404	234	—	—	—	—	—	—	—	—	—	177
K713	—	—	—	—	—	—	20	406	221	20	437	224	20	443.5	237	221
K714	—	—	—	20	438	263	20	468	283	—	—	—	—	—	—	234
K813	—	—	—	—	—	—	24	452	247	24	482	249	24	488.5	262	309
K814	—	—	—	—	—	—	24	513	308	5	553	320	—	—	—	331
K913	—	—	—	—	—	—	—	—	—	25	562	294	25	568.5	307	508
K914	—	—	—	—	—	—	25	593	353	25	633	365	—	—	—	530
K1013	—	—	—	—	—	—	—	—	—	—	—	—	28	698.5	392	1055
K1014	—	—	—	—	—	—	—	—	—	28	763	450	28	781.5	475	1079

For approximate weight, add adapter weight from Table 3 and unit weight from Table 4.

K Series with SINGLE "W" Wobble Free Bushing Output

"G" Pitch Circle Diameter (PCD) Tapped Holes

K102WG thru K403WG

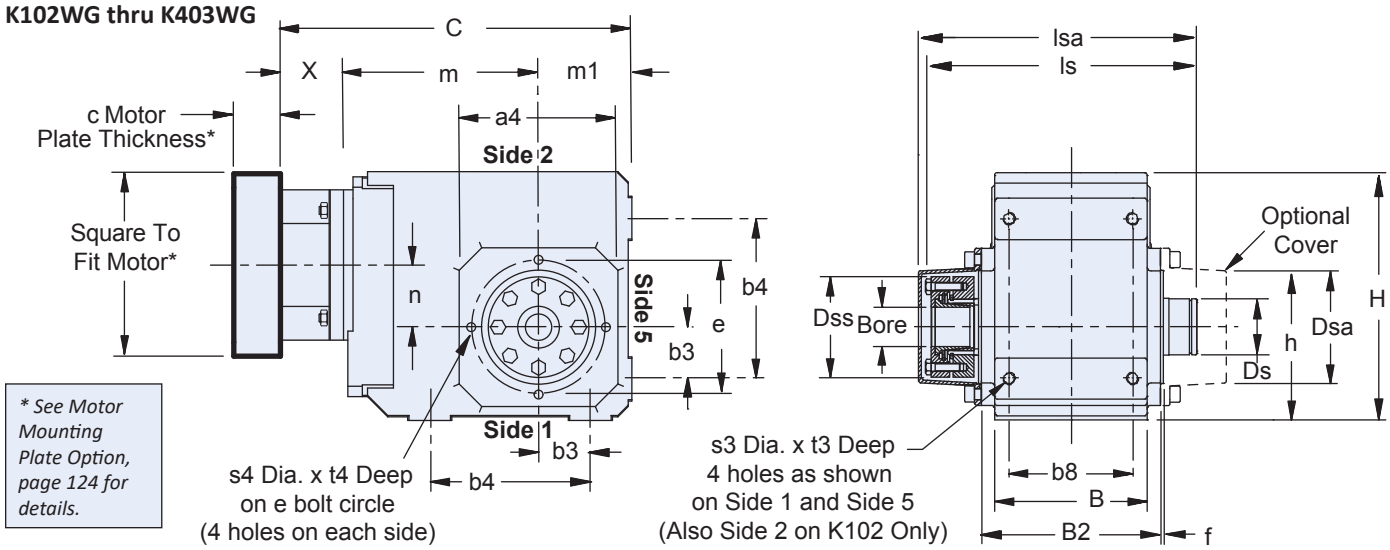

** See Motor Mounting Plate Option, page 124 for details.*

Important: A **1/32"** x 45° chamfer minimum is recommended for the shaft end. The bushing will accept a shaft with a tolerance of +0.000/-0.005 inches.

K513WG thru K814WG

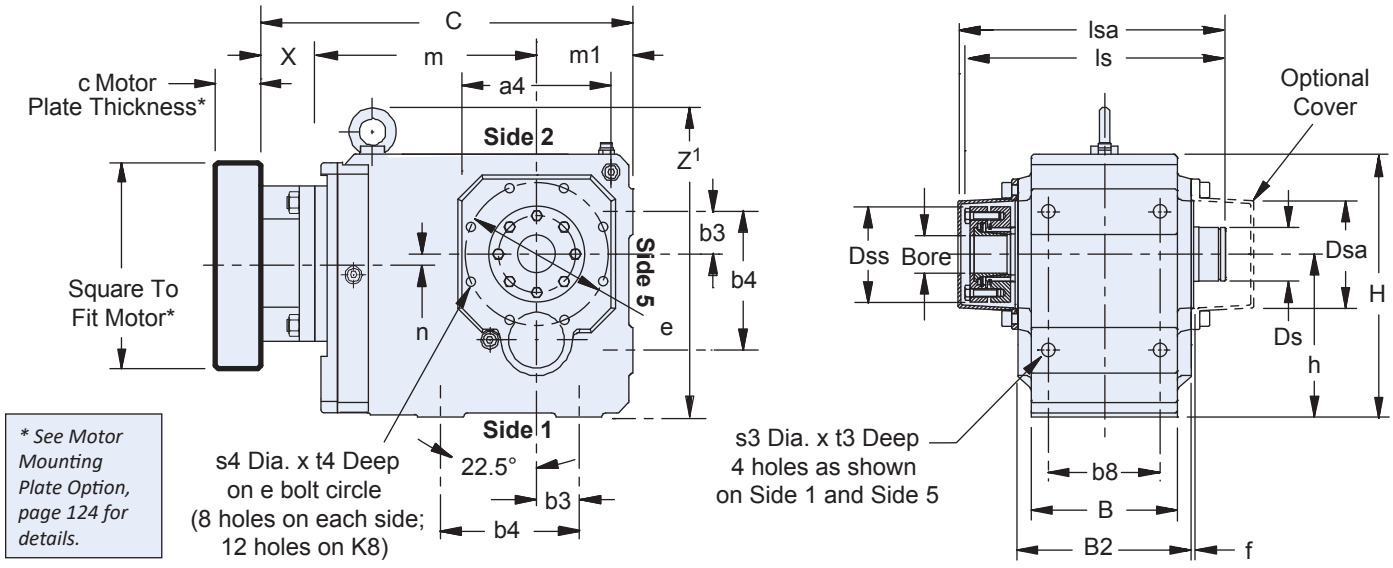

** See Motor Mounting Plate Option, page 124 for details.*

Table 3 Motor Adapter Dimensions (mm)

Motor Adapter	Thickness [2] c Min.	Motor Shaft d2 Max. [1]	X	Wt. lbs.
ME10	21	19	40	5
ME20	24	32	50	8
ME30	25	38	60	15
ME40	33	48	88	28
ME50	43	60	81.5	42

1) If an adapter bushing is required it will be supplied as a component of the motor mounting plate.

2) Motor plate maximum thickness (c) will vary with motor shaft length but will not be less than shown.

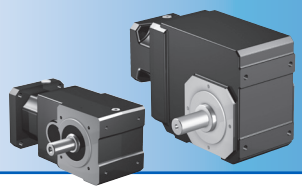

Dimensional Data

Table 1 K Series Unit Dimensions (mm) – "G" Pitch Circle Diameter (PCD) Tapped Holes

Unit	a4	B	B2	b3	b4	b8	Ds	Dsa	Dss	e	H	h	ls	lsa	m1	s3	s4	t3	t4	Z_1
K1	105	90	106	30	90	70	39	78	70	90	160	60	149	163	60	M8x1.25	M8x1.25	13	13	—
K2	116	115	134	35	115	90	44	88	78	100	190	65	178	193	65	M10x1.5	M8x1.25	16	16	—
K3	132	130	146	40	130	105	44	88	84	115	213	75	190	206	75	M10x1.5	M8x1.25	16	16	—
K4	152	148	173	50	155	120	54	110	97	130	240	90	220	243	90	M12x1.75	M10x1.5	19	19	—
K5	145	160	185	40	140	125	65	115	105	130	260	160	237	254	100	M16x2	M10x1.5	26	26	312
K6	180	168	200	50	160	130	74	127	118	165	310	190	254	276	120	M16x2	M10x1.5	26	26	362
K7	195	190	226	55	180	145	85	146	138	185	342	212	278	288	125	M20x2.5	M12x1.75	31	31	403
K8	226	235	282	75	240	185	100	176.5	158	215	410	265	352	363	145	M24x3	M12x1.75	38	38	471

Table 2 "WF" Single Side Bushing – Stock Bore Sizes

	Metric (mm)	Inches														
Unit	40	1	1-3/16	1-1/4	1-3/8	1-7/16	1-1/2	1-5/8	1-11/16	1-3/4	1-7/8	1-15/16	2	2-3/16	2-3/8	2-7/16	2-3/4
K1	—	WF1-100	—	—	—	—	—	—	—	—	—	—	—	—	—	—	—
K2	—	WFK2-100	WFK2-103	WFK2-104	—	—	—	—	—	—	—	—	—	—	—	—	—
K3	—	WF3-100	WF3-103	WF3-104	WF3-106	WF3-107	WF3-108	—	—	—	—	—	—	—	—	—	—
K4	WF4-40	—	—	WF4-104	—	WF4-107	WF4-108	—	—	—	—	—	—	—	—	—	—
K5	WF5-40	—	—	—	—	WF5-107	WF5-108	—	—	—	—	WF5-115	WF5-200	—	—	—	—
K6	—	—	—	—	—	WF6-107	WF6-108	—	—	—	—	WF6-115	WF6-200	WF6-203	—	—	—
K7	—	—	—	—	—	—	—	—	—	—	—	WF7-115	WF7-200	—	WF7-206	—	—
K8	—	—	—	—	—	—	—	—	—	—	—	—	—	WF8-203	WF8-206	WF8-207	WF8-212

NOTE: *A complete bushing kit includes the locking ring assembly, tapered cone, support ring, and all hardware to mount the kit into the reducer. The WF1-100 bushing does not have a tapered cone. The optional cover caps can be ordered separately*

Table 4 K Series Unit Dimensions (mm)

	ME10			ME20			ME30			ME40			ME50			Wt.
Unit	C	m	n	C	m	n	C	m	n	C	m	n	C	m	n	lbs.
K102	224	124	36	238	128	36	—	—	—	—	—	—	—	—	—	31
K202	248	143	46	262	147	46	274	149	46	—	—	—	—	—	—	40
K203	285	180	46	—	—	—	—	—	—	—	—	—	—	—	—	53
K302	278	163	52.5	292	167	52.5	304	169	52.5	—	—	—	—	—	—	67
K303	315	200	52.5	335	210	16	—	—	—	—	—	—	—	—	—	73
K402	—	—	—	327	187	60	339	189	60	370	192	60	—	—	—	93
K403	350	220	60	370	230	23	—	—	—	—	—	—	—	—	—	100
K513	—	—	—	322	172	15	334	174	15	365	177	15	—	—	—	106
K514	—	—	—	365	215	15	—	—	—	—	—	—	—	—	—	109
K613	—	—	—	361	191	18	373	193	18	404	196	18	411.5	210	18	170
K614	—	—	—	404	234	18	—	—	—	—	—	—	—	—	—	177
K713	—	—	—	—	—	—	406	221	20	437	224	20	443.5	237	20	221
K714	—	—	—	438	263	20	468	283	20	—	—	—	—	—	—	234
K813	—	—	—	—	—	—	452	247	24	482	249	24	488.5	262	24	309
K814	—	—	—	—	—	—	513	308	24	553	320	5	—	—	—	331

For approximate weight, add adapter weight from Table 3 and unit weight from Table 4.

K Series with DOUBLE "W" Wobble Free Bushing Output

"G" Pitch Circle Diameter (PCD) Tapped Holes

K102WG thru K403WG

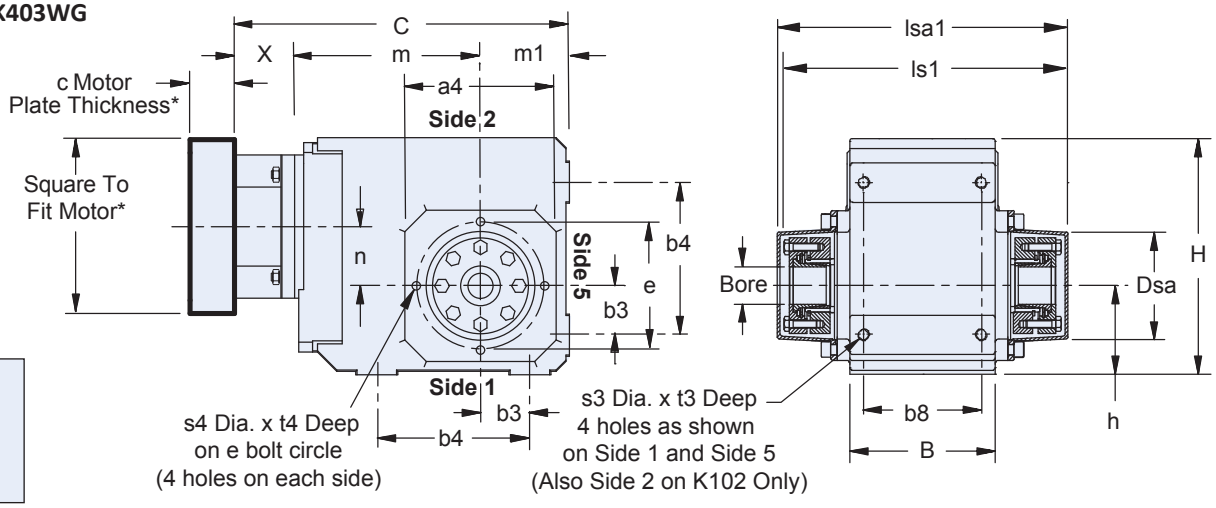

** See Motor Mounting Plate Option, page 124 for details.*

Important: A **1/32"** x 45° chamfer minimum is recommended for the shaft end.
The bushing will accept a shaft with a tolerance of +0.000/-0.005 inches.

K513WG thru K814WG

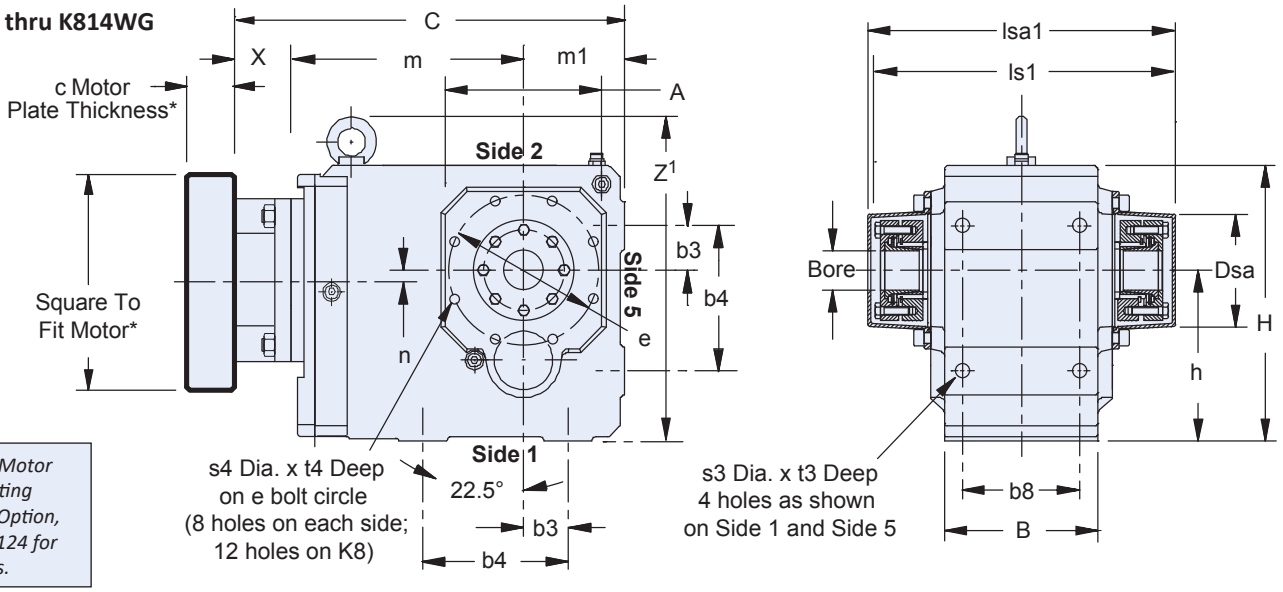

** See Motor Mounting Plate Option, page 124 for details.*

Table 3 Motor Adapter Dimensions (mm)

Motor Adapter	Thickness [2] c Min.	Motor Shaft d2 Max. [1]	X	Wt. lbs.
ME10	21	19	40	5
ME20	24	32	50	8
ME30	25	38	60	15
ME40	33	48	88	28
ME50	43	60	81.5	42

1) If an adapter bushing is required it will be supplied as a component of the motor mounting plate.
2) Motor plate maximum thickness (c) will vary with motor shaft length but will not be less than shown.

Dimensional Data

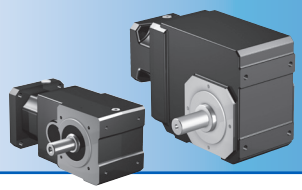

Table 1 K Series Unit Dimensions (mm) – "G" Pitch Circle Diameter (PCD) Tapped Holes

Unit	a4	B	b3	b4	b8	Dsa	e	H	h	ls1	lsa1	m1	s3	s4	t3	t4	Z[1]
K1	105	90	30	90	70	78	90	160	60	194	198	60	M8x1.25	M8x1.25	13	13	—
K2	116	115	35	115	90	88	100	190	65	226	238	65	M10x1.5	M8x1.25	16	16	—
K3	132	130	40	130	105	88	115	213	75	239	253	75	M10x1.5	M8x1.25	16	16	—
K4	152	148	50	155	120	110	130	240	90	281	295	90	M12x1.75	M10x1.5	19	19	—
K5	145	160	40	140	125	115	130	260	160	295	307	100	M16x2	M10x1.5	26	26	312
K6	180	168	50	160	130	127	165	310	190	322	336	120	M16x2	M10x1.5	26	26	362
K7	195	190	55	180	145	146	185	342	212	383	390	125	M20x2.5	M12x1.75	31	31	403
K8	226	235	75	240	185	176.5	215	410	265	458	474	145	M24x3	M12x1.75	38	38	471

Table 2 "WFB" Double Side Bushing – Stock Bore Sizes

	Metric (mm)	Inches															
Unit	40	1	1-3/16	1-1/4	1-3/8	1-7/16	1-1/2	1-5/8	1-11/16	1-3/4	1-7/8	1-15/16	2	2-3/16	2-3/8	2-7/16	2-3/4
K1	—	WFB1-100	—	—	—	—	—	—	—	—	—	—	—	—	—	—	—
K2	—	WFBK2-100	WFBK2-103	WFBK2-104	—	—	—	—	—	—	—	—	—	—	—	—	—
K3	—	WFB3-100	WFB3-103	WFB3-104	WFB3-106	WFB3-107	WFB3-108	—	—	—	—	—	—	—	—	—	—
K4	WFB4-40	—	—	WFB4-104	—	WFB4-107	WFB4-108	—	—	—	—	—	—	—	—	—	—
K5	WFB5-40	—	—	—	—	WFB5-107	WFB5-108	—	—	—	—	WFB5-115	WFB5-200	—	—	—	—
K6	—	—	—	—	—	WFB6-107	WFB6-108	—	—	—	—	WFB6-115	WFB6-200	WFB6-203	—	—	—
K7	—	—	—	—	—	—	—	—	—	—	—	WFB7-115	WFB7-200	—	WFB7-206	—	—
K8	—	—	—	—	—	—	—	—	—	—	—	—	—	WFB8-203	WFB8-206	WFB8-207	WFB8-212

NOTE: *A complete bushing kit includes the locking ring assembly, tapered cone, support ring, and all hardware to mount the kit into the reducer. The WFB1-100 bushing does not have a tapered cone.*

Table 4 K Series Unit Dimensions (mm)

	ME10			ME20			ME30			ME40			ME50			Wt.
Unit	C	m	n	C	m	n	C	m	n	C	m	n	C	m	n	lbs.
K102	224	124	36	238	128	36	—	—	—	—	—	—	—	—	—	31
K202	248	143	46	262	147	46	274	149	46	—	—	—	—	—	—	40
K203	285	180	46	—	—	—	—	—	—	—	—	—	—	—	—	53
K302	278	163	52.5	292	167	52.5	304	169	52.5	—	—	—	—	—	—	67
K303	315	200	52.5	335	210	16	—	—	—	—	—	—	—	—	—	73
K402	—	—	—	327	187	60	339	189	60	370	192	60	—	—	—	93
K403	350	220	60	370	230	23	—	—	—	—	—	—	—	—	—	100
K513	—	—	—	322	172	15	334	174	15	365	177	15	—	—	—	106
K514	—	—	—	365	215	15	—	—	—	—	—	—	—	—	—	109
K613	—	—	—	361	191	18	373	193	18	404	196	18	411.5	210	18	170
K614	—	—	—	404	234	18	—	—	—	—	—	—	—	—	—	177
K713	—	—	—	—	—	—	406	221	20	437	224	20	443.5	237	20	221
K714	—	—	—	438	263	20	468	283	20	—	—	—	—	—	—	234
K813	—	—	—	—	—	—	452	247	24	482	249	24	488.5	262	24	309
K814	—	—	—	—	—	—	513	308	24	553	320	5	—	—	—	331

For approximate weight, add adapter weight from Table 3 and unit weight from Table 4.

K Series with "S" Shrink Ring Output

"G" Pitch Circle Diameter (PCD) Tapped Holes

K102SG thru K403SG

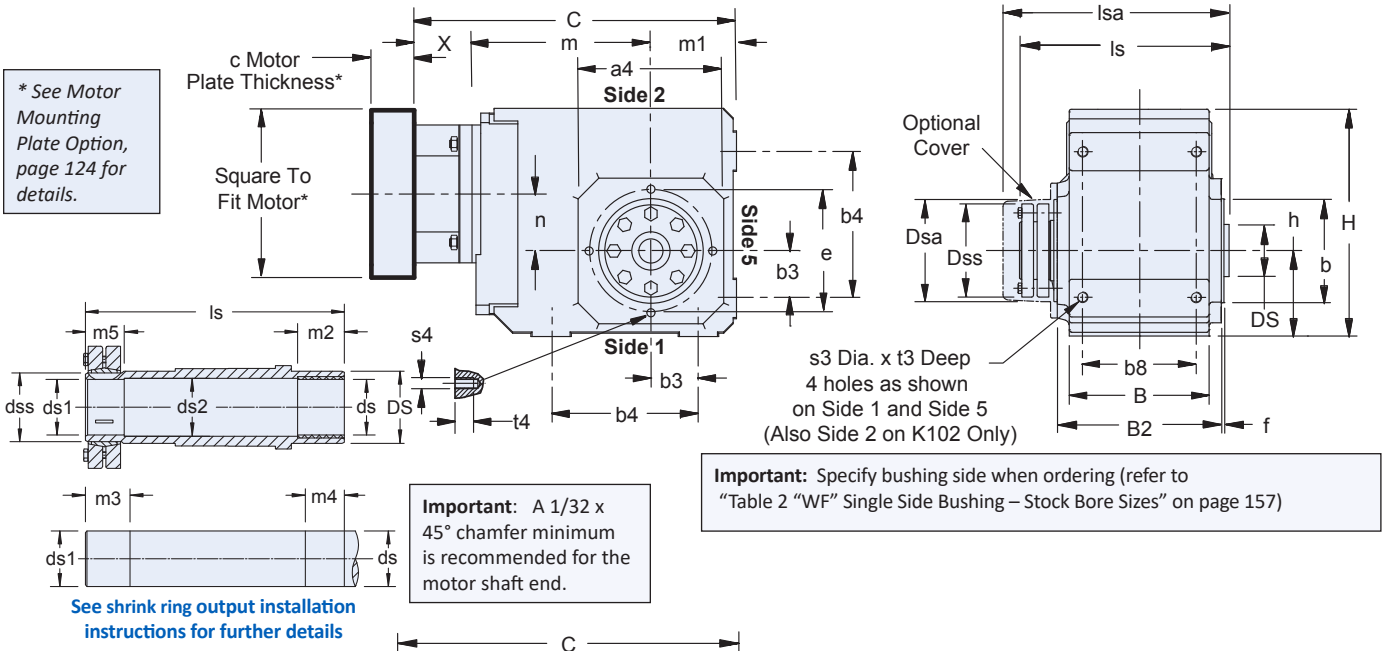

** See Motor Mounting Plate Option, page 124 for details.*

Important: A 1/32 x 45° chamfer minimum is recommended for the motor shaft end.

Important: Specify bushing side when ordering (refer to "Table 2 "WF" Single Side Bushing – Stock Bore Sizes" on page 157)

See shrink ring output installation instructions for further details

K513SG thru K1014SG

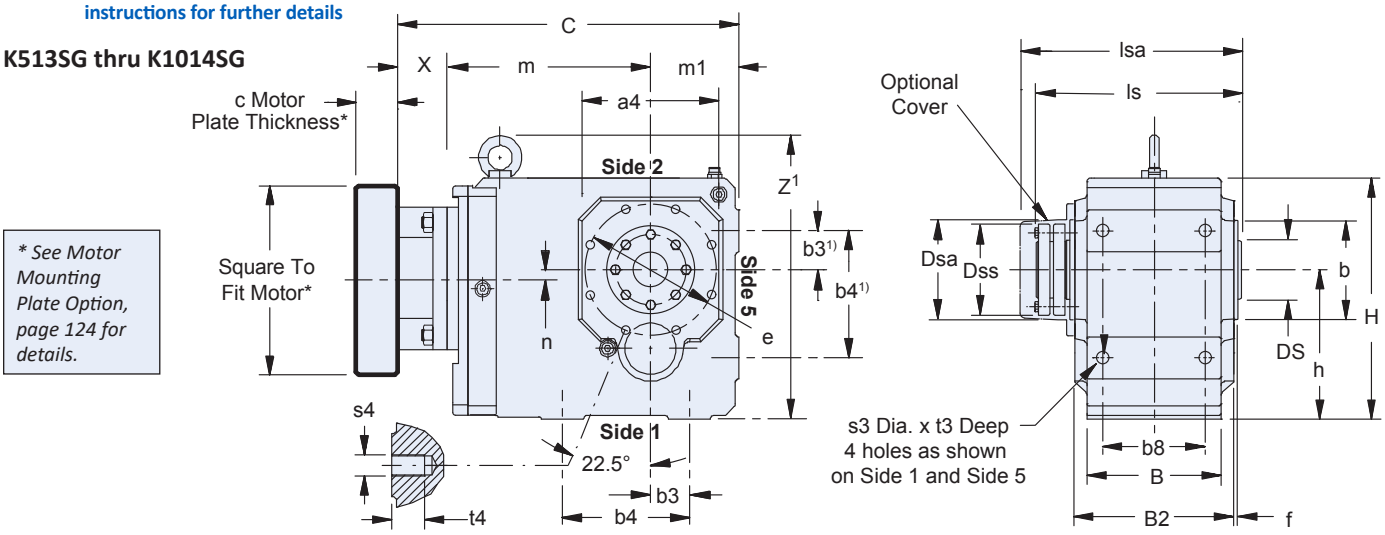

** See Motor Mounting Plate Option, page 124 for details.*

Size K10 Mounting Feet (Dimensions b3 and b4)

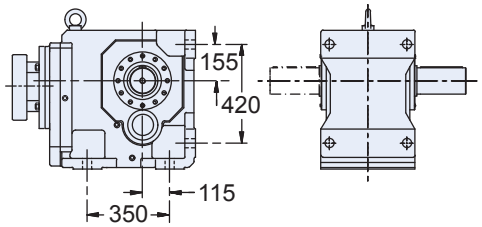

2) Mounting feet are integral on the K10 housing. Note that b3 = 155 and b4 = 420 on Side 5 of the K10. Hole locations are as shown above.

Table 3 Motor Adapter Dimensions (mm)

Motor Adapter	Thickness [3] c Min.	Motor Shaft d2 Max. [2]	X	Wt. lbs.
ME10	21	19	40	5
ME20	24	32	50	8
ME30	25	38	60	15
ME40	33	48	88	28
ME50	43	60	81.5	42

[2] If an adapter bushing is required it will be supplied as a component of the motor mounting plate.

[3] Motor plate maximum thickness (c) will vary with motor shaft length but will not be less than shown.

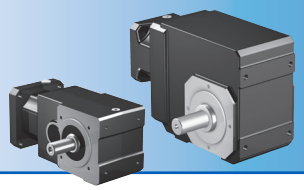

Dimensional Data

Table 1 K Series Unit Dimensions (mm) – "S" Shrink Ring Output

Unit	a4	B	B2	b	b4	b8	e	f	H	h	ls	lsa	m1	s3	s4	t3	t4	Z_1
K1	105	90	106	75_{j6}	90	70	90	3	160	60	149	163	60	M8x1.25	M8x1.25	13	13	—
K2	116	115	134	82_{j6}	115	90	100	3	190	65	178	193	65	M10x1.5	M8x1.25	16	16	—
K3	132	130	146	95_{j6}	130	105	115	3	213	75	190	206	75	M10x1.5	M8x1.25	16	16	—
K4	152	148	173	110_{j6}	155	120	130	3.5	240	90	220	243	90	M12x1.75	M10x1.5	19	19	—
K5	145	160	185	110_{j6}	140	125	130	3.5	260	160	237	254	100	M16x2	M10x1.5	26	26	312
K6	180	168	200	140_{j6}	160	130	165	3.5	310	190	254	276	120	M16x2	M10x1.5	26	26	362
K7	195	190	226	155_{j6}	180	145	185	3.5	342	212	278	314	125	M20x2.5	M12x1.75	33	31	403
K8	226	235	282	185_{j6}	240	185	215	4	410	265	352	378	145	M24x3	M12x1.75	38	38	471
K9	280	285	330	230_{j6}	280	225	265	5	495	315	418	428	180	M30x3.5	M16x2	48	48	565
K10	340	356	400	250_{h6}	350 [1]	330	300	5	591	375	483	497	225	39 [2]	10-M20	45	33	680

[1] *Mounting feet are integral on the K10 housing as shown in drawing, facing page. Note b3 = 155 and b4 = 420 on* **Side 5** *of the K10.*
[2] *s3 on K10 are thru holes, not tapped.*

Table 2 K Series Unit Dimensions (mm) – "S" Shrink Ring Output

				ds1									
Unit	b3	DS	ds	$Bore^{H7}$	Shaft	ds2	Dsa	Dss	dss	m2	m3	m4	m5
K1	30	40	25_{h9}	25	25_{h9}	25.5	80	60	30	20	34	25	29
K2	35	45	30_{h9}	30	30_{h9}	30.5	88	72	36	25	39	30	34
K3	40	50	35_{h9}	35	35_{h9}	35.5	101	80	44	30	39	35	34
K4	50	55	40_{h9}	40	40_{h9}	40.5	114	88	50	40	39	45	34
K5	40	65	50_{h9}	50	50_{h9}	50.5	116	106	62	40	44	45	39
K6	50	70	50_{h9}	50	50_{h9}	50.5	128	106	62	40	45	45	40
K7	55	85	60_{h6}	60	60_{h6}	62	161.5	138	75	40	45	45	40
K8	75	100	70_{h6}	70	70_{h6}	72	193	155	90	50	60	60	50
K9	95	120	90_{h6}	90	90_{h6}	92	244	200	120	60	70	70	60
K10	115[1]	130	100_{h6}	100	100_{h6}	102	274	230	130	60	80	70	70

[1] *Mounting feet are integral on the K10 housing as shown in drawing, facing page. Note F = 420 and FA = 155 on* **Side 5** *of the K10.*

Table 4 K Series Unit Dimensions (mm)

	ME10			ME20			ME30			ME40			ME50			Wt.
Unit	C	m	n	C	m	n	C	m	n	C	m	n	C	m	n	lbs.
K102	224	124	36	238	128	36	—	—	—	—	—	—	—	—	—	31
K202	248	143	46	262	147	46	274	149	46	—	—	—	—	—	—	40
K203	285	180	46	—	—	—	—	—	—	—	—	—	—	—	—	53
K302	278	163	52.5	292	167	52.5	304	169	52.5	—	—	—	—	—	—	67
K303	315	200	52.5	335	210	16	—	—	—	—	—	—	—	—	—	73
K402	—	—	—	327	187	60	339	189	60	370	192	60	—	—	—	93
K403	350	220	60	370	230	23	—	—	—	—	—	—	—	—	—	100
K513	—	—	—	322	172	15	334	174	15	365	177	15	—	—	—	106
K514	—	—	—	365	215	15	—	—	—	—	—	—	—	—	—	109
K613	—	—	—	361	191	18	373	193	18	404	196	18	411.5	210	18	170
K614	—	—	—	404	234	18	—	—	—	—	—	—	—	—	—	177
K713	—	—	—	—	—	—	406	221	20	437	224	20	443.5	237	20	221
K714	—	—	—	438	263	20	468	283	20	—	—	—	—	—	—	234
K813	—	—	—	—	—	—	452	247	24	482	249	24	488.5	262	24	309
K814	—	—	—	—	—	—	513	308	24	553	320	5	—	—	—	331
K913	—	—	—	—	—	—	—	—	—	562	294	25	568.5	307	25	508
K914	—	—	—	—	—	—	593	353	25	633	365	25	—	—	—	530
K1013	—	—	—	—	—	—	—	—	—	—	—	—	698.5	392	28	1055
K1014	—	—	—	—	—	—	—	—	—	763	450	28	781.5	475	28	1079

For approximate weight, add adapter weight from Table 3 and unit weight from Table 4.

K Series with "A" Hollow Output

"GD" Torque Arm Bracket Housing (Torque arm supplied by others)

K102AGD thru K403AGD

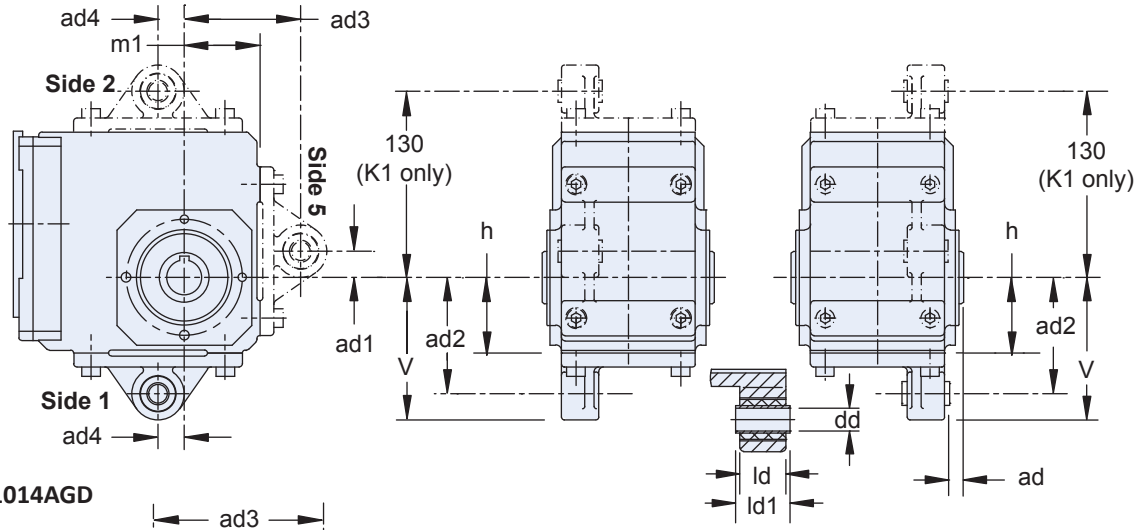

K513AGD thru K1014AGD

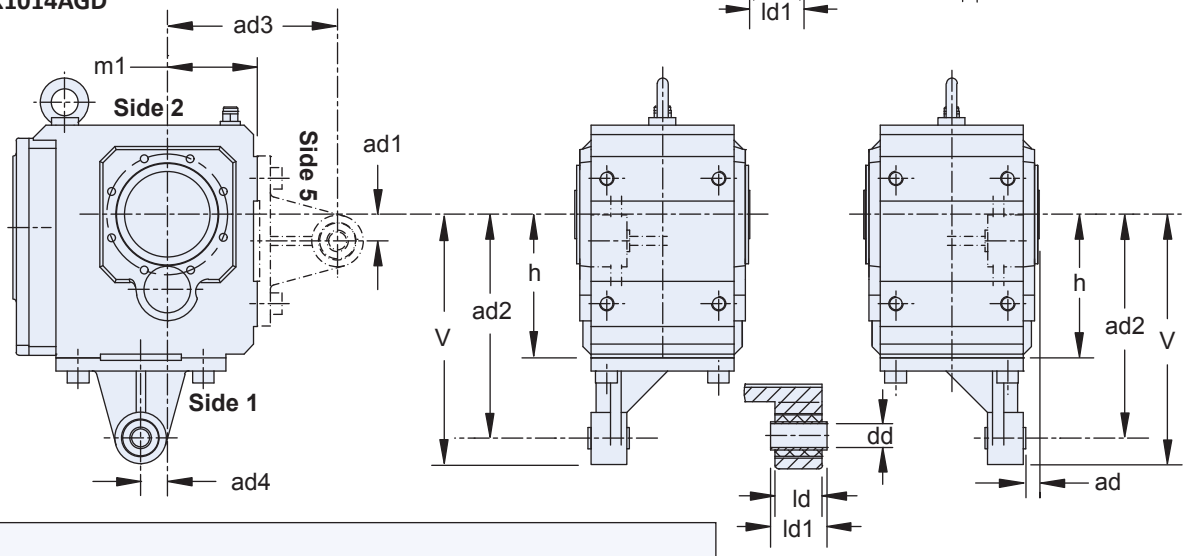

Important:
On K102 thru K1014, brackets can be mounted on Side 1 (shown) or Side 5 (opposite input side). On K102 ONLY, the bracket can also be mounted on Side 2 (top).

Table 1 K Series Unit Dimensions (mm) — "GD" Torque Arm Bracket Housing Option

Unit	ad	ad1	ad2	ad3	ad4	dd	h	ld	ld1	m1	V
K1	13	15	90	90	15	12_{H9}	60	24	28	60	111.5
K2	13.5	22.5	100	100	22.5	16_{H9}	65	32	38	65	122.5
K3	12	25	120	120	25	16_{H9}	75	32	38	75	142.5
K4	17	27.5	150	150	27.5	20_{H9}	90	40	46	90	177.5
K5	17	30	250	190	30	20_{H9}	160	40	46	100	279
K6	20.5	30	250	180	30	20_{H9}	190	40	46	120	279
K7	23	35	300	213	35	20_{H9}	212	64	70	125	334
K8	26	45	350	230	45	24_{H9}	265	102	115	145	386
K9	26	45	450	315	45	24_{H9}	315	102	115	180	487.5
K10	6	55	550	400	60	40_{H9}	375	118	124	225	610

Dimensional Data

Optional "F" Round Flange Housing Options for K Series

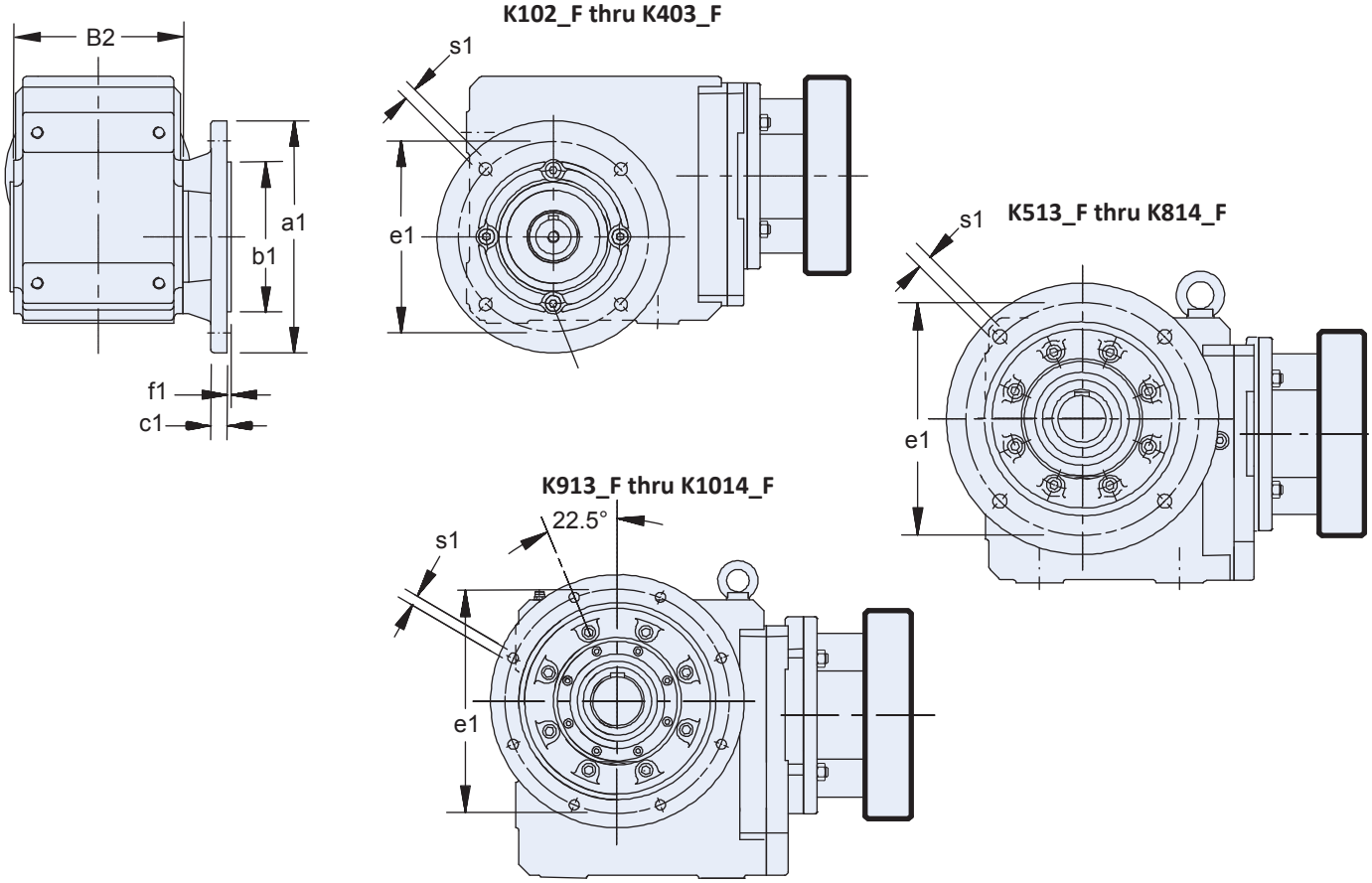

Table 1 K Series – Optional Flange Dimensions (mm)

Unit	Flange Size a1	b1	B2	c1	e1	f1	s1
K1	140	95_{j6}	106	10	115	3	9
	160 *	110_{j6}	106	10	130	3.5	9
K2	160	110_{j6}	134	12	130	3.5	9
	200 *	130_{j6}	134	12	165	3.5	11
K3	160	110_{j6}	146	14	130	3.5	9
	200 *	130_{j6}	146	14	165	3.5	11
	250	180_{j6}	146	14	215	4	14
K4	250 *	180_{j6}	173	15	215	4	14
K5	250 *	180_{j6}	185	15	215	4	14
K6	300 *	230_{j6}	200	17	265	4	14
K7	350 *	250_{h6}	226	18	300	5	18
K8	350	250_{h6}	282	18	300	5	18
	400 *	300_{h6}	282	20	350	5	18
	450	350_{h6}	282	20	400	5	18
K9	450 *	350_{h6}	330	23	400	5	18
K10	550	450_{h6}	400	25	500	5	18

** Asterisk indicates standard flange diameter. For other diameters, specify at the time of ordering.*

PKX Series: RIGHT ANGLE – Shaft Output

PKX Features

- 3:1 to 300:1 ratios (higher ratios available. Contact STOBER.)
- Quiet running (<64dB(A))
- Bearing options to suit your application needs, extending gearbox life and avoiding oversizing, (see page 189).
- Error free motor mounting and quick changeover with toleranced pilot on motor plate
- Low no load running torque, giving you more torque for your application
- Magnetic oil filtration to remove contaminants to prevent breakdowns
- Build and ship in one day
- Assembled in the USA

STOBER PKX provides a right angle option with planetary gearing. Every gearbox is made to order. STOBER will custom whatever you need to fit your application. Contact us today to learn more.

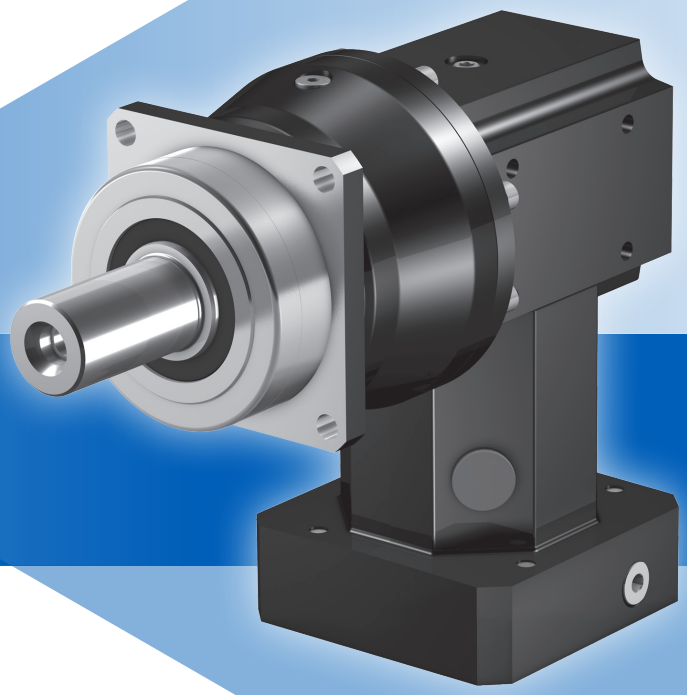

SHIPS in 1 DAY!
NO EXPEDITE FEE FOR 24 HOUR SERVICE

General Specifications

Ambient Temperature	0°C to +40°C (104°F) [Unit temperature <90°C Max]
Backlash	PKX ≤4 arcmins (see performance overview chart, page 166)
Coating	Standard Black (RAL-9005), Food option
Degree of Protection	IP65
Direction of Rotation	See page 168
Efficiency	PKX 1 stage 96%, 2 stage 94%; PK 94%
Input RPM	Up to 6,000 RPM
Installation	Requires 12.9 fasteners. See page 288, for more information
Lubrication	Lubricated for life – standard Mobil SHC629; option food grade Mobil SHC CIBUS 150
Mounting Position	Must be specified, see page 168
Warranty	5 Year Limited (2 Years on normal wear items: bearings, seals, etc.)

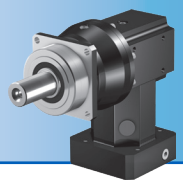

Overview

Selection Options *At-a-Glance*

Using the **Selection Data** table later in this section, select the PKX Series Gearhead with the appropriate performance and design options tailored to your motor choice and exact application requirements. Use the part number guide below as a reference to build a part number for the complete gearhead assembly.

Part Number Examples:

	1	2	3	4	5	6	7	8	9	0	!	@	#	
PKX	P	2	3	1	S	P	S	S	0040	KX301VF	0010	MF	F	EL1 *

	Design Option		Part Number Code	Description
1	**Series**		P	Planetary
2	**Size**		2 3 4 5 7 8 9	7 sizes of gearhead
3	**Generation**		3	Version of gearhead
4	**# of Stages**		1 2	One stage for ratios of ≤ 10:1 Two stage for ratios >10:1
5	**Housing**		S	Standard mounting style
6	**Output Shaft**		P G	Shaft with key Plain shaft (no key)
7	**Bearing Options**		S	Ball bearing
			D	Double row angular contact bearing (except size P2)
			Z	Cylindrical roller bearing (except size P2)("Z" cylindrical roller bearing not allowed with reduced backlash option.)
8	**Backlash**		S R	Standard Backlash Reduced Backlash
9	**Ratio**		0040	Ratios range from 4:1 to 100:1 f(0040=4:1; 0160=16:1; 1000=100:1, ect.)
0	**Secondary Unit**		KX301VF	KX Series right angle unit: 5 sizes, 1 stage, with output shaft (V) & flange (F)
!	**Secondary Unit Ratio**		0010	KX Series: Ratios from 1:1 to 3:1
@	**Motor Adapter**		MF	Motor Adapter with FlexiAdapt coupling
#	**Special Options**		F	Food Duty (Size P3 thru P5)
*	**Mounting Position**		EL1 EL2 EL3 EL4 EL5 EL6	Required special instruction for all units, see page 168

Options

ME Adapter Option

- MSS1 Seal – special input seal for longer life (For sizes P5-9). Contact factory for this option.

Coating Option

- **Standard:** For dry areas and normal conditions. All units standard coating, unless ordered with Food Duty.
- **Food Duty:** Able to withstand severe wet areas and washdown application (PKX size P3 thru P5).
- Available with multi-layer, industrial 316 stainless steel epoxy coating. Contact factory for this option.

ATEX

- ATmosphere EXplosible – rated for explosive environments. Contact factory for this option and allow additional time for delivery.

PKX Series Performance Overview

PKX Series performance is dependent on several factors including duty cycle, bearing design, gearhead size and stage configuration, among others. Use the chart below for preliminary evaluation, then use the following performance chart and selection information on the following pages for specific performance sizing and selection.

Size/Generation/# of Stages		P231	P232	P331	P332	P431	P432	P531	P532	P731	P732	P831	P832	P932
Secondary Unit		KX3		KX3		KX4	KX3	KX5	KX4	KX7	KX5	KX7		KX7
Acceleration Torque M_{2BMAX}	N	25		75		135		355		805		1840		3300
Output Torque Nom. [1] M_{2N}	N	18		53		102		2270		584		1415		2387
Torsional Stiffness C_2	Nm/arcmin	1.8		5		12		32		62		173		393
Torsional Backlash [2]	Δϕ	7		5		5		4		4		4		4
	Δϕ Reduced	–		3		3		2		2		2		–
Input Speed Max. n_{1MAX}	Continuous	3500		3500		3000	3500	3000	3000	2100	3000	2100		2100
	Cyclic	6000		6000		5500	6000	5000	5500	4000	5000	4000		4000
Efficiency (@ nom torque)	%	96	94	96	94	96	94	96	94	96	94	96	94	94
Weight	kg	3.0	3.5	3.8	4.1	7.4	6.1	13.1	11.5	26.6	22.2	42.1	46.8	71.9
	lbs	6.6	7.7	8.4	9.0	16.3	13.4	28.8	25.3	58.5	48.8	92.6	103	158.2
Noise [3]	dB(A)	≤64		≤64		≤66	≤64	≤68	≤66	≤70	≤68	≤70		≤70

Performance by Bearing Design Option [4]

S = Ball bearing **D = Double row angular contact bearing** **Z = Cylindrical roller bearing** [5]

		P2	P3	P4	P5	P7	P8	P9
Axial Load F_{2ax100}	S	500	1000	1500	2300	2900	4700	6000
	D	—	2500	4000	6000	10,000	15,500	25,000
	Z	—	600	1000	1600	2000	3600	5000
Radial Load Max $F_{2rad100}$	S	1200	2500	4000	6500	8500	13,000	18,000
	D	—	2750	4500	7000	9500	15,000	20,000
	Z	—	3000	5000	8000	10,000	18,000	27,000
Tilting Moment Max M_{2K100}	S	34	79	146	315	544	852	1539
	D	—	94	182	382	665	1095	1930
	Z	—	95	183	388	640	1179	2309

1) *Ratings based on input speed (n_1) of 1500 RPM.*
For torque at higher input speeds (M_{2NX}) solve the formula: $M_{2NX} = \frac{M_{2N}}{\sqrt[3]{\frac{n_1}{1500}}}$
where n_1 = Actual Input Speed.

2) *Tested at 1.5% of nominal torque and recorded on the output side of the gearhead.*

3) *Measurement at one (1) meter distance with input speed (n_1) of 1500 RPM.*

4) *Options S and Z are available with P Series only. See page 189 for output bearing options. Rating based on output speed (n_2) of 100 RPM. For values at other speeds see page 190.*

5) *"Z" cylindrical roller bearing not allowed with reduced backlash option.*

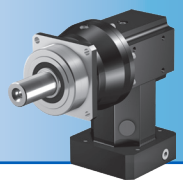

Overview

PKX Series Motor Mounting Plate Option (Motor information required with MF Motor Adapter Option)

STOBER Servo Gearheads fit the motor of your choice with the appropriate motor mounting plate assembled between the motor and the gearhead.

NOTE: When ordering a gearhead:

- Specify the motor manufacturer and part number
- Provide the motor drawing with dimensions, or specify the motor mounting dimensions (per the list shown at right)

For a precise dimension on a specific motor, or for general assistance, we recommend you contact STOBER Technical Support.

Maximum 10 working days for custom motor mounting plates.

Customer Required Dimensions for Properly Sized Motor Mounting Plate

d2	Motor Shaft Diameter (If an adapter bushing is required it will be supplied with the motor plate.)
b6	Pilot Diameter
e6	Bolt Circle Diameter
s6	Bolt Diameter
l5	Motor Shaft Length
f6	Pilot Length
a6	Square Flange (Optional – motor plate will typically be made to match this dimension.)

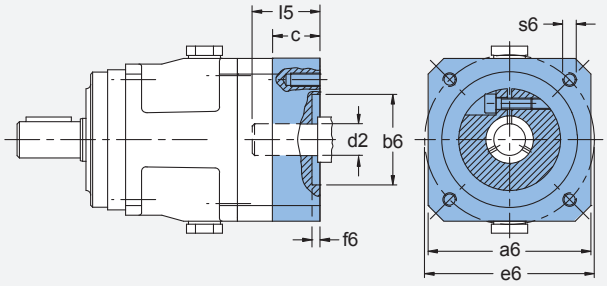

Motor Mounting Plate Dimensions — mm (Gearhead Part Number Specific)	P231KX3 P232KX3 P331KX3 P332KX3 P432KX3	P431KX4 P532KX4	P531KX5 P732KX5	P731KX7 P832KX7 P831KX7 P932KX7
Maximum Allowed Motor Shaft Dia. d2	19	24	32	38
Minimum Allowed Motor Plate Thickness c*	18	21	24	25

** Note that c motor plate thickness is determined by the motor shaft length. The minimum motor plate thickness is the value listed.*

PKX Series Output Shaft Options ("P" or "G" designated in part number, for example: P431P_0160 MF)

P Shaft with Key

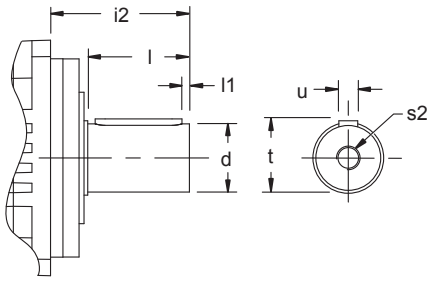

Unit	d k6	l1	l	i2	s2 (1)	t	u (2)
	mm	mm	mm	mm		mm	W x H x L
P2	12	2	22	36	M4	13.5	A4X4X18
P3	16	2	28	48	M5	18	A5X5X22
P4	22	3	36	56	M8	24.5	A6X6X28
P5	32	3	58	88	M12	35	A10X8X50
P7	40	4	82	112	M16	43	A12X8X70
P8	55	6	82	112	M20	59	A16X10X70
P9	75	7	105	143	M20	79.5	A20X12X90

G Shaft without Key

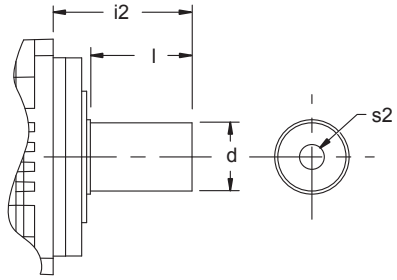

Unit	d k6	l	i2	s2 (1)
	mm	mm	mm	
P2	12	22	36	M4
P3	16	28	48	M5
P4	22	36	56	M8
P5	32	58	88	M12
P7	40	82	112	M16
P8	55	82	112	M20
P9	75	105	143	M20

(1) *The center hole in shafts with keys (Option "P") are machined to DIN 332 T2 shape DR.*

(2) *Feather keys are toleranced according to standard DIN 6885.*

PKX Series Direction of Rotation

CW

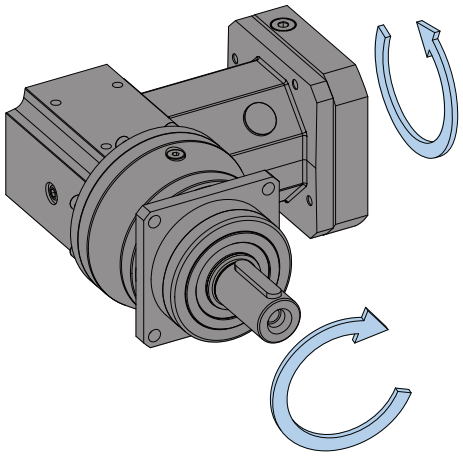

1 Stage Units (P2 - P5)

2 Stage Units (P2 - P7)

CCW

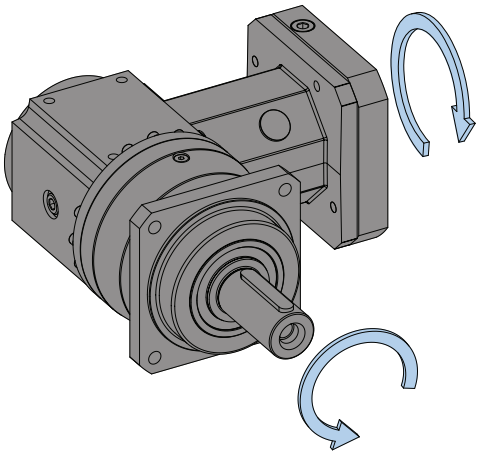

1 Stage Units (P7 & P8)

2 Stage Units (P8 & P9)

PKX Mounting Position Options

Horizontal Positions (EL1, EL2, EL5, EL6) are interchange;

Vertical Positions (EL3 and EL4) MUST BE SPECIFIED

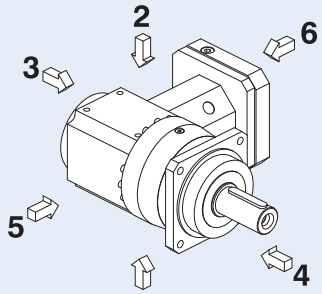

1

EL1

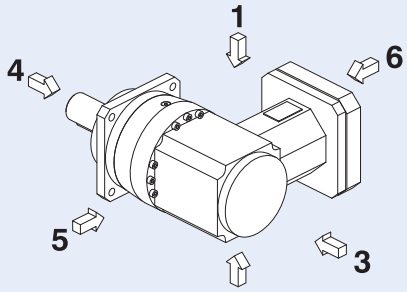

2

EL2

IMPORTANT: Mounting PKX is either vertical mounting position (EL3 or EL4) must be specified when ordering.

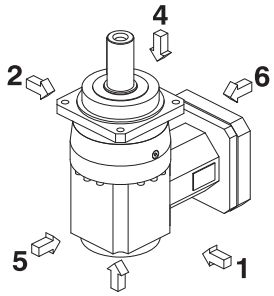

3

EL3

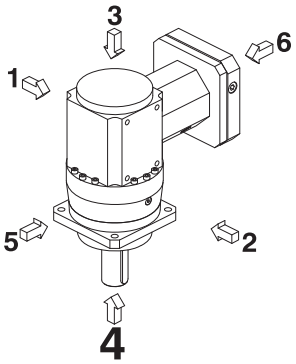

4

EL4

IMPORTANT: Mounting PKX is either vertical mounting position (EL3 or EL4) must be specified when ordering.

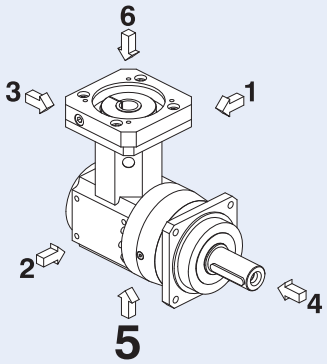

5

EL5

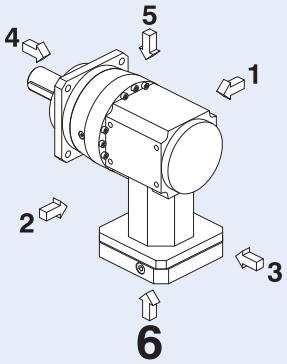

6

EL6

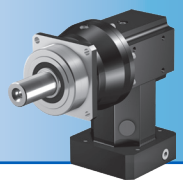

Overview

PKX Series Output Bearing Options

	S Ball Bearing	D Double Row Angular Contact Bearing	Z Cylindrical Roller Bearing ("Z" cylindrical roller bearing not allowed with reduced backlash option.)
	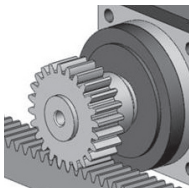	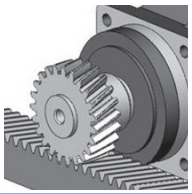	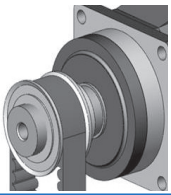
Characteristics:	• Minimal frictional torque • Good radial load capacity • Axial load approx. 35% of radial load	• Low frictional torque • Good radial bearing capacity • Axial load approx. 50% of radial load	• Very good radial load capacity • Axial load approx. 20% of radial load
Applications:	• Spur geared rack/pinion • Couplings • Belt with or without light tension	• Helical geared rack/pinion • Couplings with high axial load • Belt with or without light tension	• Prestressed belt drive • Prestressed spur rack drive • Applications with high radial loads and/or high service requirements

Permissible Output Shaft Load and Tilting Moments*

	z_2 Distance of Shaft Shoulder to Center of Output Bearing	F_{2ax100} Permitted Axial Force	$F_{2rad100}$ Permitted Radial Force ≤100RPM	$F_{2rad,acc}$ Radial Acceleration Force	M_{2K100} Permitted Tilting Torque ≤100RPM	$M_{2k,acc}$ Permitted Acceleration Tilting Torque
Unit	mm	N	N	N	Nm	Nm
S Ball Bearing						
P2	17	500	1200	1300	34	36
P3	17.5	1000	2500	2500	79	79
P4	18.5	1500	4000	4500	146	164
P5	19.5	2300	6500	7000	315	340
P7	23	2900	8000	9000	544	576
P8	24.5	4700	13,000	18,000	852	1179
P9	33	6000	18,000	27,000	1539	2309
D Double Row Angular Contact Bearing						
P3	20	2500	2750	2750	94	94
P4	22.5	4000	4500	5000	182	203
P5	25.5	6000	7000	8000	382	436
P7	29	10,000	9000	10,000	665	700
P8	32	15,500	15,000	18,000	1095	1314
P9	44	25,000	20,000	30,000	1930	2895
Z Cylindrical Roller Bearing						
P3	17.5	600	3000	3000	95	95
P4	18.5	1000	5000	5000	183	183
P5	19.5	1600	8000	8000	388	388
P7	23	2000	10,000	10,000	640	640
P8	24.5	3600	18,000	18,000	1179	1179
P9	33	5000	27,000	35,000	2309	2993

** Refer to illustration and load/life/speed definitions on page 170*

During EMERGENCY OFF operation (maximum stops per gearhead = 1000) the permissible values in the table for F_{2A}, $F2_R$, and M_{2K} can be multiplied by a factor of 2. The permissible load values given are valid with the load applied to the center of the output shaft (x_2).

PKX No Load Running Torque*

		Input Ratio T_R																		
		One Stage							Two Stage											
Unit		3	4	5	7	8	10	12	16	20	25	28	32	35	40	50	56	70	80	100
P2	Nm	–	0.16	0.13	0.13	0.13	0.10	–	0.13	0.13	0.08	0.08	0.08	0.08	0.08	0.08	0.08	0.08	0.08	0.08
P3	Nm	0.26	0.21	.016	0.16	0.16	.016	0.13	0.13	0.13	0.08	0.08	0.13	0.08	0.08	0.08	0.08	0.08	0.08	0.08
P4	Nm	0.33	0.23	0.23	0.18	0.18	0.18	0.14	0.14	0.14	0.11	0.11	0.14	0.11	0.11	0.11	0.11	0.11	0.11	0.11
P5	Nm	0.60	0.45	0.40	0.30	0.20	0.20	0.23	0.23	0.23	0.18	0.18	0.23	0.18	0.18	0.18	0.18	0.18	0.18	0.18
P7	Nm	0.83	0.53	0.43	0.33	0.23	0.23	0.30	0.30	0.30	0.20	0.20	0.30	0.20	0.20	0.20	0.20	0.20	0.20	0.20
P8	Nm	1.05	0.75	0.65	0.45	0.35	0.35	0.48	0.43	0.43	0.33	0.33	0.43	0.23	0.23	0.23	0.23	0.23	0.23	0.23
P9	Nm	–	0.92	0.72	0.52	–	0.42	–	0.55	0.55	0.45	0.45	–	0.35	0.35	0.35	–	0.35	–	0.35

** Torque is measured with the input at 2000 RPM and an ambient temperature of 20° C.*

Permissible Motor Tilting Torque

The permissible tilting torque of the motor attached to the gear unit is a result of the static and dynamic load "F" from the motor weight, mass acceleration, and vibration multiplied by the distance from the center of gravity "l_S" of the motor.

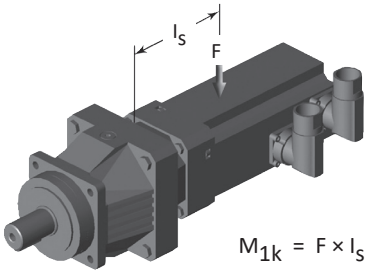

$$M_{1k} = F \times l_S \leq M_{1K}$$

M1K	KX301_MF	KX401_MF	KX501_MF	KX701_MF
Nm	12	24	50	100

PKX Series Load/Life/Speed Calculations

The permissible load and tilting moment values are based on an output speed of 100 RPM. For higher speeds the following applies, where n_2 is the desired speed:

$$F_{2AX} = \frac{F_{2ax100}}{\sqrt[3]{\frac{n_2}{100}}} \qquad F_{2RX} = \frac{F_{2rad100}}{\sqrt[3]{\frac{n_2}{100}}} \qquad M_{2KX} = \frac{M_{2K100}}{\sqrt[3]{\frac{n_2}{100}}}$$

The application output tilting moment should be determined by the following formula:

$$M_{2k,acc*} = \frac{2 \bullet F_{2ax100} \bullet y_2 + F_{2rad,acc} \bullet (x_2 + Z_2)}{1000} \leq M_{2k,acc}$$

$$M_{2k,eq*} = \sqrt[3]{\frac{n_{2b1} \bullet t_{b1} \bullet M_{2kb1}^{\ 3} + \ldots + n_{2bn} \bullet t_{bn} \bullet M_{2kbn}^{\ 3}}{n_{2b1} \bullet t_{b1} + \ldots + n_{2bn} \bullet t_{bn}}} \leq M_{2kN}$$

$$F_{2rad,eq*} = \sqrt[3]{\frac{n_{2b1} \bullet t_{b1} \bullet F_{2rb1}^{\ 3} + \ldots + n_{2bn} \bullet t_{bn} \bullet F_{2rbn}^{\ 3}}{n_{2b1} \bullet t_{b1} + \ldots + n_{2bn} \bullet t_{bn}}} \leq F_{2radN}$$

Where:

z_2	Distance of Shaft Shoulder to Center of Output Bearing	$F_{2rad,acc}$	Radial Acceleration Force
n_2	Actual Average Output Speed	$F_{2rad,acc*}$	Radial Acceleration Force at Gear Unit Output
x_2	Distance of the Shaft Shoulder to the Force Application Point	M_{2K100}	Permitted Tilting Torque ≤100RPM
y_2	Distance of the Shaft Axis to the Axial Force Application Point	$M_{2K,acc}$	Permitted Acceleration Tilting Torque
F_{2ax*}	Actual Axial Force at Gear Unit Output	$M_{2k,acc*}$	Permitted Acceleration Tilting Torque at Gear Unit Output
F_{2ax100}	Permitted Axial Force	C_{2K}	Tilting Stiffness
$F_{2rad100}$	Permitted Radial Force ≤100RPM		

All formulas shown are based on METRIC values

Upper case letters are permissible values. Lower case letters are for existing values.

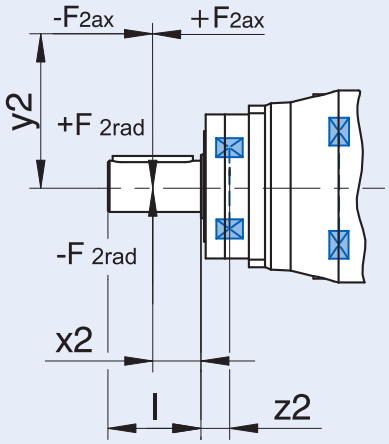

The hours of life (L_h) of the unit can be determined by the following formula:

bearing life for duty cycle ≤ 40%

L_h > 10,000 hours if M_{2K100}/M_{2A} < 1.25 and > 1
L_h > 20,000 hours if M_{2K100}/M_{2A} > 1.25 and > 1.5
L_h > 30,000 hours if M_{2K100}/M_{2A} < 1.5

bearing life for duty cycle ≥ 40%

$$L_{hA} = L_h \left(\frac{40\%}{\text{Duty Cycle}} \right)$$

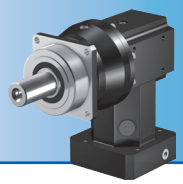

Selection Data

Exact Ratio (i)	Output Torque: Nom. M_{2N} [1] Nm	Output Torque: Accel. M_{2acc} Nm	Output Torque: Accel. Torque for Reduced Backlash M_{2accHT} Nm	Output Torque: Peak M_{2NOT} [2] Nm	Back-lash $\Delta\varphi_2$ arcmin	Red. Back-lash $\Delta\varphi_{2red}$ arcmin	Part Number* (Gearhead + Input)	Max. Input Speed RPM (n1): Continuous EL 1,2,5,6	Max. Input Speed RPM (n1): Continuous EL 3,4	Max. Input Speed RPM (n1): Cyclic All	Motor Shaft [3] Max Ø d_{MW} mm	Input Inertia J_1 kgcm²	Tors. Stiffness C_2 Nm/arcmin	Oper. Noise L_{pA} dB(A)
P2KX														
4.000	15	25	–	51	8.5	–	P231_0040KX301_0010 MF	3000	2500	4500	≤19	1.1	1.5	70
5.000	15	25	–	51	8.0	–	P231_0050KX301_0010 MF	3000	2500	4500	≤19	1.0	1.6	70
7.000	15	23	–	46	7.5	–	P231_0070KX301_0010 MF	3000	2500	4500	≤19	1.0	1.7	70
8.000	16	25	–	51	8.5	–	P231_0040KX301_0020 MF	3500	3000	5500	≤19	0.81	1.5	66
10.00	16	25	–	51	8.0	–	P231_0050KX301_0020 MF	3500	3000	5500	≤19	0.81	1.6	66
12.00	16	25	–	51	8.5	–	P231_0040KX301_0030 MF	3500	3500	6000	≤19	0.75	1.5	64
15.00	16	25	–	51	8.0	–	P231_0050KX301_0030 MF	3500	3500	6000	≤19	0.75	1.6	64
20.00	12	21	–	41	7.0	–	P231_0100KX301_0020 MF	3500	3000	5500	≤19	0.80	1.6	66
21.00	16	23	–	46	7.5	–	P231_0070KX301_0030 MF	3500	3500	6000	≤19	0.75	1.7	64
24.00	14	21	–	41	7.5	–	P231_0080KX301_0030 MF	3500	3500	6000	≤19	0.75	1.6	64
30.00	12	21	–	41	7.0	–	P231_0100KX301_0030 MF	3500	3500	6000	≤19	0.75	1.6	64
35.00	18	25	–	51	8.5	–	P232_0350KX301_0010 MF	3000	2500	4500	≤19	1.0	1.8	70
40.00	16	25	–	51	8.5	–	P232_0200KX301_0020 MF	3500	3000	5500	≤19	0.81	1.8	66
50.00	16	25	–	51	8.5	–	P232_0250KX301_0020 MF	3500	3000	5500	≤19	0.81	1.8	66
56.00	16	24	–	48	8.5	–	P232_0280KX301_0020 MF	3500	3000	5500	≤19	0.81	1.8	66
60.00	16	25	–	51	8.5	–	P232_0200KX301_0030 MF	3500	3500	6000	≤19	0.75	1.8	64
70.00	18	25	–	51	8.5	–	P232_0350KX301_0020 MF	3500	3000	5500	≤19	0.81	1.8	66
75.00	16	25	–	51	8.5	–	P232_0250KX301_0030 MF	3500	3500	6000	≤19	0.75	1.8	64
80.00	16	24	–	48	8.5	–	P232_0400KX301_0020 MF	3500	3000	5500	≤19	0.80	1.8	66
84.00	16	24	–	48	8.5	–	P232_0280KX301_0030 MF	3500	3500	6000	≤19	0.75	1.8	64
100.0	19	25	–	51	8.0	–	P232_0500KX301_0020 MF	3500	3000	5500	≤19	0.80	1.8	66
105.0	18	25	–	51	8.5	–	P232_0350KX301_0030 MF	3500	3500	6000	≤19	0.75	1.8	64
120.0	16	24	–	48	8.5	–	P232_0400KX301_0030 MF	3500	3500	6000	≤19	0.75	1.8	64
140.0	18	23	–	46	8.0	–	P232_0700KX301_0020 MF	3500	3000	5500	≤19	0.80	1.8	66
150.0	19	25	–	51	8.0	–	P232_0500KX301_0030 MF	3500	3500	6000	≤19	0.75	1.8	64
200.0	16	21	–	41	8.0	–	P232_1000KX301_0020 MF	3500	3000	5500	≤19	0.80	1.6	66
210.0	18	23	–	46	8.0	–	P232_0700KX301_0030 MF	3500	3500	6000	≤19	0.75	1.8	64
300.0	16	21	–	41	8.0	–	P232_1000KX301_0030 MF	3500	3500	6000	≤19	0.75	1.6	64

[1] *Based on input speed of 1500 RPM. See page 166 for details on torque calculations.*
[2] *Maximum momentary torque for emergency stops or heavy shock load. (Admissible stops per life of gearhead = 1,000 stops maximum.)*
* *MF = Motor adapter with FlexiAdapt® coupling*

Exact Ratio (i)	Output Torque: Nom. [1] M_{2N} Nm	Output Torque: Accel. M_{2acc} Nm	Output Torque: Accel. Torque for Reduced Backlash M_{2accHT} Nm	Output Torque: Peak [2] M_{2NOT} Nm	Back-lash $\Delta\phi_2$ arcmin	Red. Back-lash $\Delta\phi_{2red}$ arcmin	Part Number* (Gearhead + Input)	Max. Input Speed RPM (n1): Continuous EL 1,2,5,6	Max. Input Speed RPM (n1): Continuous EL 3,4	Max. Input Speed RPM (n1): Cyclic All	Motor Shaft [3] Max Ø d_{MW} mm	Input Inertia J_1 kgcm²	Tors. Stiffness C_2 Nm/arcmin	Oper. Noise L_{pA} dB(A)
P3KX														
3.000	29	38	38	68	7.5	5.5	P331_0030KX301_0010 MF	3000	2500	4500	≤19	1.3	2.4	70
4.000	39	50	50	91	6.5	4.5	P331_0040KX301_0010 MF	3000	2500	4500	≤19	1.1	3.3	70
5.000	45	63	63	113	6.0	4.0	P331_0050KX301_0010 MF	3000	2500	4500	≤19	1.1	3.8	70
6.000	29	38	38	77	7.5	5.5	P331_0030KX301_0020 MF	3500	3000	5500	≤19	0.87	2.4	66
7.000	45	69	75	138	5.5	3.5	P331_0070KX301_0010 MF	3000	2500	4500	≤19	1.0	4.2	70
8.000	39	50	50	103	6.5	4.5	P331_0040KX301_0020 MF	3500	3000	5500	≤19	0.83	3.3	66
10.00	45	63	63	129	6.0	4.0	P331_0050KX301_0020 MF	3500	3000	5500	≤19	0.82	3.8	66
12.00	39	50	50	103	6.5	4.5	P331_0040KX301_0030 MF	3500	3500	6000	≤19	0.76	3.3	64
14.00	45	69	75	138	5.5	3.5	P331_0070KX301_0020 MF	3500	3000	5500	≤19	0.81	4.2	66
15.00	45	63	63	129	6.0	4.0	P331_0050KX301_0030 MF	3500	3500	6000	≤19	0.75	3.8	64
16.00	40	63	65	126	5.5	3.5	P331_0080KX301_0020 MF	3500	3000	5500	≤19	0.81	4.1	66
20.00	36	60	60	120	5.0	3.0	P331_0100KX301_0020 MF	3500	3000	5500	≤19	0.81	4.0	66
21.00	45	69	75	138	5.5	3.5	P331_0070KX301_0030 MF	3500	3500	6000	≤19	0.75	4.2	64
24.00	40	63	65	126	5.5	3.5	P331_0080KX301_0030 MF	3500	3500	6000	≤19	0.75	4.1	64
30.00	36	60	60	120	5.0	3.0	P331_0100KX301_0030 MF	3500	3500	6000	≤19	0.75	4.0	64
32.00	45	65	65	130	5.5	3.5	P332_0160KX301_0020 MF	3500	3000	5500	≤19	0.81	5.0	66
35.00	50	75	75	150	5.5	3.5	P332_0350KX301_0010 MF	3000	2500	4500	≤19	1.0	5.2	70
40.00	50	75	75	150	5.5	3.5	P332_0200KX301_0020 MF	3500	3000	5500	≤19	0.81	5.1	66
50.00	50	75	75	150	5.5	3.5	P332_0250KX301_0020 MF	3500	3000	5500	≤19	0.81	5.1	66
56.00	45	65	70	130	5.5	3.5	P332_0280KX301_0020 MF	3500	3000	5500	≤19	0.81	5.1	66
60.00	50	75	75	150	5.5	3.5	P332_0200KX301_0030 MF	3500	3500	6000	≤19	0.75	5.1	64
64.00	48	63	65	126	5.5	3.5	P332_0320KX301_0020 MF	3500	3000	5500	≤19	0.81	4.5	66
70.00	50	75	75	150	5.5	3.5	P332_0350KX301_0020 MF	3500	3000	5500	≤19	0.81	5.2	66
75.00	50	75	75	150	5.5	3.5	P332_0250KX301_0030 MF	3500	3500	6000	≤19	0.75	5.1	64
80.00	45	65	65	130	5.5	3.5	P332_0400KX301_0020 MF	3500	3000	5500	≤19	0.80	4.8	66
84.00	45	65	70	130	5.5	3.5	P332_0280KX301_0030 MF	3500	3500	6000	≤19	0.75	5.1	64
100.0	50	75	75	150	5.0	3.0	P332_0500KX301_0020 MF	3500	3000	5500	≤19	0.80	5.0	66
105.0	50	75	75	150	5.5	3.5	P332_0350KX301_0030 MF	3500	3500	6000	≤19	0.75	5.2	64
120.0	45	65	65	130	5.5	3.5	P332_0400KX301_0030 MF	3500	3500	6000	≤19	0.75	4.8	64
140.0	53	69	69	138	5.0	3.0	P332_0700KX301_0020 MF	3500	3000	5500	≤19	0.80	4.9	66
150.0	50	75	75	150	5.0	3.0	P332_0500KX301_0030 MF	3500	3500	6000	≤19	0.75	5.0	64
200.0	46	60	60	120	5.0	3.0	P332_1000KX301_0020 MF	3500	3000	5500	≤19	0.80	4.3	66
210.0	53	69	69	138	5.0	3.0	P332_0700KX301_0030 MF	3500	3500	6000	≤19	0.75	4.9	64
300.0	46	60	60	120	5.0	3.0	P332_1000KX301_0030 MF	3500	3500	6000	≤19	0.75	4.3	64

[1] *Based on input speed of 1500 RPM. See page 166 for details on torque calculations.*
[2] *Maximum momentary torque for emergency stops or heavy shock load. (Admissible stops per life of gearhead = 1,000 stops maximum.)*
* *MF = Motor adapter with FlexiAdapt® coupling*

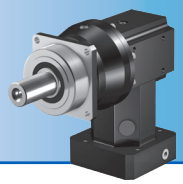

Selection Data

Exact Ratio (i)	Output Torque: Nom. M_{2N} [1]	Output Torque: Accel. M_{2acc}	Output Torque: Accel. Torque for Reduced Backlash M_{2accHT}	Output Torque: Peak M_{2NOT} [2]	Back-lash $\Delta\phi_2$	Red. Back-lash $\Delta\phi_{2red}$	Part Number* (Gearhead + Input)	Max. Input Speed RPM (n1): Continuous EL 1,2,5,6	Max. Input Speed RPM (n1): Continuous EL 3,4	Max. Input Speed RPM (n1): Cyclic	Motor Shaft [3] Max Ø d_{MW}	Input Inertia J_1	Tors. Stiffness C_2	Oper. Noise L_{pA}
	Nm	Nm	Nm	Nm	arcmin	arcmin		EL 1,2,5,6	EL 3,4	All	mm	kgcm²	Nm/ arcmin	dB(A)
P4KX							**(continued next page)**							
3.000	50	73	73	155	7.5	5.5	P431_0030KX401_0010 MF	2500	2000	4000	≤24	3.1	5.3	72
4.000	78	97	97	206	6.5	4.5	P431_0040KX401_0010 MF	2500	2000	4000	≤24	2.7	7.3	72
5.000	85	121	121	258	6.0	4.0	P431_0050KX401_0010 MF	2500	2000	4000	≤24	2.6	8.6	72
6.000	50	73	73	155	7.5	5.5	P431_0030KX401_0020 MF	2500	2500	5000	≤24	1.8	5.3	68
7.000	85	135	143	271	5.5	3.5	P431_0070KX401_0010 MF	2500	2000	4000	≤24	2.4	9.2	72
8.000	78	97	97	206	6.5	4.5	P431_0040KX401_0020 MF	2500	2500	5000	≤24	1.7	7.3	68
10.00	90	121	121	258	6.0	4.0	P431_0050KX401_0020 MF	2500	2500	5000	≤24	1.7	8.6	68
12.00	78	97	97	206	6.5	4.5	P431_0040KX401_0030 MF	3000	3000	5500	≤24	1.5	7.3	66
14.00	90	135	143	271	5.5	3.5	P431_0070KX401_0020 MF	2500	2500	5000	≤24	1.6	9.2	68
15.00	90	121	121	258	6.0	4.0	P431_0050KX401_0030 MF	3000	3000	5500	≤24	1.5	8.6	66
16.00	80	120	125	239	5.5	3.5	P431_0080KX401_0020 MF	2500	2500	5000	≤24	1.6	8.5	68
20.00	75	115	115	230	5.0	3.0	P431_0100KX401_0020 MF	2500	2500	5000	≤24	1.6	8.4	68
21.00	90	135	143	271	5.5	3.5	P431_0070KX401_0030 MF	3000	3000	5500	≤24	1.4	9.2	66
24.00	80	120	125	239	5.5	3.5	P431_0080KX401_0030 MF	3000	3000	5500	≤24	1.4	8.5	66
30.00	75	115	115	230	5.0	3.0	P431_0100KX401_0030 MF	3000	3000	5500	≤24	1.4	8.4	66
32.00	89	130	130	260	5.5	3.5	P432_0160KX301_0020 MF	3500	3000	5500	≤19	0.83	11	66
35.00	102	133	138	266	5.5	3.5	P432_0350KX301_0010 MF	3000	2500	4500	≤19	1.0	12	70
40.00	95	134	139	268	5.5	3.5	P432_0200KX301_0020 MF	3500	3000	5500	≤19	0.82	12	66
50.00	100	134	139	268	5.5	3.5	P432_0250KX301_0020 MF	3500	3000	5500	≤19	0.82	12	66
56.00	95	130	130	260	5.5	3.5	P432_0280KX301_0020 MF	3500	3000	5500	≤19	0.81	12	66
60.00	95	134	139	268	5.5	3.5	P432_0200KX301_0030 MF	3500	3500	6000	≤19	0.76	12	64
64.00	90	126	131	253	5.5	3.5	P432_0320KX301_0020 MF	3500	3000	5500	≤19	0.83	9.4	66
70.00	102	133	138	266	5.5	3.5	P432_0350KX301_0020 MF	3500	3000	5500	≤19	0.81	12	66
75.00	100	134	139	268	5.5	3.5	P432_0250KX301_0030 MF	3500	3500	6000	≤19	0.75	12	64
80.00	87	130	130	260	5.5	3.5	P432_0400KX301_0020 MF	3500	3000	5500	≤19	0.81	12	66
84.00	95	130	130	260	5.5	3.5	P432_0280KX301_0030 MF	3500	3500	6000	≤19	0.75	12	64
100.0	102	132	138	264	5.0	3.0	P432_0500KX301_0020 MF	3500	3000	5500	≤19	0.81	12	66
105.0	102	133	138	266	5.5	3.5	P432_0350KX301_0030 MF	3500	3500	6000	≤19	0.75	12	64

[1] *Based on input speed of 1500 RPM. See page 166 for details on torque calculations.*
[2] *Maximum momentary torque for emergency stops or heavy shock load. (Admissible stops per life of gearhead = 1,000 stops maximum.)*
* *MF = Motor adapter with FlexiAdapt® coupling*

Exact Ratio (i)	Output Torque: Nom. M_{2N} [1]	Output Torque: Accel. M_{2acc}	Output Torque: Accel. Torque for Reduced Backlash M_{2accHT}	Output Torque: Peak M_{2NOT} [2]	Backlash $\Delta\phi_2$	Red. Backlash $\Delta\phi_{2red}$	Part Number* (Gearhead + Input)	Max. Input Speed RPM (n1): Continuous EL 1,2,5,6	Max. Input Speed RPM (n1): Continuous EL 3,4	Max. Input Speed RPM (n1): Cyclic	Motor Shaft [3] Max Ø d_{MW}	Input Inertia J_1	Tors. Stiffness C_2	Oper. Noise L_{pA}
	Nm	Nm	Nm	Nm	arcmin	arcmin				All	mm	kgcm²	Nm/ arcmin	dB(A)
P4KX	**(continued from previous page)**													
120.0	87	130	130	260	5.5	3.5	P432_0400KX301_0030 MF	3500	3500	6000	≤19	0.75	12	64
140.0	97	127	127	253	5.0	3.0	P432_0700KX301_0020 MF	3500	3000	5500	≤19	0.81	11	66
150.0	102	132	138	264	5.0	3.0	P432_0500KX301_0030 MF	3500	3500	6000	≤19	0.75	12	64
200.0	85	110	110	220	5.0	3.0	P432_1000KX301_0020 MF	3500	3000	5500	≤19	0.81	9.0	66
210.0	97	127	127	253	5.0	3.0	P432_0700KX301_0030 MF	3500	3500	6000	≤19	0.75	11	64
300.0	85	110	110	220	5.0	3.0	P432_1000KX301_0030 MF	3500	3500	6000	≤19	0.75	9.0	64

[1] *Based on input speed of 1500 RPM. See page 166 for details on torque calculations.*
[2] *Maximum momentary torque for emergency stops or heavy shock load. (Admissible stops per life of gearhead = 1,000 stops maximum.)*
* *MF = Motor adapter with FlexiAdapt® coupling*

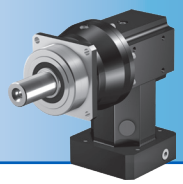

Exact Ratio (i)	Output Torque: Nom. M_{2N}	Output Torque: Accel. M_{2acc}	Output Torque: Accel. Torque for Reduced Backlash M_{2accHT}	Output Torque: Peak M_{2NOT}	Back-lash $\Delta\phi_2$	Red. Back-lash $\Delta\phi_{2red}$	Part Number* (Gearhead + Input)	Max. Input Speed RPM (n1): Continuous EL 1,2,5,6	Max. Input Speed RPM (n1): Continuous EL 3,4	Max. Input Speed RPM (n1): Cyclic	Motor Shaft [3] Max Ø d_{MW}	Input Inertia J_1	Tors. Stiffness C_2	Oper. Noise L_{pA}
	Nm	Nm	Nm	Nm	arcmin	arcmin		EL 1,2,5,6	EL 3,4	All	mm	kgcm²	Nm/ arcmin	dB(A)
P5KX							**(continued next page)**							
3.000	120	183	183	387	6.5	4.5	P531_0030KX501_0010 MF	2500	2000	3500	≤32	10	13	74
4.000	194	244	244	515	5.5	3.5	P531_0040KX501_0010 MF	2500	2000	3500	≤32	8.6	18	74
5.000	210	306	306	644	5.0	3.0	P531_0050KX501_0010 MF	2500	2000	3500	≤32	8.2	22	74
6.000	120	183	183	387	6.5	4.5	P531_0030KX501_0020 MF	2500	2500	4500	≤32	6.0	13	70
7.000	210	333	380	667	4.5	2.5	P531_0070KX501_0010 MF	2500	2000	3500	≤32	7.8	25	74
8.000	194	244	244	515	5.5	3.5	P531_0040KX501_0020 MF	2500	2500	4500	≤32	5.6	18	70
10.00	220	306	306	644	5.0	3.0	P531_0050KX501_0020 MF	2500	2500	4500	≤32	5.5	22	70
12.00	194	244	244	515	5.5	3.5	P531_0040KX501_0030 MF	3000	3000	5000	≤32	4.9	18	68
14.00	210	333	380	667	4.5	2.5	P531_0070KX501_0020 MF	2500	2500	4500	≤32	5.4	25	70
15.00	220	306	306	644	5.0	3.0	P531_0050KX501_0030 MF	3000	3000	5000	≤32	4.9	22	68
16.00	200	296	300	592	4.5	2.5	P531_0080KX501_0020 MF	2500	2500	4500	≤32	5.3	21	70
20.00	180	288	288	575	4.0	2.0	P531_0100KX501_0020 MF	2500	2500	4500	≤32	5.3	24	70
21.00	210	333	380	667	4.5	2.5	P531_0070KX501_0030 MF	3000	3000	5000	≤32	4.8	25	68
24.00	200	296	300	592	4.5	2.5	P531_0080KX501_0030 MF	3000	3000	5000	≤32	4.8	21	68
30.00	180	288	288	575	4.0	2.0	P531_0100KX501_0030 MF	3000	3000	5000	≤32	4.8	24	68
32.00	220	300	300	600	4.5	2.5	P532_0160KX401_0020 MF	2500	2500	5000	≤24	1.7	29	68
35.00	270	352	352	704	4.5	2.5	P532_0350KX401_0010 MF	2500	2000	4000	≤24	2.4	32	72
40.00	250	355	364	710	4.5	2.5	P532_0200KX401_0020 MF	2500	2500	5000	≤24	1.7	31	68
50.00	260	355	357	710	4.5	2.5	P532_0250KX401_0020 MF	2500	2500	5000	≤24	1.7	31	68
56.00	231	300	300	600	4.5	2.5	P532_0280KX401_0020 MF	2500	2500	5000	≤24	1.6	31	68
60.00	250	355	364	710	4.5	2.5	P532_0200KX401_0030 MF	3000	3000	5500	≤24	1.5	31	66
64.00	240	312	363	624	4.5	2.5	P532_0320KX401_0020 MF	2500	2500	5000	≤24	1.7	25	68
70.00	270	352	352	704	4.5	2.5	P532_0350KX401_0020 MF	2500	2500	5000	≤24	1.6	32	68
75.00	260	355	357	710	4.5	2.5	P532_0250KX401_0030 MF	3000	3000	5500	≤24	1.5	31	66
80.00	214	300	300	600	4.5	2.5	P532_0400KX401_0020 MF	2500	2500	5000	≤24	1.6	31	68
84.00	231	300	300	600	4.5	2.5	P532_0280KX401_0030 MF	3000	3000	5500	≤24	1.4	31	66
100.0	269	352	352	704	4.0	2.0	P532_0500KX401_0020 MF	2500	2500	5000	≤24	1.6	32	68
105.0	270	352	352	704	4.5	2.5	P532_0350KX401_0030 MF	3000	3000	5500	≤24	1.4	32	66

[1] *Based on input speed of 1500 RPM. See page 166 for details on torque calculations.*
[2] *Maximum momentary torque for emergency stops or heavy shock load. (Admissible stops per life of gearhead = 1,000 stops maximum.)*
* *MF = Motor adapter with FlexiAdapt® coupling*

Exact Ratio (i)	Output Torque: Nom. [1] M_{2N}	Output Torque: Accel. M_{2acc}	Output Torque: Accel. Torque for Reduced Backlash M_{2accHT}	Output Torque: Peak [2] M_{2NOT}	Back-lash $\Delta\phi_2$	Red. Back-lash $\Delta\phi_{2red}$	Part Number* (Gearhead + Input)	Max. Input Speed RPM (n1): Continuous EL 1,2,5,6	Max. Input Speed RPM (n1): Continuous EL 3,4	Max. Input Speed RPM (n1): Cyclic	Motor Shaft [3] Max Ø d_{MW}	Input Inertia J_1	Tors. Stiffness C_2	Oper. Noise L_{pA}
	Nm	Nm	Nm	Nm	arcmin	arcmin				All	mm	kgcm²	Nm/ arcmin	dB(A)
P5KX	**(continued from previous page)**													
120.0	214	300	300	600	4.5	2.5	**P532_0400KX401_0030 MF**	3000	3000	5500	≤24	1.4	31	66
140.0	263	345	357	690	4.0	2.0	**P532_0700KX401_0020 MF**	2500	2500	5000	≤24	1.6	30	68
150.0	269	352	352	704	4.0	2.0	**P532_0500KX401_0030 MF**	3000	3000	5500	≤24	1.4	32	66
200.0	221	288	288	575	4.0	2.0	**P532_1000KX401_0020 MF**	2500	2500	5000	≤24	1.6	26	68
210.0	263	345	357	690	4.0	2.0	**P532_0700KX401_0030 MF**	3000	3000	5500	≤24	1.4	30	66
300.0	221	288	288	575	4.0	2.0	**P532_1000KX401_0030 MF**	3000	3000	5500	≤24	1.4	26	66

[1] *Based on input speed of 1500 RPM. See page 166 for details on torque calculations.*
[2] *Maximum momentary torque for emergency stops or heavy shock load. (Admissible stops per life of gearhead = 1,000 stops maximum.)*
* *MF = Motor adapter with FlexiAdapt® coupling*

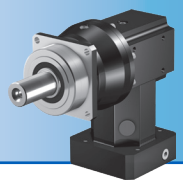

Exact Ratio (i)	Output Torque: Nom. [1] M_{2N} Nm	Output Torque: Accel. M_{2acc} Nm	Output Torque: Accel. Torque for Reduced Backlash M_{2accHT} Nm	Output Torque: Peak [2] M_{2NOT} Nm	Back-lash $\Delta\phi_2$ arcmin	Red. Back-lash $\Delta\phi_{2red}$ arcmin	Part Number* (Gearhead + Input)	Max. Input Speed RPM (n1): Continuous EL 1,2,5,6	Max. Input Speed RPM (n1): Continuous EL 3,4	Max. Input Speed RPM (n1): Cyclic All	Motor Shaft [3] Max Ø d_{MW} mm	Input Inertia J_1 kgcm²	Tors. Stiffness C_2 Nm/arcmin	Oper. Noise L_{pA} dB(A)
P7KX	**(continued next page)**													
3.000	280	364	364	680	6.5	4.5	P731_0030KX701_0010 MF	1800	1600	3000	≤38	34	38	76
4.000	388	485	485	907	5.5	3.5	P731_0040KX701_0010 MF	1800	1600	3000	≤38	29	47	76
5.000	440	606	606	1134	5.0	3.0	P731_0050KX701_0010 MF	1800	1600	3000	≤38	27	52	76
6.000	291	364	364	773	6.5	4.5	P731_0030KX701_0020 MF	1800	1800	3500	≤38	17	38	72
7.000	440	805	840	1588	4.5	2.5	P731_0070KX701_0010 MF	1800	1600	3000	≤38	26	54	76
8.000	388	485	485	1031	5.5	3.5	P731_0040KX701_0020 MF	1800	1800	3500	≤38	16	47	72
10.00	440	606	606	1289	5.0	3.0	P731_0050KX701_0020 MF	1800	1800	3500	≤38	15	52	72
12.00	388	485	485	1031	5.5	3.5	P731_0040KX701_0030 MF	2100	2100	4000	≤38	13	47	70
14.00	440	805	840	1610	4.5	2.5	P731_0070KX701_0020 MF	1800	1800	3500	≤38	15	54	72
15.00	440	606	606	1289	5.0	3.0	P731_0050KX701_0030 MF	2100	2100	4000	≤38	13	52	70
16.00	400	668	700	1336	4.5	2.5	P731_0080KX701_0020 MF	1800	1800	3500	≤38	15	53	72
20.00	350	575	575	1150	4.0	2.0	P731_0100KX701_0020 MF	1800	1800	3500	≤38	15	52	72
21.00	440	805	840	1610	4.5	2.5	P731_0070KX701_0030 MF	2100	2100	4000	≤38	13	54	70
24.00	400	668	700	1336	4.5	2.5	P731_0080KX701_0030 MF	2100	2100	4000	≤38	13	53	70
30.00	350	575	575	1150	4.0	2.0	P731_0100KX701_0030 MF	2100	2100	4000	≤38	12	52	70
32.00	450	700	700	1400	4.5	2.5	P732_0160KX501_0020 MF	2500	2500	4500	≤32	5.5	59	70
35.00	540	770	805	1540	4.5	2.5	P732_0350KX501_0010 MF	2500	2000	3500	≤32	7.9	62	74
40.00	460	805	805	1610	4.5	2.5	P732_0200KX501_0020 MF	2500	2500	4500	≤32	5.5	60	70
50.00	500	805	805	1610	4.5	2.5	P732_0250KX501_0020 MF	2500	2500	4500	≤32	5.4	62	70
56.00	538	700	700	1400	4.5	2.5	P732_0280KX501_0020 MF	2500	2500	4500	≤32	5.4	62	70
60.00	460	805	805	1610	4.5	2.5	P732_0200KX501_0030 MF	3000	3000	5000	≤32	4.9	60	68
64.00	470	730	730	1460	4.5	2.5	P732_0320KX501_0020 MF	2500	2500	4500	≤32	5.5	56	70
70.00	540	770	805	1540	4.5	2.5	P732_0350KX501_0020 MF	2500	2500	4500	≤32	5.3	62	70
75.00	500	805	805	1610	4.5	2.5	P732_0250KX501_0030 MF	3000	3000	5000	≤32	4.8	62	68
80.00	454	700	700	1400	4.5	2.5	P732_0400KX501_0020 MF	2500	2500	4500	≤32	5.3	62	70
84.00	538	700	700	1400	4.5	2.5	P732_0280KX501_0030 MF	3000	3000	5000	≤32	4.8	62	68
100.0	565	770	805	1540	4.0	2.0	P732_0500KX501_0020 MF	2500	2500	4500	≤32	5.3	62	70
105.0	540	770	805	1540	4.5	2.5	P732_0350KX501_0030 MF	3000	3000	5000	≤32	4.8	62	68

[1] *Based on input speed of 1500 RPM. See page 166 for details on torque calculations.*
[2] *Maximum momentary torque for emergency stops or heavy shock load. (Admissible stops per life of gearhead = 1,000 stops maximum.)*
* *MF = Motor adapter with FlexiAdapt® coupling*

Exact Ratio (i)	Output Torque: Nom. [1] M_{2N}	Output Torque: Accel. M_{2acc}	Output Torque: Accel. Torque for Reduced Backlash M_{2accHT}	Output Torque: Peak [2] M_{2NOT}	Back-lash $\Delta\phi_2$	Red. Back-lash $\Delta\phi_{2red}$	Part Number* (Gearhead + Input)	Max. Input Speed RPM (n1): Continuous EL 1,2,5,6	Max. Input Speed RPM (n1): Continuous EL 3,4	Max. Input Speed RPM (n1): Cyclic	Motor Shaft [3] Max Ø d_{MW}	Input Inertia J_1	Tors. Stiffness C_2	Oper. Noise L_{pA}
	Nm	Nm	Nm	Nm	arcmin	arcmin				All	mm	kgcm²	Nm/ arcmin	dB(A)
P7KX	**(continued from previous page)**													
120.0	454	700	700	1400	4.5	2.5	**P732_0400KX501_0030 MF**	3000	3000	5000	≤32	4.8	62	68
140.0	584	762	799	1525	4.0	2.0	**P732_0700KX501_0020 MF**	2500	2500	4500	≤32	5.3	59	70
150.0	565	770	805	1540	4.0	2.0	**P732_0500KX501_0030 MF**	3000	3000	5000	≤32	4.8	62	68
200.0	423	550	550	1100	4.0	2.0	**P732_1000KX501_0020 MF**	2500	2500	4500	≤32	5.3	54	70
210.0	584	762	799	1525	4.0	2.0	**P732_0700KX501_0030 MF**	3000	3000	5000	≤32	4.8	59	68
300.0	423	550	550	1100	4.0	2.0	**P732_1000KX501_0030 MF**	3000	3000	5000	≤32	4.8	54	68

[1] *Based on input speed of 1500 RPM. See page 166 for details on torque calculations.*
[2] *Maximum momentary torque for emergency stops or heavy shock load. (Admissible stops per life of gearhead = 1,000 stops maximum.)*
* *MF = Motor adapter with FlexiAdapt® coupling*

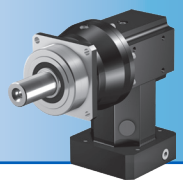

Exact Ratio (i)	Output Torque: Nom. [1] M_{2N} Nm	Output Torque: Accel. M_{2acc} Nm	Output Torque: Accel. Torque for Reduced Backlash M_{2accHT} Nm	Output Torque: Peak [2] M_{2NOT} Nm	Back-lash $\Delta\phi_2$ arcmin	Red. Back-lash $\Delta\phi_{2red}$ arcmin	Part Number* (Gearhead + Input)	Max. Input Speed RPM (n1): Continuous EL 1,2,5,6	Max. Input Speed RPM (n1): Continuous EL 3,4	Max. Input Speed RPM (n1): Cyclic All	Motor Shaft [3] Max Ø d_{MW} mm	Input Inertia J_1 kgcm²	Tors. Stiffness C_2 Nm/arcmin	Oper. Noise L_{pA} dB(A)
P8KX	**(continued next page)**													
3.000	291	364	364	680	6.5	4.5	P831_0030KX701_0010 MF	1800	1600	3000	≤38	67	59	76
4.000	388	485	485	907	5.5	3.5	P831_0040KX701_0010 MF	1800	1600	3000	≤38	43	84	76
5.000	485	606	606	1134	5.0	3.0	P831_0050KX701_0010 MF	1800	1600	3000	≤38	36	104	76
6.000	291	364	364	773	6.5	4.5	P831_0030KX701_0020 MF	1800	1800	3500	≤38	25	59	72
7.000	679	849	849	1588	4.5	2.5	P831_0070KX701_0010 MF	1800	1600	3000	≤38	31	125	76
8.000	388	485	485	1031	5.5	3.5	P831_0040KX701_0020 MF	1800	1800	3000	≤38	29	128	76
10.00	772	1213	1213	2268	4.0	2.0	P831_0050KX701_0020 MF	1800	1800	3000	≤38	28	130	76
12.00	776	970	970	1814	4.5	2.5	P831_0040KX701_0030 MF	2100	2100	4000	≤38	14	84	70
14.00	679	849	849	1804	4.5	2.5	P831_0070KX701_0020 MF	1800	1800	3500	≤38	16	125	72
15.00	485	606	606	1289	5.0	3.0	P831_0050KX701_0030 MF	2100	2100	4000	≤38	14	104	70
16.00	776	970	970	2062	4.5	2.5	P831_0080KX701_0020 MF	1800	1800	3500	≤38	16	128	72
20.00	850	1213	1213	2577	4.0	2.0	P831_0100KX701_0020 MF	1800	1800	3500	≤38	15	130	72
21.00	679	849	849	1804	4.5	2.5	P831_0070KX701_0030 MF	2100	2100	4000	≤38	13	125	70
24.00	776	970	970	2062	4.5	2.5	P831_0080KX701_0030 MF	2100	2100	4000	≤38	13	128	70
30.00	850	1213	1213	2577	4.0	2.0	P831_0100KX701_0030 MF	2100	2100	4000	≤38	13	130	70
32.00	1100	1600	1600	3200	4.5	2.5	P832_0160KX701_0020 MF	1800	1800	3500	≤38	16	163	72
35.00	1415	1840	2000	3230	4.5	2.5	P832_0350KX701_0010 MF	1800	1600	3000	≤38	26	173	76
40.00	1250	1840	2000	3230	4.5	2.5	P832_0200KX701_0020 MF	1800	1800	3500	≤38	16	169	72
50.00	1300	1840	2000	3230	4.5	2.5	P832_0250KX701_0020 MF	1800	1800	3500	≤38	15	172	72
56.00	1100	1600	1600	3200	4.5	2.5	P832_0280KX701_0020 MF	1800	1800	3500	≤38	15	168	72
60.00	1250	1840	2000	3230	4.5	2.5	P832_0200KX701_0030 MF	2100	2100	4000	≤38	13	169	70
64.00	1173	1525	1595	3049	4.5	2.5	P832_0320KX701_0020 MF	1800	1800	3500	≤38	16	157	72
70.00	1415	1840	2000	3230	4.5	2.5	P832_0350KX701_0020 MF	1800	1800	3500	≤38	15	173	72
75.00	1300	1840	2000	3230	4.5	2.5	P832_0250KX701_0030 MF	2100	2100	4000	≤38	13	172	70
80.00	1097	1600	1600	3200	4.5	2.5	P832_0400KX701_0020 MF	1800	1800	3500	≤38	15	166	72
84.00	1100	1600	1600	3200	4.5	2.5	P832_0280KX701_0030 MF	2100	2100	4000	≤38	13	168	70
100.0	1415	1840	2000	3230	4.0	2.0	P832_0500KX701_0020 MF	1800	1800	3500	≤38	15	172	72
105.0	1415	1840	2000	3230	4.5	2.5	P832_0350KX701_0030 MF	2100	2100	4000	≤38	13	173	70

[1] *Based on input speed of 1500 RPM. See page 166 for details on torque calculations.*
[2] *Maximum momentary torque for emergency stops or heavy shock load. (Admissible stops per life of gearhead = 1,000 stops maximum.)*
* *MF = Motor adapter with FlexiAdapt® coupling*

Exact Ratio (i)	Output Torque: Nom. [1] M_{2N} Nm	Output Torque: Accel. M_{2acc} Nm	Output Torque: Accel. Torque for Reduced Backlash M_{2accHT} Nm	Output Torque: Peak [2] M_{2NOT} Nm	Back-lash $\Delta\phi_2$ arcmin	Red. Back-lash $\Delta\phi_{2red}$ arcmin	Part Number* (Gearhead + Input)	Max. Input Speed RPM (n1): Continuous EL 1,2,5,6	Max. Input Speed RPM (n1): Continuous EL 3,4	Max. Input Speed RPM (n1): Cyclic All	Motor Shaft [3] Max Ø d_{MW} mm	Input Inertia J_1 kgcm²	Tors. Stiffness C_2 Nm/ arcmin	Oper. Noise L_{pA} dB(A)
P8KX	**(continued from previous page)**													
120.0	1097	1600	1600	3200	4.5	2.5	P832_0400KX701_0030 MF	2100	2100	4000	≤38	13	166	70
140.0	1238	1610	1610	3220	4.0	2.0	P832_0700KX701_0020 MF	1800	1800	3500	≤38	15	163	72
150.0	1415	1840	2000	3230	4.0	2.0	P832_0500KX701_0030 MF	2100	2100	4000	≤38	12	172	70
200.0	1015	1320	1320	2640	4.0	2.0	P832_1000KX701_0020 MF	1800	1800	3500	≤38	15	148	72
210.0	1238	1610	1610	3220	4.0	2.0	P832_0700KX701_0030 MF	2100	2100	4000	≤38	12	163	70
300.0	1015	1320	1320	2640	4.0	2.0	P832_1000KX701_0030 MF	2100	2100	4000	≤38	12	148	70

[1] *Based on input speed of 1500 RPM. See page 166 for details on torque calculations.*
[2] *Maximum momentary torque for emergency stops or heavy shock load. (Admissible stops per life of gearhead = 1,000 stops maximum.)*
* *MF = Motor adapter with FlexiAdapt® coupling*

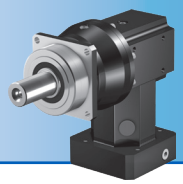

Exact Ratio (i)	Output Torque: Nom. M_{2N} [1] Nm	Output Torque: Accel. M_{2acc} Nm	Output Torque: Accel. Torque for Reduced Backlash M_{2accHT} Nm	Output Torque: Peak M_{2NOT} [2] Nm	Back-lash $\Delta\phi_2$ arcmin	Red. Back-lash $\Delta\phi_{2red}$ arcmin	Part Number* (Gearhead + Input)	Max. Input Speed RPM (n1): Continuous EL 1,2,5,6	Max. Input Speed RPM (n1): Continuous EL 3,4	Max. Input Speed RPM (n1): Cyclic All	Motor Shaft [3] Max Ø d_{MW} mm	Input Inertia J_1 kgcm²	Tors. Stiffness C_2 Nm/arcmin	Oper. Noise L_{pA} dB(A)
P9KX														
16.00	1520	1900	–	3705	4.5	–	P932_0160KX701_0010 MF	1800	1600	3000	≤38	44	348	76
20.00	1900	2375	–	4632	4.5	–	P932_0200KX701_0010 MF	1800	1600	3000	≤38	43	368	76
25.00	2375	2969	–	5789	4.5	–	P932_0250KX701_0010 MF	1800	1600	3000	≤38	36	381	76
28.00	2280	3000	–	6000	4.5	–	P932_0280KX701_0010 MF	1800	1600	3000	≤38	31	381	76
32.00	1520	1900	–	4211	4.5	–	P932_0160KX701_0020 MF	1800	1800	3500	≤38	20	348	72
35.00	2376	3300	–	6600	4.5	–	P932_0350KX701_0010 MF	1800	1600	3000	≤38	30	391	76
40.00	1900	2375	–	5263	4.5	–	P932_0200KX701_0020 MF	1800	1800	3500	≤38	19	368	72
50.00	2375	2969	–	6579	4.5	–	P932_0250KX701_0020 MF	1800	1800	3500	≤38	17	381	72
56.00	2280	3000	–	6000	4.5	–	P932_0280KX701_0020 MF	1800	1800	3500	≤38	16	381	72
60.00	1900	2375	–	5263	4.5	–	P932_0200KX701_0030 MF	2100	2100	4000	≤38	14	368	70
70.00	2376	3300	–	6600	4.5	–	P932_0350KX701_0020 MF	1800	1800	3500	≤38	16	391	72
75.00	2375	2969	–	6579	4.5	–	P932_0250KX701_0030 MF	2100	2100	4000	≤38	14	381	70
80.00	2000	3000	–	6000	4.5	–	P932_0400KX701_0020 MF	1800	1800	3500	≤38	15	384	72
84.00	2280	3000	–	6000	4.5	–	P932_0280KX701_0030 MF	2100	2100	4000	≤38	13	381	70
100.0	2295	3200	–	6400	4.0	–	P932_0500KX701_0020 MF	1800	1800	3500	≤38	15	393	72
105.0	2376	3300	–	6600	4.5	–	P932_0350KX701_0030 MF	2100	2100	4000	≤38	13	391	70
120.0	2000	3000	–	6000	4.5	–	P932_0400KX701_0030 MF	2100	2100	4000	≤38	13	384	70
140.0	2387	3156	–	6312	4.0	–	P932_0700KX701_0020 MF	1800	1800	3500	≤38	15	369	72
150.0	2295	3200	–	6400	4.0	–	P932_0500KX701_0030 MF	2100	2100	4000	≤38	13	393	70
200.0	1692	2200	–	4400	4.0	–	P932_1000KX701_0020 MF	1800	1800	3500	≤38	15	320	72
210.0	2387	3156	–	6312	4.0	–	P932_0700KX701_0030 MF	2100	2100	4000	≤38	13	369	70
300.0	1692	2200	–	4400	4.0	–	P932_1000KX701_0030 MF	2100	2100	4000	≤38	13	320	70

[1] *Based on input speed of 1500 RPM. See page 166 for details on torque calculations.*
[2] *Maximum momentary torque for emergency stops or heavy shock load. (Admissible stops per life of gearhead = 1,000 stops maximum.)*
* *MF = Motor adapter with FlexiAdapt® coupling*

PKX Series

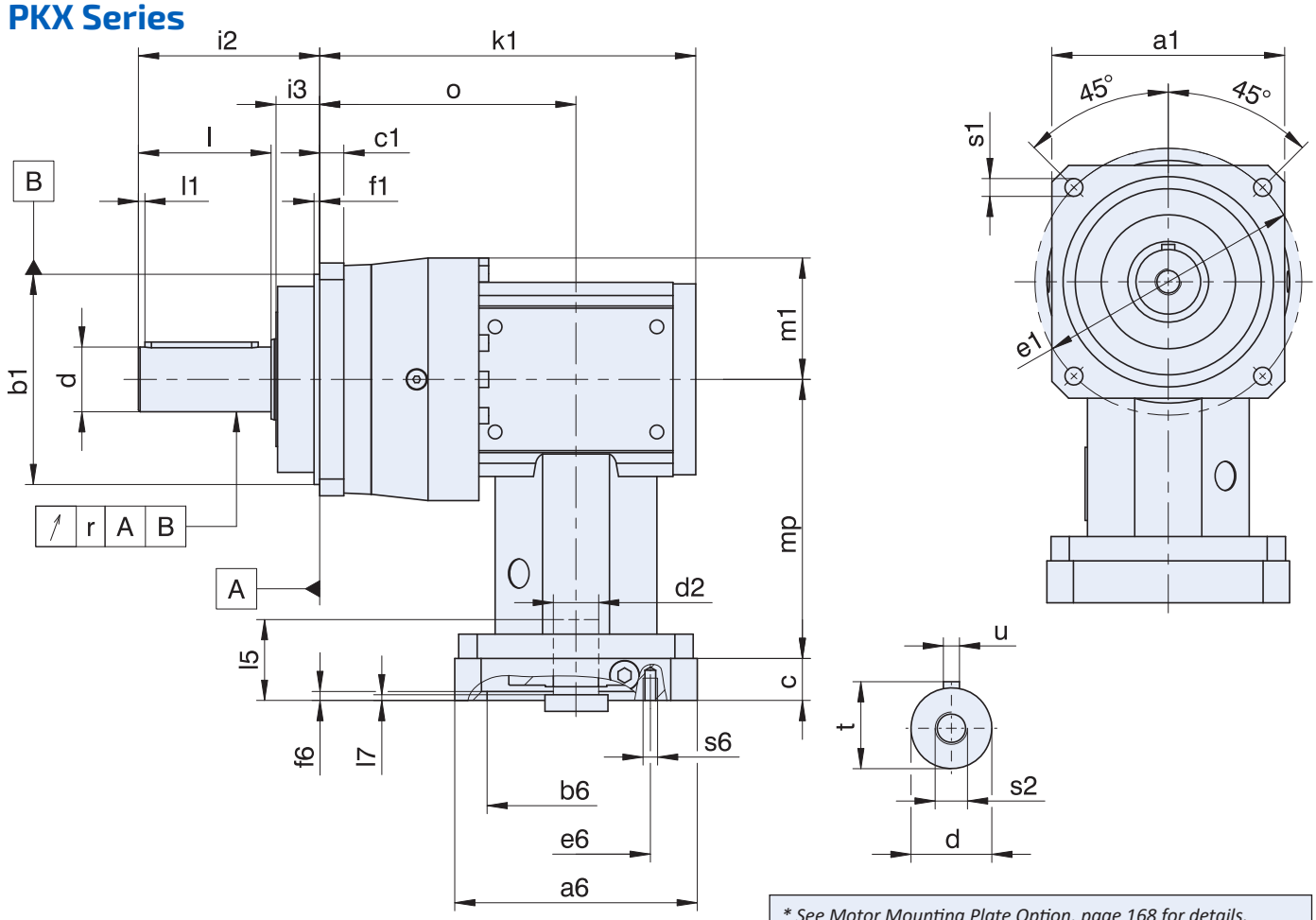

** See Motor Mounting Plate Option, page 168 for details.*
*** See Output Shaft Options, page 189 for details.*

Table 1 Dimensions (mm)

Unit	Øa1	Øb1	c1	Ød	Øe1	f1	i2	i3	k1	l	l1	m1	o	r	Øs1	s2	t	u
P231_KX301	55	50^{h6}	6	12^{k6}	63	7.0	36	12	124.0	22	2	31	84.0	–	5.5	M4	13.5	A4×4×18
P232_KX301	55	50^{h6}	6	12^{k6}	63	7.0	36	12	156.0	22	2	31	116.0	–	5.5	M4	13.5	A4×4×18
P331_KX301	72	60^{h6}	7	16^{k6}	75	7.5	48	18	131.0	28	2	36	91.0	0.025	5.5	M5	18.0	A5×5×22
P332_KX301	72	60^{h6}	7	16^{k6}	75	7.5	48	18	165.5	28	2	38	125.5	0.025	5.5	M5	18.0	A5×5×22
P431_KX401	76	70^{h6}	9	22^{k6}	85	7.5	56	18	165.0	36	3	49	115.0	0.025	6.6	M8	24.5	A6×6×28
P432_KX301	76	70^{h6}	9	22^{k6}	85	7.5	56	18	180.0	36	3	50	140.0	0.025	6.6	M8	24.5	A6×6×28
P531_KX501	101	90^{h6}	10	32^{k6}	120	15.0	88	28	187.5	58	3	58	128.5	0.030	9.0	M12	35.0	A10×8×50
P532_KX401	101	90^{h6}	10	32^{k6}	120	15.0	88	28	207.0	58	3	60	157.0	0.030	9.0	M12	35.0	A10×8×50
P731_KX701	144	130^{h6}	15	40^{k6}	165	3.5	112	27	232.5	82	4	75	158.5	0.035	11.0	M16	43.0	A12×8×70
P732_KX501	144	130^{h6}	15	40^{k6}	165	3.5	112	27	255.5	82	4	75	196.5	0.035	11.0	M16	43.0	A12×8×70
P831_KX701	190	160^{h6}	15	55^{k6}	215	10.0	112	27	267.0	82	6	102	193.0	0.035	13.5	M20	59.0	A16×10×70
P832_KX701	190	160^{h6}	15	55^{k6}	215	10.0	112	27	324.5	82	6	102	250.5	0.035	13.5	M20	59.0	A16×10×70
P932_KX701	212	180^{h6}	17	75^{k6}	250	10.0	143	34	388.0	105	7	115	314.0	0.040	17.5	M20	79.5	A20×12×90

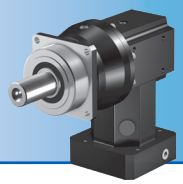

Dimensional Data

Motor Mounting Plate

Example dimensions for the motor connection

Type	Øb6	Øe6	Ød2max	l5	□a6	c	f6	l7	s6
P_KX301_MF	60^{H7}	75	19	40	75	18	3.5	5.5	M5
P_KX401_MF	95^{H7}	115	24	42	100	21	4.0	4.5	M8
P_KX501_MF	110^{H7}	130	32	53	120	24	4.0	5.0	M8
P_KX701_MF	130^{H7}	165	38	64	150	26	5.5	8.0	M10

In the table above, you will find example dimensions for the motor connection for the MF motor adapter. **Note that when dimension c is lengthened (depending on the motor used), dimensions c6, l5 and lg are also lengthened accordingly.**

PK Series: RIGHT ANGLE – Shaft Output

PK Features

- 4:1 to 561:1 ratios (higher ratios available. Contact STOBER.)
- Quiet running (<63dB(A))
- Bearing options to suit your application needs, extending gearbox life and avoiding oversizing, (see page 209).
- Error free motor mounting and quick changeover with toleranced pilot on motor plate
- Low no load running torque, giving you more torque for your application
- Magnetic oil filtration to remove contaminants to prevent breakdowns
- Build and ship in one day
- Assembled in the USA

STOBER PK provides a right angle option with planetary gearing. It is a more compact, precise solution and can handle higher input speeds. Every gearbox is made to order. STOBER will custom whatever you need to fit your application. Contact us today to learn more.

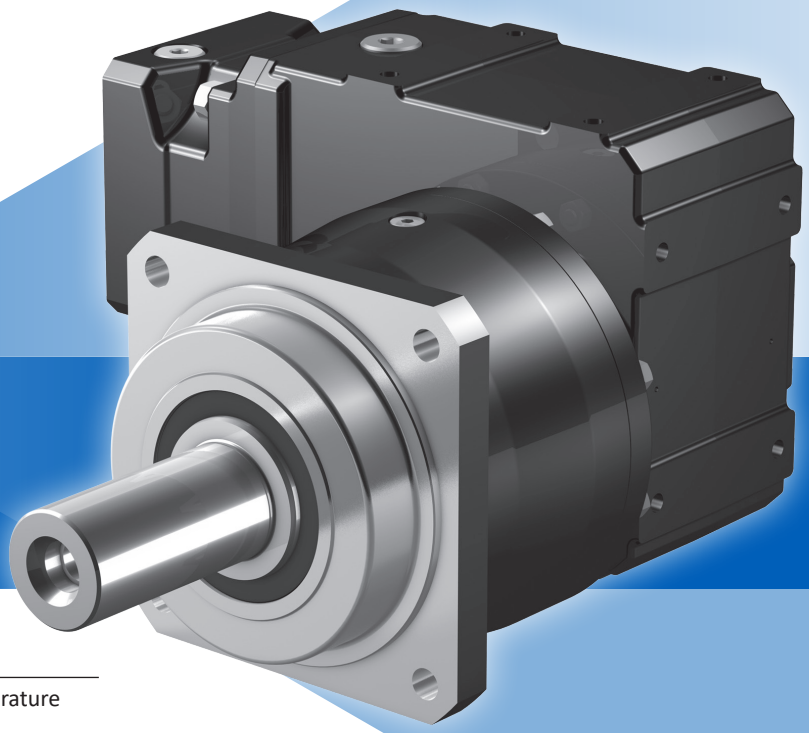

SHIPS in 1 DAY!
NO EXPEDITE FEE FOR 24 HOUR SERVICE

General Specifications

Ambient Temperature	0°C to +40°C (104°F) [Unit temperature <90°C Max]
Backlash	PK ≤3.5 (see performance overview chart, page 186)
Coating	Standard Black (RAL-9005), Corrosion Resistant option, Food option
Degree of Protection	IP65
Direction of Rotation	PK: Input and output rotate the SAME direction
Efficiency	PK 94%
Input RPM	Up to 6,000 RPM
Installation	Requires 12.9 fasteners. See page 288, for more information
Lubrication	Lubricated for life – standard Mobil SHC629; option food grade Mobil SHC CIBUS 150
Mounting Position	Must be specified, see page 188
Warranty	5 Year Limited (2 Years on normal wear items: bearings, seals, etc.)

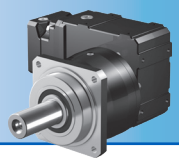

Overview

Selection Options *At-a-Glance*

Using the **Selection Data** table later in this section, select the PK Series Gearhead with the appropriate performance and design options tailored to your motor choice and exact application requirements. Use the part number guide below as a reference to build a part number for the complete gearhead assembly.

Part Number Examples:

	1	2	3	4	5	6	7	8	9	0	!	@	#	
PK	P	5	3	1	S	P	S	S	0030	K102VF	0040	ME10	F	EL1 *

	Design Option		Part Number Code	Description
1	**Series**		P	Planetary
2	**Size**		5 7 8 9	4 sizes of gearhead
3	**Generation**		3	Version of gearhead
4	**# of Stages**		1	One stage for ratios of ≤ 10:1
5	**Housing**		S	Standard mounting style
6	**Output Shaft**		P G	Shaft with key Plain shaft (no key)
7	**Bearing Options**		S	Ball bearing
			D	Double row angular contact bearing
			Z	Cylindrical roller bearing ("Z" cylindrical roller bearing not allowed with reduced backlash option.)
8	**Backlash**		S R	Standard Backlash Reduced Backlash
9	**Ratio**		0030	Ratios range from 3:1 to 100:1 for PK Series (0030=3:1; 0160=16:1; 1000=100:1, ect.)
0	**Secondary Unit**		K102VF	K Series helical/bevel unit: 4 sizes, 2 stages, with output shaft (V) & flange (F) – please specify side 3 or side 4 (see page 188 for more information)
!	**Secondary Unit Ratio**		0040	Ratios from 4:1 to 69:1 (0010=1:1; 0020=2:1; 0030=3:1)
@	**Motor Adapter**		ME10 - ME40	Motor Adapter with EasyAdapt coupling
#	**Special Options**		F	Food Duty (Size P5 only)
*	**Mounting Position**		EL1 EL2 EL3 EL4 EL5 EL6	Required special instruction for all units, see page 188

Options

ME Adapter Option

- MSS1 Seal – special input seal for longer life (For sizes P5-9). Contact factory for this option.
- Peak Torque Booster – pinion securing element for shock loads, increasing peak torque up to 80%.

Integrated Safety Brake

- ServoStop – provides dynamic braking during power failures or emergency stops in hazardous situations. Contact factory for this option.

Coating Option

- **Standard:** For dry areas and normal conditions. All units standard coating, unless ordered with Food Duty.
- **Food Duty:** Able to withstand severe wet areas and washdown application (Size P5 only).
- Available with multi-layer, industrial 316 stainless steel epoxy coating. Contact factory for this option.

PK Series Performance Overview

PK Series performance is dependent on several factors including duty cycle, bearing design, gearhead size and stage configuration, among others. Use the chart below for preliminary evaluation, then use the following performance chart and selection information on the following pages for specific performance sizing and selection.

Size/Generation/# of Stages		P531	P731		P831		P931
Secondary Unit		K1	K1	K2	K2	K3	K4
Acceleration Torque M_{2BMAX}	N	350	805		1494	1840	3105
Output Torque Nom. [1] M_{2N}	N	220	440		1000	1100	2100
Torsional Stiffness C_2	Nm/arcmin	29	53		131	128	305
Torsional Backlash [2] $\Delta\phi$	standard	≤4	≤3.5	≤4	≤3.5	≤4	≤3.5
Reduced Backlash		≤2.0	≤1.5	≤2.0	≤1.5	≤2.0	≤3.5
Input Speed Max. n_{1MAX}	Continuous	4000	4000	4000	4000	3900	3600
	Cyclic	7000	7000	6500	6500	6000	5500
Efficiency (@ nom torque)	%	94	94		94		94
Weight	kg	17.5	24.2	31.7	49.1	54.1	84.4
	lbs	38.5	53.2	69.7	108	119	185.7
Noise [3]	dB(A)	≤63	≤63	≤64	≤64	≤65	≤66

Performance by Bearing Design Option [4]

S = Ball bearing **D = Double row angular contact bearing** **Z = Cylindrical roller bearing** [5]

		P5	P7	P8	P9
Axial Load F_{2ax100}	S	2300	2900	4700	6000
	D	6000	10,000	15,500	25,000
	Z	1600	2000	3600	5000
Radial Load Max $F_{2rad100}$	S	6500	8500	13,000	18,000
	D	7000	9500	15,000	20,000
	Z	8000	10,000	18,000	27,000
Tilting Moment Max M_{2K100}	S	315	544	852	1539
	D	382	665	1095	1930
	Z	388	640	1179	2309

[1] *Ratings based on input speed (n_1) of 1500 RPM. To calculate torque at higher input speeds, contact the factory.*

[2] *Tested at 1.5% of nominal torque and recorded on the output side of the gearhead.*

[3] *Measurement at one (1) meter distance with input speed (n_1) of 1500 RPM.*

[4] *See page 209 for output bearing options. Rating based on output speed (n_2) of 100 RPM. For values at other speeds see page 190.*

[5] *"Z" cylindrical roller bearing not allowed with reduced backlash option.*

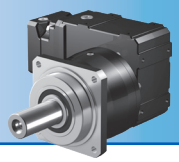

Overview

PK Series Motor Mounting Plate Option (Motor information required with ME or MF Motor Adapter Option)

STOBER Servo Gearheads fit the motor of your choice with the appropriate motor mounting plate assembled between the motor and the gearhead.

NOTE: When ordering a gearhead:

- Specify the motor manufacturer and part number
- Provide the motor drawing with dimensions, or specify the motor mounting dimensions (per the list shown at right)

For a precise dimension on a specific motor, or for general assistance, we recommend you contact STOBER Technical Support.

Maximum 10 working days for custom motor mounting plates.

Customer Required Dimensions for Properly Sized Motor Mounting Plate

d2	Motor Shaft Diameter (If an adapter bushing is required it will be supplied with the motor plate.)
b6	Pilot Diameter
e6	Bolt Circle Diameter
s6	Bolt Diameter
l5	Motor Shaft Length
f6	Pilot Length
a6	Square Flange (Optional – motor plate will typically be made to match this dimension.)

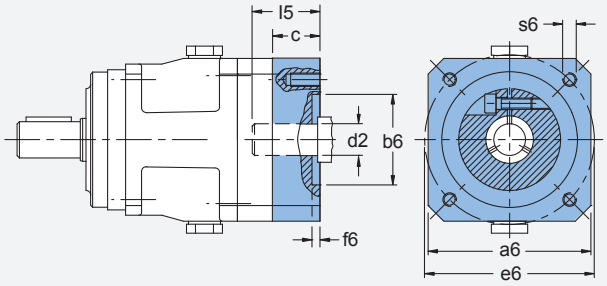

Motor Mounting Plate Dimensions — mm(Gearhead Part Number Specific)	P532	P431...L P531 P532...L P732	P531...L P731 P732...L P832	P731...L P831 P832...L P932	P831...L P931 P932...L
Maximum Allowed Motor Shaft Dia. d2	24	32	38	48	60
Minimum Allowed Motor Plate Thickness c*	21	24	26	35	43

** Note that c motor plate thickness is determined by the motor shaft length. The minimum motor plate thickness is the value listed.*

PK Series Output Shaft Options ("P" or "G" designated in part number, for example: P431P_0160 MEL)

P Shaft with Key

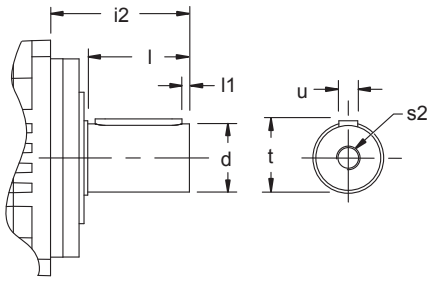

Unit	d k6	l1	l	i2	s2 (1)	t	u (2)
	mm	mm	mm	mm		mm	W x H x L
P5	32	3	58	88	M12	35	A10X8X50
P7	40	4	82	112	M16	43	A12X8X70
P8	55	6	82	112	M20	59	A16X10X70
P9	75	7	105	143	M20	79.5	A20X12X90

G Shaft without Key

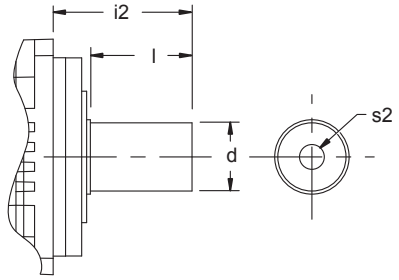

Unit	d k6	l	i2	s2 (1)
	mm	mm	mm	
P5	32	58	88	M12
P7	40	82	112	M16
P8	55	82	112	M20
P9	75	105	143	M20

(1) *The center hole in shafts with keys (Option "P") are machined to DIN 332 T2 shape DR.*

(2) *Feather keys are toleranced according to standard DIN 6885.*

PK Series Direction of Rotation

For PK units, the "P" Series planetary output unit can be mounted on either the right (Side 3) or the left (Side 4) of the "K" Series right angle secondary unit. Note CCW input direction of rotation and CW output shaft direction with both mounting configurations.

IMPORTANT: When ordering, Mounting Side 3 or Side 4 MUST BE SPECIFIED.

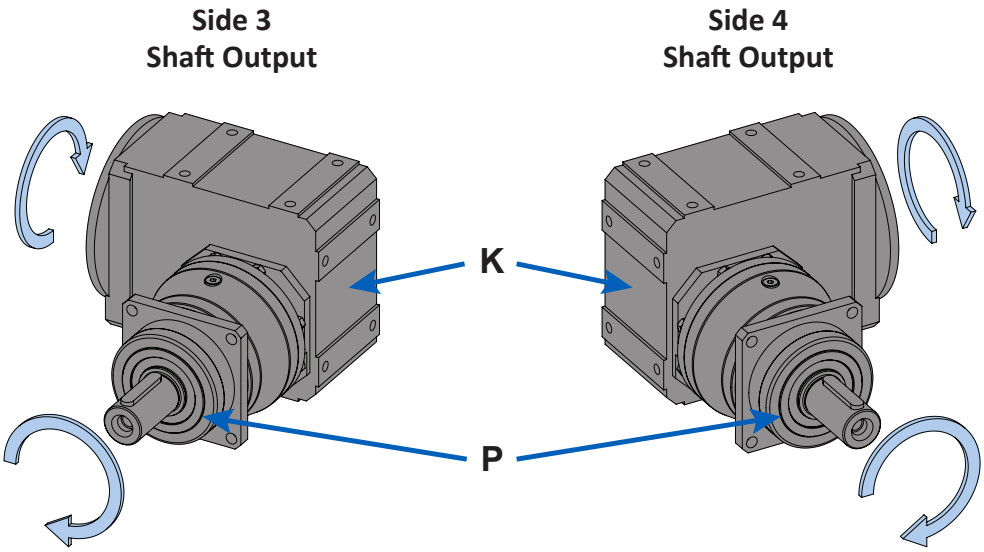

PK Mounting Position Options

When ordering any PK unit, the Mounting Position MUST BE SPECIFIED using one of the Mounting Position order codes below.

Note: the code relates to the orientation side that faces down.
For example, EL1 has side 1 facing down, EL2 has side 2 facing down, etc.

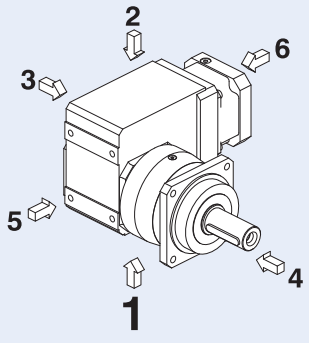

EL1

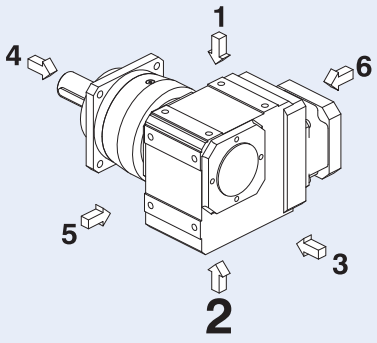

EL2

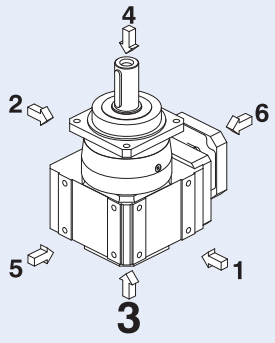

EL3

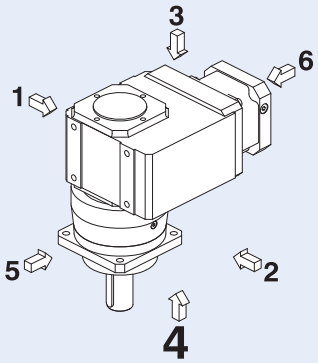

EL4

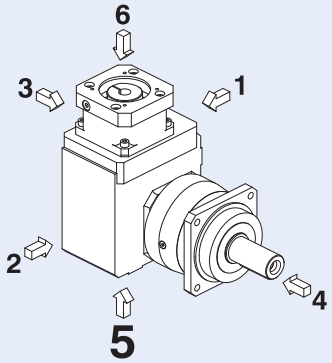

EL5

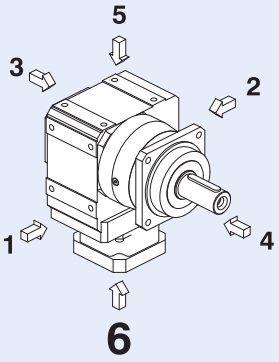

EL6

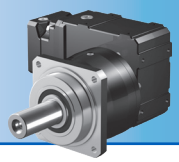

Overview

PK Series Output Bearing Options

	S Ball Bearing	D Double Row Angular Contact Bearing	Z Cylindrical Roller Bearing ("Z" cylindrical roller bearing not allowed with reduced backlash option.)
	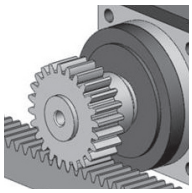	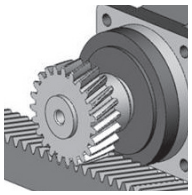	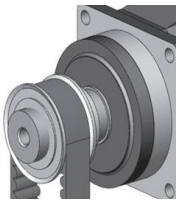
Characteristics:	• Minimal frictional torque • Good radial load capacity • Axial load approx. 35% of radial load	• Low frictional torque • Good radial bearing capacity • Axial load approx. 50% of radial load	• Very good radial load capacity • Axial load approx. 20% of radial load
Applications:	• Spur geared rack/pinion • Couplings • Belt with or without light tension	• Helical geared rack/pinion • Couplings with high axial load • Belt with or without light tension	• Prestressed belt drive • Prestressed spur rack drive • Applications with high radial loads and/or high service requirements

Permissible Output Shaft Load and Tilting Moments*

	Z_2 Distance of Shaft Shoulder to Center of Output Bearing	F_{2ax100} Permitted Axial Force	$F_{2rad100}$ Permitted Radial Force ≤100RPM	$F_{2rad,acc}$ Radial Acceleration Force	M_{2K100} Permitted Tilting Torque ≤100RPM	$M_{2k,acc}$ Permitted Acceleration Tilting Torque
Unit	mm	N	N	N	Nm	Nm
S Ball Bearing						
P5	19.5	2300	6500	7000	315	340
P7	23	2900	8000	9000	544	576
P8	24.5	4700	13,000	18,000	852	1179
P9	33	6000	18,000	27,000	1539	2309
D Double Row Angular Contact Bearing						
P5	25.5	6000	7000	8000	382	436
P7	29	10,000	9000	10,000	665	700
P8	32	15,500	15,000	18,000	1095	1314
P9	44	25,000	20,000	30,000	1930	2895
Z Cylindrical Roller Bearing						
P5	19.5	1600	8000	8000	388	388
P7	23	2000	10,000	10,000	640	640
P8	24.5	3600	18,000	18,000	1179	1179
P9	33	5000	27,000	35,000	2309	2993

** Refer to illustration and load/life/speed definitions on page 190*

During EMERGENCY OFF operation (maximum stops per gearhead = 1000) the permissible values in the table for F_{2A}, $F2_R$, and M_{2K} can be multiplied by a factor of 2. The permissible load values given are valid with the load applied to the center of the output shaft (x_2).

PK No Load Running Torque*

		Input Ratio T_R																		
		One Stage							Two Stage											
Unit		3	4	5	7	8	10	12	16	20	25	28	32	35	40	50	56	70	80	100
P5	Nm	0.60	0.45	0.40	0.30	0.20	0.20	0.23	0.23	0.23	0.18	0.18	0.23	0.18	0.18	0.18	0.18	0.18	0.18	0.18
P7	Nm	0.83	0.53	0.43	0.33	0.23	0.23	0.30	0.30	0.30	0.20	0.20	0.30	0.20	0.20	0.20	0.20	0.20	0.20	0.20
P8	Nm	1.05	0.75	0.65	0.45	0.35	0.35	0.48	0.43	0.43	0.33	0.33	0.43	0.23	0.23	0.23	0.23	0.23	0.23	0.23
P9	Nm	–	0.92	0.72	0.52	–	0.42	–	0.55	0.55	0.45	0.45	–	0.35	0.35	0.35	–	0.35	–	0.35

** Torque is measured with the input at 2000 RPM and an ambient temperature of 20° C.*

Permissible Motor Tilting Torque

The permissible tilting torque of the motor attached to the gear unit is a result of the static and dynamic load "F" from the motor weight, mass acceleration, and vibration multiplied by the distance from the center of gravity "l_S" of the motor.

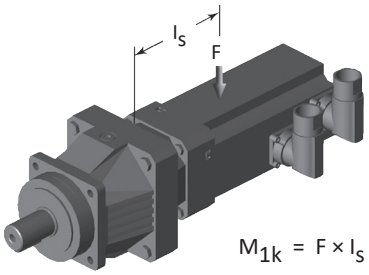

$$M_{1k} = F \times l_S \leq M_{1K}$$

M1K	ME10	ME20	ME30	ME40	ME50
Nm	25	60	125	250	600

PK Series Load/Life/Speed Calculations

All formulas shown are based on METRIC values

Upper case letters are permissible values. Lower case letters are for existing values.

The permissible load and tilting moment values are based on an output speed of 100 RPM. For higher speeds the following applies, where n_2 is the desired speed:

$$F_{2AX} = \frac{F_{2ax100}}{\sqrt[3]{\frac{n_2}{100}}} \qquad F_{2RX} = \frac{F_{2rad100}}{\sqrt[3]{\frac{n_2}{100}}} \qquad M_{2KX} = \frac{M_{2K100}}{\sqrt[3]{\frac{n_2}{100}}}$$

The application output tilting moment should be determined by the following formula:

$$M_{2k,acc*} = \frac{2 \bullet F_{2ax100} \bullet y_2 + F_{2rad,acc} \bullet (x_2 + Z_2)}{1000} \leq M_{2k,acc}$$

$$M_{2k,eq*} = \sqrt[3]{\frac{n_{2b1} \bullet t_{b1} \bullet M_{2kb1}{}^3 + \ldots + n_{2bn} \bullet t_{bn} \bullet M_{2kbn}{}^3}{n_{2b1} \bullet t_{b1} + \ldots + n_{2bn} \bullet t_{bn}}} \leq M_{2kN}$$

$$F_{2rad,eq*} = \sqrt[3]{\frac{n_{2b1} \bullet t_{b1} \bullet F_{2rb1}{}^3 + \ldots + n_{2bn} \bullet t_{bn} \bullet F_{2rbn}{}^3}{n_{2b1} \bullet t_{b1} + \ldots + n_{2bn} \bullet t_{bn}}} \leq F_{2radN}$$

Where:

z_2	Distance of Shaft Shoulder to Center of Output Bearing	$F_{2rad,acc}$	Radial Acceleration Force
n_2	Actual Average Output Speed	$F_{2rad,acc*}$	Radial Acceleration Force at Gear Unit Output
x_2	Distance of the Shaft Shoulder to the Force Application Point	M_{2K100}	Permitted Tilting Torque ≤100RPM
y_2	Distance of the Shaft Axis to the Axial Force Application Point	$M_{2K,acc}$	Permitted Acceleration Tilting Torque
F_{2ax*}	Actual Axial Force at Gear Unit Output	$M_{2k,acc*}$	Permitted Acceleration Tilting Torque at Gear Unit Output
F_{2ax100}	Permitted Axial Force	C_{2K}	Tilting Stiffness
$F_{2rad100}$	Permitted Radial Force ≤100RPM		

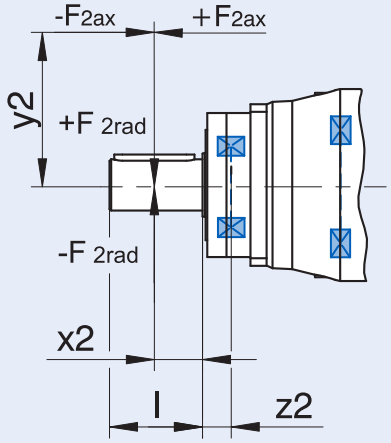

The hours of life (L_h) of the unit can be determined by the following formula:

bearing life for duty cycle ≤ 40%

L_h > 10,000 hours if M_{2K100}/M_{2A} < 1.25 and > 1
L_h > 20,000 hours if M_{2K100}/M_{2A} > 1.25 and > 1.5
L_h > 30,000 hours if M_{2K100}/M_{2A} < 1.5

bearing life for duty cycle ≥ 40%

$$L_{hA} = L_h \left(\frac{40\%}{\text{Duty Cycle}} \right)$$

Selection Data

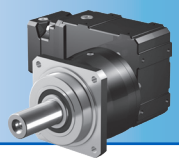

Reducer Ratio (i)		Output Torque				Back-lash/ Red	Part Number* (Gearhead + Input)	Max. Input Speed RPM (n1)			Motor Shaft [3] Max Ø	Input Inertia	Tors. Stiffness
		Nom. [1]	Accel.	Accel. Torque for Reduced Backlash	Peak [2]			Continuous		Cyclic			
Nom.	Exact	M_{2N}	M_{2acc}	M_{2accHT}	M_{2NOT}	$\Delta\phi_2$		EL 1,2	EL 3,4,5,6	All	d_{MW}	J_1	C_2
		Nm	Nm	Nm	Nm	arcmin					mm	kgcm²	Nm/ arcmin
P5K													
12.00	12/1	120	200	200	360	5.0/3.0	P531_0030K102_0040 ME10	3300	2800	5000	≤19	1.7	22
							P531_0030K102_0040 ME20				≤24	3.6	
16.00	16/1	210	300	320	480	4.5/2.5	P531_0040K102_0040 ME10	3300	2800	5000	≤19	1.6	26
							P531_0040K102_0040 ME20				≤24	3.5	
20.00	20/1	220	350	385	600	4.0/.20	P531_0050K102_0040 ME10	3300	2800	5000	≤19	1.5	29
							P531_0050K102_0040 ME20				≤24	3.4	
27.84	7600/273	220	350	385	700	4.0/.20	P531_0050K102_0056 ME10	3300	2800	5000	≤19	1.3	29
							P531_0050K102_0056 ME20				≤24	3.2	
30.00	30/1	220	350	385	700	4.0/.20	P531_0050K102_0060 ME10	3300	2800	5000	≤19	1.1	29
							P531_0050K102_0060 ME20				≤24	3.0	
33.22	299/9	220	350	385	700	4.0/.20	P531_0050K102_0066 ME10	3600	3300	5500	≤19	1.0	29
							P531_0050K102_0066 ME20				≤24	2.9	
41.55	1911/46	220	350	385	700	4.0/.20	P531_0050K102_0083 ME10	3600	3300	5500	≤19	0.93	29
							P531_0050K102_0083 ME20				≤24	2.8	
46.25	8740/189	220	350	385	700	4.0/.20	P531_0050K102_0092 ME10	3600	3300	5500	≤19	0.97	29
							P531_0050K102_0092 ME20				≤24	2.9	
57.83	1330/23	220	350	385	700	4.0/.20	P531_0050K102_0115 ME10	3600	3300	5500	≤19	0.87	29
							P531_0050K102_0115 ME20				≤24	2.8	
70.57	494/7	220	350	385	700	4.0/.20	P531_0050K102_0140 ME10	4000	3800	6000	≤19	0.82	29
							P531_0050K102_0140 ME20	3700	3700		≤24	2.7	
87.82	10,450/119	220	350	385	700	4.0/.20	P531_0050K102_0175 ME10	4000	3800	6000	≤19	0.77	29
							P531_0050K102_0175 ME20	3700	3700		≤24	2.7	
116.3	5700/49	220	350	385	700	4.0/.20	P531_0050K102_0230 ME10	4000	4000	7000	≤19	0.72	29
							P531_0050K102_0230 ME20	3700	3700	6000	≤24	2.6	
140.2	2945/21	220	350	385	700	4.0/.20	P531_0050K102_0280 ME10	4000	4000	7000	≤19	0.70	29
							P531_0050K102_0280 ME20	3700	3700	6000	≤24	2.6	
175.5	3686/21	220	350	385	700	4.0/.20	P531_0050K102_0350 ME10	4000	4000	7000	≤19	0.68	29
							P531_0050K102_0350 ME20	3700	3700	6000	≤24	2.6	
234.6	11,495/49	220	350	385	700	4.0/.20	P531_0050K102_0470 ME10	4000	4000	7000	≤19	0.63	29
280.5	5890/21	220	350	385	700	4.0/.20	P531_0050K102_0560 ME10	4000	4000	7000	≤19	0.62	29

[1] *Based on input speed of 1500 RPM. See page 186 for details on torque calculations.*
[2] *Maximum momentary torque for emergency stops or heavy shock load. (Admissible stops per life of gearhead = 1,000 stops maximum.)*
* *MF = Motor adapter with FlexiAdapt® coupling*

Reducer Ratio (i)		Output Torque				Back-lash/ Red $\Delta\phi_2$	Part Number* (Gearhead + Input)	Max. Input Speed RPM (n1)			Motor Shaft [3] Max Ø d_{MW}	Input Inertia J_1	Tors. Stiffness C_2
		Nom. [1] M_{2N}	Accel. M_{2acc}	Accel. Torque for Reduced Backlash M_{2accHT}	Peak [2] M_{2NOT}			Continuous		Cyclic			
Nom.	Exact	Nm	Nm	Nm	Nm	arcmin		EL 1,2	EL 3,4,5,6	All	mm	kgcm²	Nm/ arcmin
P7K		**(continued next page)**											
12.00	12/1	300	500	500	900	4.5/2.5	P731_0030K202_0040 ME20	3000	2600	4500	≤32	7.0	39
							P731_0030K202_0040 ME30				≤38	12	
16.00	16/1	440	677	677	1200	4.5/2.5	P731_0040K202_0040 ME20	3000	2600	4500	≤32	6.7	49
							P731_0040K202_0040 ME30				≤38	12	
20.00	20/1	440	805	840	1500	4.0/2.0	P731_0050K202_0040 ME20	3000	2600	4500	≤32	6.6	53
							P731_0050K202_0040 ME30				≤38	12	
25.89	10,535/407	440	805	840	1610	4.0/2.0	P731_0050K202_0052 ME20	3000	2600	4500	≤32	5.7	53
							P731_0050K202_0052 ME30				≤38	11	
28.00	28/1	440	633	633	841	4.0/2.0	P731_0070K102_0040 ME10	3300	2800	5000	≤19	1.6	51
							P731_0070K102_0040 ME20				≤24	3.5	52
30.00	30/1	440	677	677	900	4.0/2.0	P731_0050K202_0060 ME10	3000	2600	4500	≤19	2.4	53
			805	840	1610		P731_0050K202_0060 ME20				≤32	5.8	
							P731_0050K202_0060 ME30				≤38	11	
33.42	11,395/341	440	755	755	1003	4.0/2.0	P731_0050K202_0067 ME10	3500	3100	5000	≤19	1.8	53
			805	840	1610		P731_0050K202_0067 ME20				≤32	5.2	
							P731_0050K202_0067 ME30				≤38	10	
38.98	1520/39	440	741	741	1170	4.0/2.0	P731_0070K102_0056 ME10	3300	2800	5000	≤19	1.3	52
							P731_0070K102_0056 ME20				≤24	3.2	
40.00	40/1	350	575	575	1150	3.5/1.5	P731_0100K102_0040 ME10	3300	2800	5000	≤19	1.5	50
							P731_0100K102_0040 ME20				≤24	3.4	
41.99	12,470/297	440	805	840	1260	4.0/2.0	P731_0050K202_0084 ME10	3500	3100	5000	≤19	1.4	53
					1610		P731_0050K202_0084 ME20				≤32	4.8	
							P731_0050K202_0084 ME30				≤38	10	
42.00	42/1	440	760	760	1260	4.0/2.0	P731_0070K102_0060 ME10	3300	2800	5000	≤19	1.1	52
							P731_0070K102_0060 ME20				≤24	3.0	
45.95	11,395/248	440	805	840	1379	4.0/2.0	P731_0050K202_0092 ME10	3500	3100	5000	≤19	1.6	53
					1610		P731_0050K202_0092 ME20				≤32	5.0	
							P731_0050K202_0092 ME30				≤38	10	
46.51	2093/45	440	786	786	1396	4.0/2.0	P731_0070K102_0066 ME10	3600	3300	5500	≤19	1.1	52
							P731_0070K102_0066 ME20				≤24	3.0	
55.68	15,200/273	350	575	575	1150	3.5/1.5	P731_0100K102_0056 ME10	3300	2800	5000	≤19	1.3	50
							P731_0100K102_0056 ME20				≤24	3.2	

[1] *Based on input speed of 1500 RPM. See page 186 for details on torque calculations.*
[2] *Maximum momentary torque for emergency stops or heavy shock load. (Admissible stops per life of gearhead = 1,000 stops maximum.)*
* *MF = Motor adapter with FlexiAdapt® coupling*

Selection Data

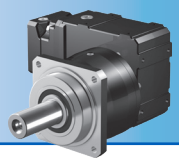

Reducer Ratio (i)		Output Torque				Back-lash/ Red $\Delta\phi_2$	Part Number* (Gearhead + Input)	Max. Input Speed RPM (n1)			Motor Shaft [3] Max Ø d_{MW}	Input Inertia J_1	Tors. Stiffness C_2
		Nom. [1] M_{2N}	Accel. M_{2acc}	Accel. Torque for Reduced Backlash M_{2accHT}	Peak [2] M_{2NOT}			Continuous		Cyclic			
Nom.	Exact	Nm	Nm	Nm	Nm	arcmin		EL 1,2	EL 3,4,5,6	All	mm	kgcm²	Nm/ arcmin
P7K		**(continued next page)**											
57.73	6235/108	440	805	840	1610	4.0/2.0	P731_0050K202_0115 ME10	3500	3100	5000	≤19	1.3	53
							P731_0050K202_0115 ME20				≤32	4.7	
							P731_0050K202_0115 ME30				≤38	10	
58.16	13,377/230	440	805	840	1561	4.0/2.0	P731_0070K102_0083 ME10	3600	3300	5500	≤19	0.94	52
							P731_0070K102_0083 ME20				≤24	2.8	
60.00	60/1	350	575	575	1150	3.5/1.5	P731_0100K102_0060 ME10	3300	2800	5000	≤19	1.1	50
							P731_0100K102_0060 ME20				≤24	3.0	
64.74	1748/27	440	805	840	1561	4.0/2.0	P731_0070K102_0092 ME10	3600	3300	5500	≤19	0.97	52
							P731_0070K102_0092 ME20				≤24	2.9	
66.44	598/9	350	575	575	1150	3.5/1.5	P731_0100K102_0066 ME10	3600	3300	5500	≤19	1.0	50
							P731_0100K102_0066 ME20				≤24	2.9	
69.26	14,405/208	440	805	840	1610	4.0/2.0	P731_0050K202_0140 ME10	3900	3500	5500	≤19	1.1	53
							P731_0050K202_0140 ME20	3700			≤32	4.5	
							P731_0050K202_0140 ME30	3500		5000	≤38	9.9	
70.98	3549/50	440	805	840	1561	4.0/2.0	P731_0070K102_0100 ME10	4000	3800	6000	≤19	0.86	52
							P731_0070K102_0100 ME20	3700	3700		≤24	2.8	
80.96	1862/23	440	805	840	1561	4.0/2.0	P731_0070K102_0115 ME10	3600	3300	5500	≤19	0.88	52
							P731_0070K102_0115 ME20				≤24	2.8	
83.09	1911/23	350	575	575	1150	3.5/1.5	P731_0100K102_0083 ME10	3600	3300	5500	≤19	0.93	50
							P731_0100K102_0083 ME20				≤24	2.8	
87.35	2795/32	440	805	840	1610	4.0/2.0	P731_0050K202_0175 ME10	3900	3500	5500	≤19	1.0	53
							P731_0050K202_0175 ME20	3700			≤32	4.4	
							P731_0050K202_0175 ME30	3500		5000	≤38	9.7	
88.33	3003/34	440	805	840	1561	4.0/2.0	P731_0070K102_0125 ME10	4000	3800	6000	≤19	0.79	52
							P731_0070K102_0125 ME20	3700	3700		≤24	2.7	
92.49	17,480/189	350	575	575	1150	3.5/1.5	P731_0100K102_0092 ME10	3600	3300	5500	≤19	0.96	50
							P731_0100K102_0092 ME20				≤24	2.9	
98.80	494/5	440	805	840	1561	4.0/2.0	P731_0070K102_0140 ME10	4000	3800	6000	≤19	0.82	52
							P731_0070K102_0140 ME20	3700	3700		≤24	2.7	
115.7	2660/23	350	575	575	1150	3.5/1.5	P731_0100K102_0115 ME10	3600	3300	5500	≤19	0.87	50
							P731_0100K102_0115 ME20				≤24	2.8	
115.9	14,835/128	440	805	840	1610	4.0/2.0	P731_0050K202_0230 ME10	4000	3900	6500	≤19	0.87	53
							P731_0050K202_0230 ME20	3700	3700	6000	≤32	4.3	
							P731_0050K202_0230 ME30	3500	3500	5000	≤38	9.6	

[1] Based on input speed of 1500 RPM. See page 186 for details on torque calculations.
[2] Maximum momentary torque for emergency stops or heavy shock load. (Admissible stops per life of gearhead = 1,000 stops maximum.)
** MF = Motor adapter with FlexiAdapt® coupling*

Reducer Ratio (i)		Output Torque				Back-lash/ Red $\Delta\phi_2$	Part Number* (Gearhead + Input)	Max. Input Speed RPM (n1)			Motor Shaft [3] Max Ø d_{MW}	Input Inertia J_1	Tors. Stiffness C_2
		Nom. [1] M_{2N}	Accel. M_{2acc}	Accel. Torque for Reduced Backlash M_{2accHT}	Peak [2] M_{2NOT}			Continuous		Cyclic			
Nom.	Exact	Nm	Nm	Nm	Nm	arcmin		EL 1,2	EL 3,4,5,6	All	mm	kgcm²	Nm/ arcmin
P7K		**(continued from previous page)**											
117.0	117/1	440	805	840	1561	4.0/2.0	P731_0070K102_0165 ME10	4000	4000	7000	≤19	0.73	52
							P731_0070K102_0165 ME20	3700	3700	6000	≤24	2.6	
122.9	2090/17	440	805	840	1561	4.0/2.0	P731_0070K102_0175 ME10	4000	3800	6000	≤19	0.77	52
							P731_0070K102_0175 ME20	3700	3700		≤24	2.7	
139.8	559/4	440	805	840	1610	4.0/2.0	P731_0050K202_0280 ME10	4000	3900	6500	≤19	0.81	53
							P731_0050K202_0280 ME20	3700	3700	6000	≤24	2.7	
141.1	2821/20	440	805	840	1561	4.0/2.0	P731_0070K102_0200 ME10	4000	4000	7000	≤19	0.71	52
							P731_0070K102_0200 ME20	3700	3700	6000	≤24	2.6	
162.9	1140/7	440	805	840	1561	4.0/2.0	P731_0070K102_0230 ME10	4000	4000	7000	≤19	0.72	52
							P731_0070K102_0230 ME20	3700	3700	6000	≤24	2.6	
172.8	9675/56	440	805	840	1610	4.0/2.0	P731_0050K202_0350 ME10	4000	3900	6500	≤19	0.76	53
							P731_0050K202_0350 ME20	3700	3700	6000	≤24	2.7	
176.5	8827/50	440	783	783	1386	4.0/2.0	P731_0070K102_0250 ME10	4000	4000	7000	≤19	0.68	52
							P731_0070K102_0250 ME20	3700	3700	6000	≤24	2.6	
196.3	589/3	440	805	840	1561	4.0/2.0	P731_0070K102_0280 ME10	4000	4000	7000	≤19	0.70	52
							P731_0070K102_0280 ME20	3700	3700	6000	≤24	2.6	
231.1	1849/8	440	805	840	1610	4.0/2.0	P731_0050K202_0460 ME10	4000	3900	6500	≤19	0.71	53
							P731_0050K202_0460 ME20	3700	3700	6000	≤24	2.6	
232.7	11,400/49	350	575	575	1150	3.5/1.5	P731_0100K102_0230 ME10	4000	4000	7000	≤19	0.72	50
							P731_0100K102_0230 ME20	3700	3700	6000	≤24	2.6	
235.9	4719/20	440	595	595	1053	4.0/2.0	P731_0070K102_0340 ME10	4000	4000	7000	≤19	0.63	52
245.7	3686/15	440	805	840	1561	4.0/2.0	P731_0070K102_0350 ME10	4000	4000	7000	≤19	0.68	52
							P731_0070K102_0350 ME20	3700	3700	6000	≤24	2.6	
277.7	6665/24	440	805	840	1392	4.0/2.0	P731_0050K202_0560 ME10	4000	3900	6500	≤19	0.66	53
280.5	5890/21	350	575	575	1150	3.5/1.5	P731_0100K102_0280 ME10	4000	4000	7000	≤19	0.70	50
							P731_0100K102_0280 ME20	3700	3700	6000	≤24	2.6	
282.1	2821/10	417	501	501	887	4.0/2.0	P731_0070K102_0400 ME10	4000	4000	7000	≤19	0.62	52
328.4	2299/7	440	805	828	1466	4.0/2.0	P731_0070K102_0470 ME10	4000	4000	7000	≤19	0.63	52
351.1	7372/21	350	575	575	1150	3.5/1.5	P731_0100K102_0350 ME10	4000	4000	7000	≤19	0.68	50
							P731_0100K102_0350 ME20	3700	3700	6000	≤24	2.6	
352.2	35,217/100	339	407	407	721	4.0/2.0	P731_0070K102_0500 ME10	4000	4000	7000	≤19	0.62	52
392.7	1178/3	440	697	697	1235	4.0/2.0	P731_0070K102_0560 ME10	4000	4000	7000	≤19	0.62	52
469.2	22,990/49	350	575	575	1150	3.5/1.5	P731_0100K102_0470 ME10	4000	4000	7000	≤19	0.63	50
490.2	2451/5	440	566	566	1003	4.0/2.0	P731_0070K102_0700 ME10	4000	4000	7000	≤19	0.62	52
561.0	11,780/21	350	575	575	1150	3.5/1.5	P731_0100K102_0560 ME10	4000	4000	7000	≤19	0.62	50

[1] *Based on input speed of 1500 RPM. See page 186 for details on torque calculations.*
[2] *Maximum momentary torque for emergency stops or heavy shock load. (Admissible stops per life of gearhead = 1,000 stops maximum.)*
* *MF = Motor adapter with FlexiAdapt® coupling*

Selection Data

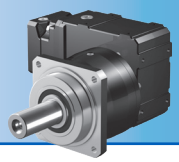

Reducer Ratio (i)		Output Torque				Back-lash/ Red $\Delta\phi_2$	Part Number* (Gearhead + Input)	Max. Input Speed RPM (n1)			Motor Shaft [3] Max Ø d_{MW}	Input Inertia J_1	Tors. Stiffness C_2
		Nom. [1] M_{2N}	Accel. M_{2acc}	Accel. Torque for Reduced Backlash M_{2accHT}	Peak [2] M_{2NOT}			Continuous		Cyclic			
Nom.	Exact	Nm	Nm	Nm	Nm	arcmin		EL 1,2	EL 3,4,5,6	All	mm	kgcm²	Nm/ arcmin
P8K		**(continued next page)**											
12.00	12/1	593	677	677	900	4.5/2.5	P831_0030K302_0040 ME20	2700	2300	4000	≤32	12	81
			889	889	2165		P831_0030K302_0040 ME30				≤38	17	83
16.00	16/1	790	903	903	1200	4.0/2.0	P831_0040K302_0040 ME20	2700	2300	4000	≤32	10	108
			1186	1186	2887		P831_0040K302_0040 ME30				≤38	16	109
20.00	20/1	988	1129	1129	1500	4.0/2.0	P831_0050K302_0040 ME20	2700	2300	4000	≤32	9.7	126
			1482	1482	3230		P831_0050K302_0040 ME30				≤38	15	127
26.88	215/8	1090	1518	1518	2016	4.0/2.0	P831_0050K302_0054 ME20	2700	2300	4000	≤32	7.6	127
							P831_0050K302_0054 ME30				≤38	13	
28.00	28/1	790	1185	1185	2100	3.5/1.5	P831_0070K202_0040 ME20	3000	2600	4500	≤32	6.8	128
							P831_0070K202_0040 ME30				≤38	12	
30.00	30/1	1100	1694	1694	2250	4.0/2.0	P831_0050K302_0060 ME20	2700	2300	4000	≤32	7.8	127
			1697	1697	3230		P831_0050K302_0060 ME30				≤38	13	128
30.55	336/11	690	690	690	916	3.5/1.5	P831_0070K202_0044 ME10	3000	2600	4500	≤19	3.0	125
		813	1220	1220	2291		P831_0070K202_0044 ME20				≤32	6.4	128
							P831_0070K202_0044 ME30				≤38	12	
36.24	14,749/407	861	1291	1291	2718	3.5/1.5	P831_0070K202_0052 ME20	3000	2600	4500	≤32	5.9	128
							P831_0070K202_0052 ME30				≤38	11	
36.96	2365/64	1100	1819	1819	2772	4.0/2.0	P831_0050K302_0074 ME20	2700	2300	4000	≤32	6.9	127
							P831_0050K302_0074 ME30				≤38	12	128
40.00	40/1	850	1380	1380	2760	3.5/1.5	P831_0100K202_0040 ME20	3000	2600	4500	≤32	6.6	131
							P831_0100K202_0040 ME30				≤38	12	
42.00	42/1	904	948	948	1260	3.5/1.5	P831_0070K202_0060 ME10	3000	2600	4500	≤19	2.5	127
			1356	1356	2887		P831_0070K202_0060 ME20				≤32	5.9	128
							P831_0070K202_0060 ME30				≤38	11	
46.34	5375/116	1100	1840	1867	3230	4.0/2.0	P831_0050K302_0093 ME20	3200	2800	4500	≤32	6.1	128
							P831_0050K302_0093 ME30				≤38	11	
46.78	15,953/341	937	1057	1057	1404	3.5/1.5	P831_0070K202_0067 ME10	3500	3100	5000	≤19	1.8	127
			1406	1406	2887		P831_0070K202_0067 ME20				≤32	5.2	128
							P831_0070K202_0067 ME30				≤38	11	

[1] *Based on input speed of 1500 RPM. See page 186 for details on torque calculations.*
[2] *Maximum momentary torque for emergency stops or heavy shock load. (Admissible stops per life of gearhead = 1,000 stops maximum.)*
* *MF = Motor adapter with FlexiAdapt® coupling*

Reducer Ratio (i)		Output Torque				Back-lash/ Red $\Delta\phi_2$	Part Number* (Gearhead + Input)	Max. Input Speed RPM (n1)			Motor Shaft [3] Max Ø d_{MW}	Input Inertia J_1	Tors. Stiffness C_2
		Nom. [1] M_{2N}	Accel. M_{2acc}	Accel. Torque for Reduced Backlash M_{2accHT}	Peak [2] M_{2NOT}			Continuous		Cyclic			
Nom.	Exact	Nm	Nm	Nm	Nm	arcmin		EL 1,2	EL 3,4,5,6	All	mm	kgcm²	Nm/ arcmin
P8K		**(continued next page)**											
49.83	14,749/296	957	1436	1436	2887	3.5/1.5	P831_0070K202_0071 ME20	3000	2600	4500	≤32	5.5	128
							P831_0070K202_0071 ME30				≤38	11	
51.77	21,070/407	850	1380	1380	2760	3.5/1.5	P831_0100K202_0052 ME20	3000	2600	4500	≤32	5.8	131
							P831_0100K202_0052 ME30				≤38	11	
58.05	1161/20	1100	1311	1311	1742	4.0/2.0	P831_0050K302_0115 ME10	3200	2800	4500	≤19	2.1	127
			1840	1867	3230		P831_0050K302_0115 ME20				≤32	5.5	128
							P831_0050K302_0115 ME30				≤38	11	
58.78	17,458/297	1000	1328	1328	1763	3.5/1.5	P831_0070K202_0084 ME10	3500	3100	5000	≤19	1.5	128
			1494	1494	2887		P831_0070K202_0084 ME20				≤32	4.9	
							P831_0070K202_0084 ME30				≤38	10	
60.00	60/1	850	1355	1355	1800	3.5/1.5	P831_0100K202_0060 ME10	3000	2600	4500	≤19	2.4	131
			1380	1380	2760		P831_0100K202_0060 ME20				≤32	5.8	
							P831_0100K202_0060 ME30				≤38	11	
64.33	15,953/248	1000	1453	1453	1931	3.5/1.5	P831_0070K202_0092 ME10	3500	3100	5000	≤19	1.6	128
			1494	1494	2887		P831_0070K202_0092 ME20				≤32	5.0	
							P831_0070K202_0092 ME30				≤38	10	
66.83	22,790/341	850	1380	1380	2006	3.5/1.5	P831_0100K202_0067 ME10	3500	3100	5000	≤19	1.8	131
					2760		P831_0100K202_0067 ME20				≤32	5.2	
							P831_0100K202_0067 ME30				≤38	11	
69.68	7525/108	1100	1574	1574	2091	4.0/2.0	P831_0050K302_0140 ME10	3500	3100	5000	≤19	1.7	127
			1840	1867	3230		P831_0050K302_0140 ME20				≤32	5.1	128
							P831_0050K302_0140 ME30				≤38	10	
70.51	20,167/286	1000	1494	1494	2116	3.5/1.5	P831_0070K202_0100 ME10	3900	3500	5500	≤19	1.3	128
					2887		P831_0070K202_0100 ME20	3700			≤32	4.7	
							P831_0070K202_0100 ME30	3500		5000	≤38	10	
80.82	8729/108	1000	1494	1494	2425	3.5/1.5	P831_0070K202_0115 ME10	3500	3100	5000	≤19	1.3	128
					2887		P831_0070K202_0115 ME20				≤32	4.7	
							P831_0070K202_0115 ME30				≤38	10	

[1] *Based on input speed of 1500 RPM. See page 186 for details on torque calculations.*
[2] *Maximum momentary torque for emergency stops or heavy shock load. (Admissible stops per life of gearhead = 1,000 stops maximum.)*
* *MF = Motor adapter with FlexiAdapt® coupling*

Selection Data

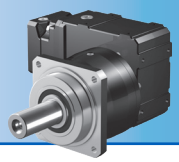

Reducer Ratio (i)		Output Torque				Back-lash/ Red $\Delta\phi_2$	Part Number* (Gearhead + Input)	Max. Input Speed RPM (n1)			Motor Shaft [3] Max Ø d_{MW}	Input Inertia J_1	Tors. Stiffness C_2
		Nom. [1] M_{2N}	Accel. M_{2acc}	Accel. Torque for Reduced Backlash M_{2accHT}	Peak [2] M_{2NOT}			Continuous		Cyclic			
Nom.	Exact	Nm	Nm	Nm	Nm	arcmin		EL 1,2	EL 3,4,5,6	All	mm	kgcm²	Nm/ arcmin
P8K		**(continued next page)**											
83.97	24,940/297	850	1380	1380	2520	3.5/1.5	P831_0100K202_0084 ME10	3500	3100	5000	≤19	1.4	131
					2760		P831_0100K202_0084 ME20				≤32	4.8	
							P831_0100K202_0084 ME30				≤38	10	
86.47	7955/92	1100	1840	1867	2594	4.0/2.0	P831_0050K302_0175 ME10	3500	3100	5000	≤19	1.4	128
					3230		P831_0050K302_0175 ME20				≤32	4.8	
							P831_0050K302_0175 ME30				≤38	10	
88.94	3913/44	1000	1494	1494	2669	3.5/1.5	P831_0070K202_0125 ME10	3900	3500	5500	≤19	1.1	128
					2887		P831_0070K202_0125 ME20	3700			≤32	4.5	
							P831_0070K202_0125 ME30	3500		5000	≤38	9.8	
91.90	11,395/124	850	1380	1380	2758	3.5/1.5	P831_0100K202_0092 ME10	3500	3100	5000	≤19	1.6	131
					2760		P831_0100K202_0092 ME20				≤32	5.0	
							P831_0100K202_0092 ME30				≤38	10	
96.96	20,167/208	1000	1494	1494	2887	3.5/1.5	P831_0070K202_0140 ME10	3900	3500	5500	≤19	1.2	128
							P831_0070K202_0140 ME20	3700			≤32	4.6	
							P831_0070K202_0140 ME30	3500		5000	≤38	9.9	
115.5	6235/54	850	1380	1380	2760	3.5/1.5	P831_0100K202_0115 ME10	3500	3100	5000	≤19	1.3	131
							P831_0100K202_0115 ME20				≤32	4.7	
							P831_0100K202_0115 ME30				≤38	10	
116.5	2795/24	1100	1840	1867	3230	4.0/2.0	P831_0050K302_0230 ME10	3800	3500	6000	≤19	1.1	128
							P831_0050K302_0230 ME20	3700			≤32	4.5	
							P831_0050K302_0230 ME30	3500		5000	≤38	9.9	
118.0	20,769/176	1000	1494	1494	2887	3.5/1.5	P831_0070K202_0170 ME10	4000	3900	6500	≤19	0.91	128
							P831_0070K202_0170 ME20	3700	3700	6000	≤32	4.3	
							P831_0070K202_0170 ME30	3500	3500	5000	≤38	9.6	
122.3	3913/32	1000	1494	1494	2887	3.5/1.5	P831_0070K202_0175 ME10	3900	3500	5500	≤19	1.0	128
							P831_0070K202_0175 ME20	3700			≤32	4.4	
							P831_0070K202_0175 ME30	3500		5000	≤38	9.7	

[1] *Based on input speed of 1500 RPM. See page 186 for details on torque calculations.*
[2] *Maximum momentary torque for emergency stops or heavy shock load. (Admissible stops per life of gearhead = 1,000 stops maximum.)*
* *MF = Motor adapter with FlexiAdapt® coupling*

Reducer Ratio (i)		Output Torque				Back-lash/ Red $\Delta\phi_2$	Part Number* (Gearhead + Input)	Max. Input Speed RPM (n1)			Motor Shaft [3] Max Ø d_{MW}	Input Inertia J_1	Tors. Stiffness C_2
		Nom. [1] M_{2N}	Accel. M_{2acc}	Accel. Torque for Reduced Backlash M_{2accHT}	Peak [2] M_{2NOT}			Continuous		Cyclic			
Nom.	Exact	Nm	Nm	Nm	Nm	arcmin		EL 1,2	EL 3,4,5,6	All	mm	kgcm²	Nm/ arcmin
P8K		**(continued next page)**											
138.5	14,405/104	850	1380	1380	2760	3.5/1.5	P831_0100K202_0140 ME10	3900	3500	5500	≤19	1.1	131
							P831_0100K202_0140 ME20	3700			≤32	4.6	
							P831_0100K202_0140 ME30	3500		5000	≤38	9.9	
139.4	17,845/128	1100	1840	1867	3230	4.0/2.0	P831_0050K302_0280 ME10	3800	3500	6000	≤19	1.0	128
							P831_0050K302_0280 ME20	3700			≤32	4.4	
							P831_0050K302_0280 ME30	3500		5000	≤38	9.7	
142.3	7826/55	1000	1494	1494	2887	3.5/1.5	P831_0070K202_0200 ME10	4000	3900	6500	≤19	0.84	128
							P831_0070K202_0200 ME20	3700	3700	6000	≤24	2.7	
162.3	20,769/128	1000	1494	1494	2887	3.5/1.5	P831_0070K202_0230 ME10	4000	3900	6500	≤19	0.88	128
							P831_0070K202_0230 ME20	3700	3700	6000	≤32	4.3	
							P831_0070K202_0230 ME30	3500	3500	5000	≤38	9.6	
173.7	4515/26	1100	1840	1867	3230	4.0/2.0	P831_0050K302_0350 ME10	3800	3500	6000	≤19	0.90	128
							P831_0050K302_0350 ME20	3700			≤24	2.8	
174.7	2795/16	850	1380	1380	2760	3.5/1.5	P831_0100K202_0175 ME10	3900	3500	5500	≤19	1.0	131
							P831_0100K202_0175 ME20	3700			≤32	4.4	
							P831_0100K202_0175 ME30	3500		5000	≤38	9.7	
175.9	1935/11	1000	1494	1494	2887	3.5/1.5	P831_0070K202_0250 ME10	4000	3900	6500	≤19	0.77	128
							P831_0070K202_0250 ME20	3700	3700	6000	≤24	2.7	
195.7	3913/20	1000	1494	1494	2887	3.5/1.5	P831_0070K202_0280 ME10	4000	3900	6500	≤19	0.81	128
							P831_0070K202_0280 ME20	3700	3700	6000	≤24	2.7	
231.1	1849/8	1100	1840	1867	3230	4.0/2.0	P831_0050K302_0460 ME10	3800	3500	6000	≤19	0.79	128
							P831_0050K302_0460 ME20	3700			≤24	2.7	
231.8	14,835/64	850	1380	1380	2760	3.5/1.5	P831_0100K202_0230 ME10	4000	3900	6500	≤19	0.87	131
							P831_0100K202_0230 ME20	3700	3700	6000	≤32	4.3	
							P831_0100K202_0230 ME30	3500	3500	5000	≤38	9.6	
235.3	12,943/55	1000	1255	1255	2223	3.5/1.5	P831_0070K202_0340 ME10	4000	3900	6500	≤19	0.72	128
							P831_0070K202_0340 ME20	3700	3700	6000	≤24	2.6	

[1] *Based on input speed of 1500 RPM. See page 186 for details on torque calculations.*
[2] *Maximum momentary torque for emergency stops or heavy shock load. (Admissible stops per life of gearhead = 1,000 stops maximum.)*
* *MF = Motor adapter with FlexiAdapt® coupling*

Selection Data

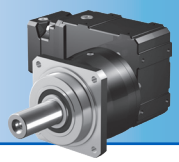

Reducer Ratio (i)		Output Torque				Back-lash/ Red $\Delta\phi_2$	Part Number* (Gearhead + Input)	Max. Input Speed RPM (n1)			Motor Shaft [3] Max Ø d_{MW}	Input Inertia J_1	Tors. Stiffness C_2
		Nom. [1] M_{2N}	Accel. M_{2acc}	Accel. Torque for Reduced Backlash M_{2accHT}	Peak [2] M_{2NOT}			Continuous		Cyclic			
Nom.	Exact	Nm	Nm	Nm	Nm	arcmin		EL 1,2	EL 3,4,5,6	All	mm	kgcm²	Nm/ arcmin
P8K		**(continued from previous page)**											
241.9	1935/8	1000	1494	1494	2887	3.5	P831_0070K202_0350 ME10	4000	3900	6500	≤19	0.76	128
							P831_0070K202_0350 ME20	3700	3700	6000	≤24	2.7	
278.5	12,255/44	1100	1541	1541	2729	4.0	P831_0050K302_0560 ME10	3800	3500	6000	≤19	0.75	128
							P831_0050K302_0560 ME20	3700			≤24	2.6	
279.5	559/2	850	1380	1380	2760	3.5	P831_0100K202_0280 ME10	4000	3900	6500	≤19	0.81	131
							P831_0100K202_0280 ME20	3700	3700	6000	≤24	2.7	
282.8	9331/33	784	941	941	1418	3.5	P831_0070K202_0400 ME10	4000	3900	6500	≤19	0.66	128
323.6	12,943/40	1000	1494	1494	2887	3.5	P831_0070K202_0460 ME10	4000	3900	6500	≤19	0.71	128
							P831_0070K202_0460 ME20	3700	3700	6000	≤24	2.6	
345.5	9675/28	850	1380	1380	2760	3.5	P831_0100K202_0350 ME10	4000	3900	6500	≤19	0.76	131
							P831_0100K202_0350 ME20	3700	3700	6000	≤24	2.7	
353.4	46,655/132	654	784	784	1329	3.5	P831_0070K202_0500 ME10	4000	3900	6500	≤19	0.64	128
388.8	9331/24	1000	1294	1294	1949	3.5	P831_0070K202_0560 ME10	4000	3900	6500	≤19	0.66	128
462.3	1849/4	850	1380	1380	2760	3.5	P831_0100K202_0460 ME10	4000	3900	6500	≤19	0.71	131
							P831_0100K202_0460 ME20	3700	3700	6000	≤24	2.6	132
486.0	46,655/96	899	1078	1078	1828	3.5	P831_0070K202_0690 ME10	4000	3900	6500	≤19	0.64	128
555.4	6665/12	850	1380	1380	2760	3.5	P831_0100K202_0560 ME10	4000	3900	6500	≤19	0.66	131

[1] *Based on input speed of 1500 RPM. See page 186 for details on torque calculations.*
[2] *Maximum momentary torque for emergency stops or heavy shock load. (Admissible stops per life of gearhead = 1,000 stops maximum.)*
* *MF = Motor adapter with FlexiAdapt® coupling*

Reducer Ratio (i)		Output Torque				Back-lash/ Red $\Delta\phi_2$	Part Number* (Gearhead + Input)	Max. Input Speed RPM (n1)			Motor Shaft [3] Max Ø d_{MW}	Input Inertia J_1	Tors. Stiffness C_2
		Nom. [1] M_{2N}	Accel. M_{2acc}	Accel. Torque for Reduced Backlash M_{2accHT}	Peak [2] M_{2NOT}			Continuous		Cyclic			
Nom.	Exact	Nm	Nm	Nm	Nm	arcmin		EL 1,2	EL 3,4,5,6	All	mm	kgcm²	Nm/ arcmin
P9K		**(continued next page)**											
28.00	28/1	2076	3105	-	5600	3.5	P931_0070K402_0040 ME30	2600	2200	3800	≤38	20	303
							P931_0070K402_0040 ME40				≤48	42	
30.55	336/11	2100	3105	-	6109	3.5	P931_0070K402_0044 ME30	2600	2200	3800	≤38	19	304
							P931_0070K402_0044 ME40				≤48	41	303
37.95	12,943/341	2100	3105	-	6210	3.5	P931_0070K402_0054 ME30	2600	2200	3800	≤38	16	304
							P931_0070K402_0054 ME40				≤48	38	
42.00	42/1	2100	3105	-	6210	3.5	P931_0070K402_0060 ME30	2600	2200	3800	≤38	17	304
							P931_0070K402_0060 ME40				≤48	39	
47.03	1505/32	2100	2656	-	3529	3.5	P931_0070K402_0067 ME20	3000	2600	4500	≤32	8.6	303
			3105		6210		P931_0070K402_0067 ME30				≤38	14	304
							P931_0070K402_0067 ME40				≤48	36	
52.19	12,943/248	2100	3105	-	6210	3.5	P931_0070K402_0075 ME30	2600	2200	3800	≤38	15	305
							P931_0070K402_0075 ME40				≤48	37	
58.64	645/11	2100	3105	-	4399	3.5	P931_0070K402_0084 ME20	3000	2600	4500	≤32	7.2	304
					6210		P931_0070K402_0084 ME30				≤38	13	305
							P931_0070K402_0084 ME40				≤48	35	
64.67	16,555/256	2100	3105	-	4852	3.5	P931_0070K402_0092 ME20	3000	2600	4500	≤32	7.8	304
					6210		P931_0070K402_0092 ME30				≤38	13	305
							P931_0070K402_0092 ME40				≤48	35	
70.69	9331/132	2100	3105	-	5302	3.5	P931_0070K402_0100 ME20	3400	3000	5000	≤32	6.4	304
					6210		P931_0070K402_0100 ME30	3400	3000	5000	≤38	12	305
							P931_0070K402_0100 ME40	3000		4500	≤48	34	
80.63	645/8	2100	3105	-	6049	3.5	P931_0070K402_0115 ME20	3000	2600	4500	≤32	6.7	305
					6210		P931_0070K402_0115 ME30				≤38	12	
							P931_0070K402_0115 ME40				≤48	34	
88.61	2924/33	2100	3105	-	6210	3.5	P931_0070K402_0125 ME20	3400	3000	5000	≤32	5.7	305
							P931_0070K402_0125 ME30				≤38	11	
							P931_0070K402_0125 ME40	3000		4500	≤48	33	

[1] *Based on input speed of 1500 RPM. See page 186 for details on torque calculations.*
[2] *Maximum momentary torque for emergency stops or heavy shock load. (Admissible stops per life of gearhead = 1,000 stops maximum.)*
* *MF = Motor adapter with FlexiAdapt® coupling*

Selection Data

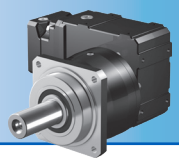

Reducer Ratio (i)		Output Torque				Back-lash/ Red $\Delta\phi_2$	Part Number* (Gearhead + Input)	Max. Input Speed RPM (n1)			Motor Shaft [3] Max Ø d_{MW}	Input Inertia J_1	Tors. Stiffness C_2
		Nom. [1] M_{2N}	Accel. M_{2acc}	Accel. Torque for Reduced Backlash M_{2accHT}	Peak [2] M_{2NOT}			Continuous		Cyclic			
Nom.	Exact	Nm	Nm	Nm	Nm	arcmin		EL 1,2	EL 3,4,5,6	All	mm	kgcm²	Nm/ arcmin
P9K		**(continued from previous page)**											
97.20	9331/96	2100	3105	-	6210	3.5	P931_0070K402_0140 ME20	3400	3000	5000	≤32	6.1	305
							P931_0070K402_0140 ME30				≤38	12	
							P931_0070K402_0140 ME40	3000		4500	≤48	33	
118.6	3913/33	2100	3105	-	6210	3.5	P931_0070K402_0170 ME20	3600	3300	5500	≤32	5.1	305
							P931_0070K402_0170 ME30	3500		5000	≤38	11	
							P931_0070K402_0170 ME40	3000	3000	4500	≤48	32	
121.8	731/6	2100	3105	-	6210	3.5	P931_0070K402_0175 ME20	3400	3000	5000	≤32	5.5	305
							P931_0070K402_0175 ME30				≤38	11	
							P931_0070K402_0175 ME40	3000		4500	≤48	33	
141.4	9331/66	2100	3105	-	6210	3.5	P931_0070K402_0200 ME20	3600	3300	5500	≤32	4.8	305
							P931_0070K402_0200 ME30	3500		5000	≤38	10	
163.0	3913/24	2100	3105	-	6210	3.5	P931_0070K402_0230 ME20	3600	3300	5500	≤32	4.9	305
							P931_0070K402_0230 ME30	3500		5000	≤38	10	
							P931_0070K402_0230 ME40	3000	3000	4500	≤48	32	
177.0	29,197/165	2100	3105	-	6210	3.5	P931_0070K402_0250 ME20	3600	3300	5500	≤32	4.6	305
							P931_0070K402_0250 ME30	3500		5000	≤38	9.9	
194.4	9331/48	2100	3105	-	6210	3.5	P931_0070K402_0280 ME20	3600	3300	5500	≤32	4.7	305
							P931_0070K402_0280 ME30	3500		5000	≤38	10	
235.7	33,712/143	2100	3105	-	5125	3.5	P931_0070K402_0340 ME20	3600	3300	5500	≤24	2.8	305
243.3	29,197/120	2100	3105	-	6210	3.5	P931_0070K402_0350 ME20	3600	3300	5500	≤32	4.5	305
							P931_0070K402_0350 ME30	3500		5000	≤38	9.8	
283.6	34,314/121	2092	2510	-	4446	3.5	P931_0070K402_0410 ME20	3600	3300	5500	≤24	2.8	305
324.2	4214/13	2100	3105	-	6210	3.5	P931_0070K402_0460 ME20	3600	3300	5500	≤24	2.8	305
353.0	38,829/110	1830	2196	-	3890	3.5	P931_0070K402_0500 ME20	3600	3300	5500	≤24	2.7	305
389.9	17157/44	2100	3105	-	6113	3.5	P931_0070K402_0560 ME20	3600	3300	5500	≤24	2.7	305
485.4	38,829/80	2100	3020	-	5349	3.5	P931_0070K402_0690 ME20	3600	3300	5500	≤24	2.7	305

[1] *Based on input speed of 1500 RPM. See page 186 for details on torque calculations.*
[2] *Maximum momentary torque for emergency stops or heavy shock load. (Admissible stops per life of gearhead = 1,000 stops maximum.)*
* *MF = Motor adapter with FlexiAdapt® coupling*

PK Series

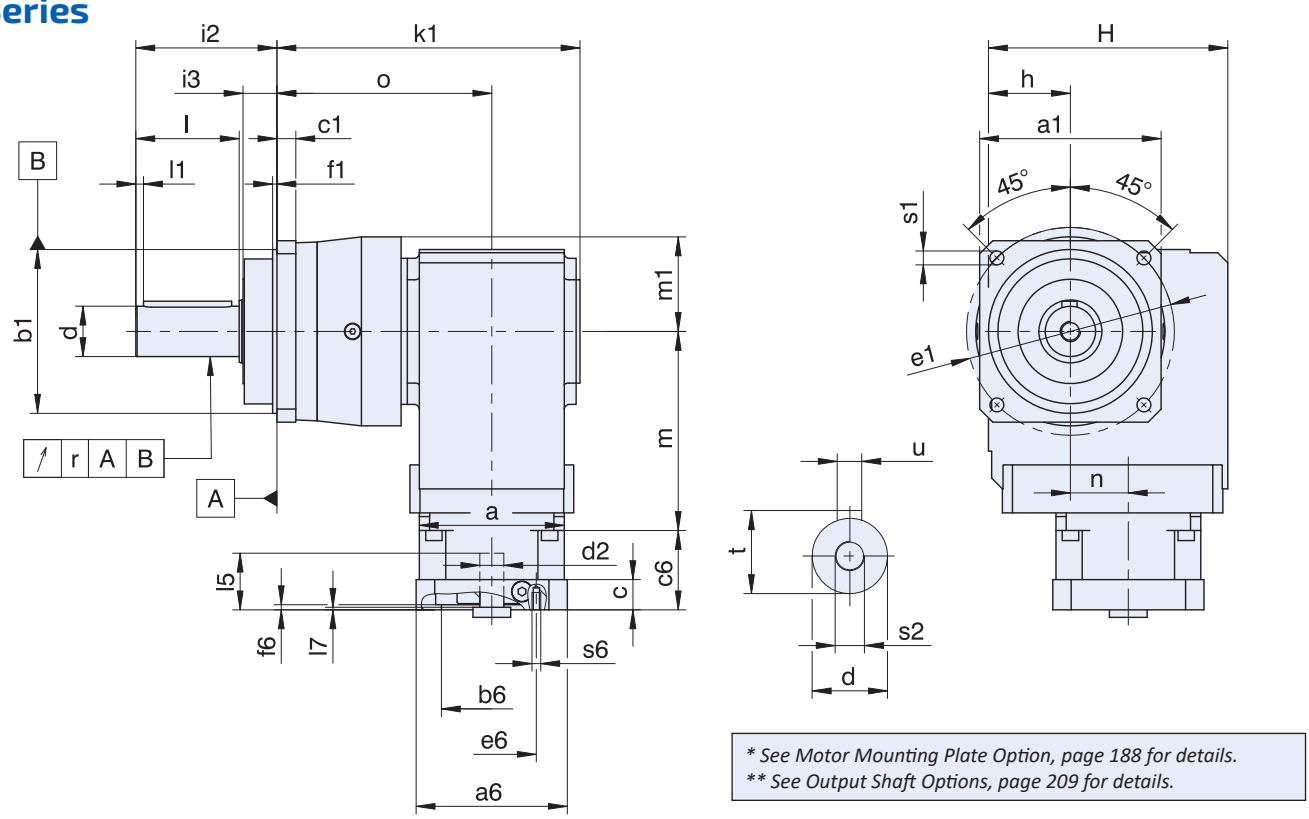

** See Motor Mounting Plate Option, page 188 for details.*
*** See Output Shaft Options, page 209 for details.*

Table 1 Dimensions (mm)

Unit	Øa1	Øb1	c1	Ød	Øe1	f1	h	H	i2	i3	k1	l	l1	m1	o	r	Øs1	s2	t	u
P531_K102	101	90^{h6}	10	32^{k6}	120	15.0	60	160	88	28	199.5	58	3	60.0	143.5	0.030	9.0	M12	35.0	A10×8×50
P731_K102	144	130^{h6}	15	40^{k6}	165	3.5	60	160	112	27	212.5	82	4	75.0	156.5	0.035	11.0	M16	43.0	A12×8×70
P731_K202	144	130^{h6}	15	40^{k6}	165	3.5	65	190	112	27	240.5	82	4	75.0	170.5	0.035	11.0	M16	43.0	A12×8×70
P831_K202	190	160^{h6}	15	55^{k6}	215	10.0	65	190	112	27	277.5	82	6	102.0	207.5	0.035	13.5	M20	59.0	A16×10×70
P831_K302	190	160^{h6}	15	55^{k6}	215	10.0	75	213	112	27	291.0	82	6	102.0	215.0	0.035	13.5	M20	59.0	A16×10×70
P931_K402	212	180^{h6}	17	75^{k6}	250	10.0	90	240	143	34	350.5	105	7	115.0	260.5	0.040	17.5	M20	79.5	A20×12×90

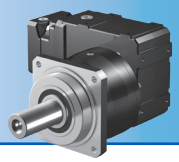

Dimensional Data

Motor Mounting Plate

Table 2 Dimensions (mm)

Base Right Angle Module	Motor Adapter Code												Wt. lbs.
	ME10			ME20			ME30			ME40			
	C	m	n	C	m	n	C	m	n	C	m	n	
P531_K102	Ø98	124	36	Ø115	128	36	—	—	—	—	—	—	31
P731_K102	Ø98	124	36	Ø115	128	36	—	—	—	—	—	—	31
P731_K202	Ø98	143	46	Ø115	147	46	Ø145	149	46	—	—	—	40
P831_K202	Ø98	143	46	Ø115	147	46	Ø145	149	46	—	—	—	40
P831_K302	Ø140	163	53	Ø115	167	53	Ø145	169	53	—	—	—	67
P931_K402	–	–	–	Ø160	187	60	Ø145	189	60	Ø190	192	60	93

Table 3 Dimensions (mm)

Motor Adapter Code	Thickness [2] c Min.	Motor Shaft d2 Max. [1]	X	Wt. lbs.
ME10	21	19	40	5
ME20	24	32	50	8
ME30	25	38	60	12
ME40	33	48	88	18

1) If an adapter bushing is required it will be supplied as a component of the motor mounting plate.

2) Motor plate maximum thickness (L9) will vary with motor shaft length but will not be less than shown.

PHKX Series: RIGHT ANGLE – Flange Output

PHKX Features

- 4:1 to 300:1 ratios (higher ratios available. Contact STOBER.)
- Quiet running (<64dB(A))
- High load capacity and tilting rigidity through symmetrical bearing arrangement
- FKM seals for extended gearbox life
- Large motor input option to accept bigger diameter motor shafts so you don't use an oversized gearbox
- Error free motor mounting and quick changeover with toleranced pilot on motor plate
- Low no load running torque, giving you more torque for your application
- Magnetic oil filtration to remove contaminants to prevent breakdowns
- Build and ship in one day
- Assembled in the USA

STOBER PHKX provides a right angle option with planetary gearing. Every gearbox is made to order. STOBER will custom whatever you need to fit your application. Contact us today to learn more.

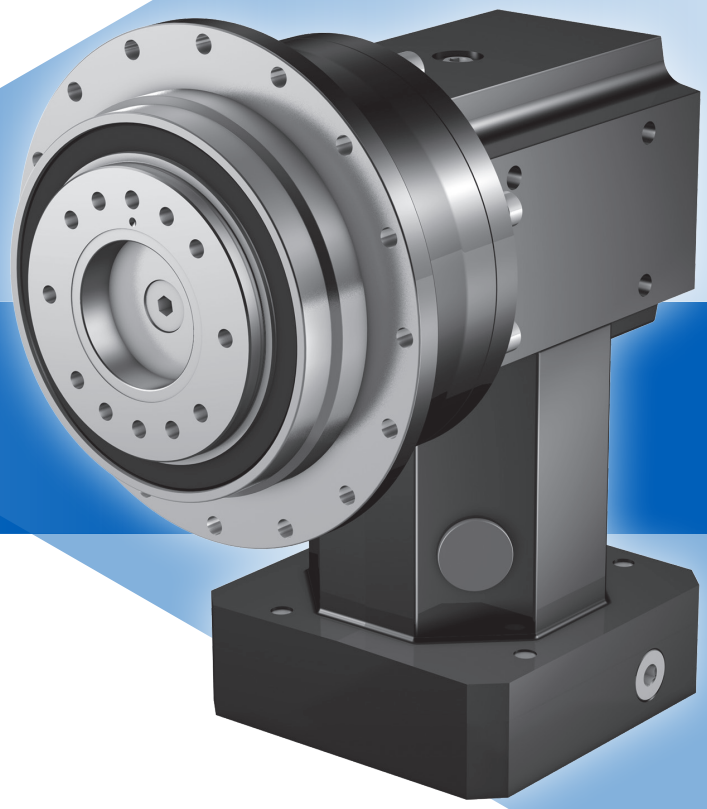

SHIPS in 1 DAY!
NO EXPEDITE FEE FOR 24 HOUR SERVICE

General Specifications

Ambient Temperature	0°C to +40°C (104°F) [Unit temperature <90°C Max]
Backlash	≤3.5 (see performance overview chart on page 206
Coating	Standard Black (RAL-9005)
Degree of Protection	IP65
Direction of Rotation	See page 207
Efficiency	PHKX: 1 stage 96%, 2 stage 94%
Input RPM	Up to 6,000 RPM
Installation	Requires 12.9 fasteners. See page 288, for more information
Lubrication	Lubricated for life – standard Mobil SHC629; option food grade Mobil SHC CIBUS 150
Mounting Position	Must be specified, see page 207
Warranty	5 Year Limited (2 Years on normal wear items: bearings, seals, etc.)



Overview

Selection Options *At-a-Glance*

Using the **Selection Data** table later in this section, select the PHKX Series Gearhead with the appropriate performance and design options tailored to your motor choice and exact application requirements. Use the part number guide below as a reference to build a part number for the complete gearhead assembly.

Part Number Examples:

	1	2	3	4	5	6	7	8	9	0	!	@	
PHKX	PH	3	3	1	S	F	S	S	0040	KX301VF	0010	MF	EL1 *

	Design Option	Part Number Code	Description
1	**Series**	PH	Rotating flange output planetary
2	**Size**	3 4 5 7 8 9 10	7 sizes of gearhead
3	**Generation**	3 4	sizes 3-8 sizes 9 and 10
4	**# of Stages**	1 2	One stage for ratios of ≤ 10:1 Two stage for ratios >30:1
5	**Housing**	S	Standard mounting style
6	**Output Shaft**	F	Flange output
7	**Bearing**	S V	Standard Reinforced Bearing (Sizes 3-5)
8	**Backlash**	S R	Standard Backlash Reduced Backlash (PH3-9)
9	**Ratio**	0040	Ratios range from 4:1 to 100:1 (0040=4:1; 0055=5.5:1; 1000=100:1, ect.)
0	**Secondary Unit**	KX301VF	KX Series right angle unit: 5 sizes, 1 stage, without output shaft (V) and with flange (F)
!	**Secondary Unit Ratio**	0010	Ratios from 1:1 to 3:1 (0010=1:1; 0020=2:1; 0030=3:1)
@	**Motor Adapter**	MF	Motor Adapter with FlexiAdapt coupling
*	**Mounting Position**	EL1 EL2 EL3 EL4 EL5 EL6	Required special instruction for all units, see page 207

Options

Coating Options

- Available with multi-layer, industrial 316 stainless steel epoxy coating. Contact factory for this option.

ATEX

- ATmosphere EXplosible – rated for explosive environments. Contact factory for this option and allow additional time for delivery.

PHKX Performance Overview

PH Series performance is dependent on several factors including duty cycle, bearing design, gearhead size and stage configuration, among others. Use the chart below for preliminary evaluation, then use the following performance chart and selection information on the following pages for specific performance sizing and selection.

Size/Generation/# of Stages		PH331	PH332	PH431	PH432	PH531	PH532	PH731	PH732	PH831	PH832	PH942	PH1042
Secondary Unit		KX3	KX3	KX4	KX3	KX5	KX4	KX7	KX5	KX7	KX7	KX7	KX7
Acceleration Torque M_{2BMAX}	Nm	75	80	160		370	385	840	866	1200	2100	4883	4883
Output Torque Nom. [1] M_{2N}	Nm	53		110		296		600		1557		3500	
Torsional Stiffness C_2	Nm/arcmin	8.4	13	19	30	46	78	122	176	253	489	1035	1545
Torsional Backlash [2]	Δϕ	≤5	≤4	≤4	≤3	≤4	≤3	≤4	≤3	≤4	≤3	≤3	≤3
	Δϕ Reduced	≤3	≤2	≤2	≤1	≤2	≤1	≤2	≤1	≤2	≤1	≤1	-
	arcmin												
Input Speed Max. n_{1MAX}	Continuous	3500		3000	3500	3000		2100	3000	2100	2100	2100	2100
	Cyclic	6000		5500	6000	5000		4000	5000	4000	4500	4000	4000
Efficiency (@nom torque)	%	95	92	95	92	95	92	95	92	95	92	92	92
Weight	kg	3.5	4.0	7.9	6.5	13.5	11.8	25.5	21.8	43.9	49.4	77	93
	lbs	7.7	8.8	17.4	14.3	29.7	26	56.1	48	96.6	108.7	170	250
Noise [3]	dB(A)	≤64		≤66	≤64	≤68	≤66	≤70	≤68	≤70		≤70	≤70
Performance by Bearing Design Option [4]													
Permitted Axial Force F_{2ax100}	N	1650		2150		4150		6150		10,050		33,000	50,000
Permitted Tilting Torque M_{2K100}	Nm	101		257		440		1466		3486		7500	8800
Performance by Reinforced Bearing Design Option													
Permitted Axial Force F_{2ax100}	N	2200		2900		5000		—		—		—	—
Permitted Tilting Torque ≤100RPM M_{2K100}	Nm	150		354		572		—		—		—	—

[1] *Ratings based on input speed (n_1) of 1500 RPM.*

For torque at higher input speeds (M_{2NX}) solve the formula:
where n_1 = Actual Input Speed.

$$M_{2NX} = \frac{M_{2N}}{\sqrt[3]{\frac{n_1}{1500}}}$$

[2] *Tested at 1.5% of nominal torque and recorded on the output side of the gearhead. For lower backlash, contact STOBER technical support.*

[3] *Measurement at one (1) meter distance with input speed (n_1) of 1500 RPM.*

[4] *Rating based on output speed (n_2) of 100 RPM. For values at other speeds see page 209.*



Overview

PHKX Series Direction of Rotation

CW

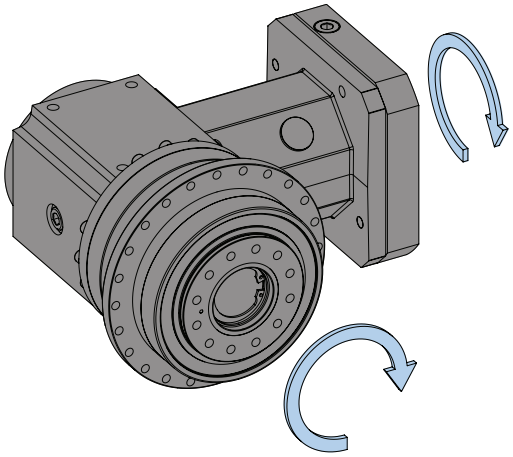

1 Stage Units (PH7 thru PH10)
2 Stage Units (PH7 thru PH10)

CCW

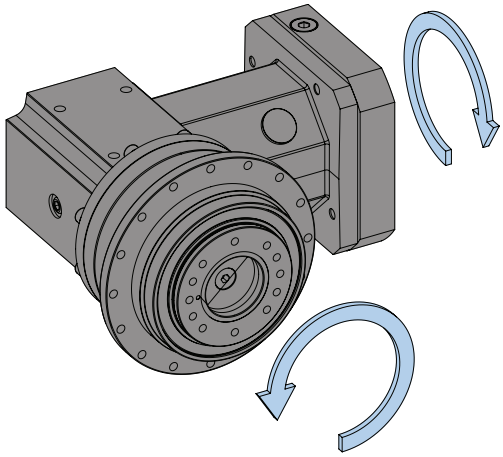

1 Stage Units (PH3 thru PH5)
2 Stage Units (PH3 thru PH5)

PHKX Mounting Position Options

Horizontal Positions (EL1, EL2, EL5, EL6) are interchangeable;

Vertical Positions (EL3 and EL4) MUST BE SPECIFIED

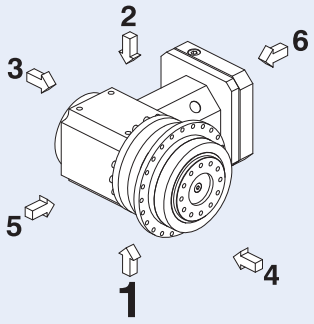

EL1

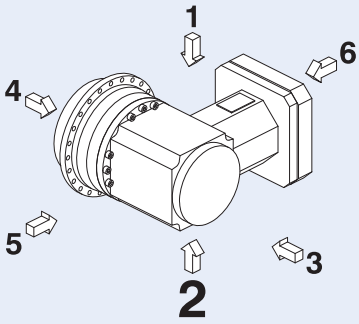

EL2

IMPORTANT: Mounting PHKX in either vertical mounting position (EL3 or EL4) must be specified when ordering.

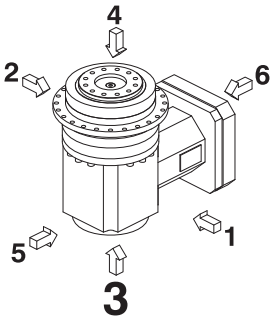

EL3

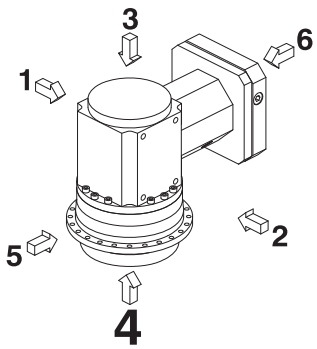

EL4

IMPORTANT: Mounting PHKX in either vertical mounting position (EL3 or EL4) must be specified when ordering.

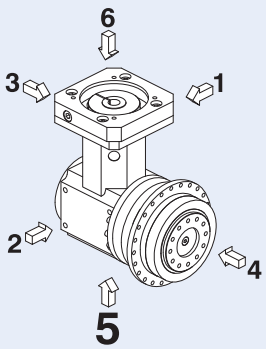

EL5

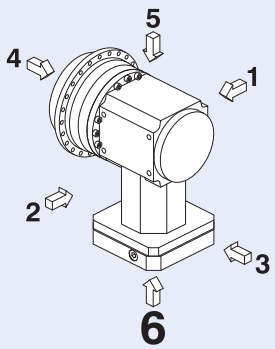

EL6

PHKX Series Motor Mounting Plate Option

STOBER Servo Gearheads fit the motor of your choice with the appropriate motor mounting plate assembled between the motor and the gearhead.

NOTE: When ordering a gearhead:

- Specify the motor manufacturer and part number
- Provide the motor drawing with dimensions, or specify the motor mounting dimensions (per the list shown at right)

For a precise dimension on a specific motor, or for general assistance, we recommend you contact STOBER Technical Support.

Customer Required Dimensions for Properly Sized Motor Mounting Plate

Motor information required with Motor Adapter (MF option for PHKX)

d2	Motor Shaft Diameter (If an adapter bushing is required it will be supplied with the motor plate.)
b6	Pilot Diameter
e6	Bolt Circle Diameter
s6	Bolt Diameter
l5	Motor Shaft Length
f6	Pilot Length
a6	Square Flange (Optional – motor plate will typically be made to match this dimension.)

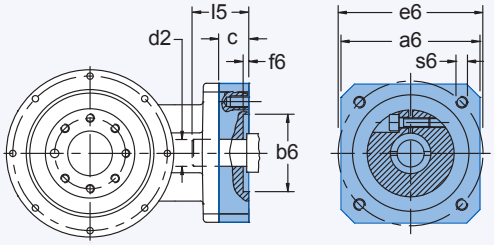

PHKX Motor Mounting Plate Dimensions — mm (Gearhead Part Number Specific)	PH331KX3 PH332KX3 PH432KX3	PH431KX4 PH532KX4	PH531KX5 PH732KX5	PH731KX7 PH831KX7 PH832KX7 PH942KX7 PH1042KX7
Maximum Allowed Motor Shaft Dia. d2	19	24	32	38
Minimum Allowed Motor Plate Thickness c*	18	21	24	25

** Note that the c motor plate thickness is determined by the motor shaft length. The minimum motor plate thickness is the value listed.*

PHKX Series Motor Mounting Plate Access Hole

Access to the clamping screw for the motor coupling is located on the 270° side of the motor mounting plate at the location shown. If necessary, the motor mounting plate can be rotated in the field, if a 0°, 90° or 180° orientation for the access hole is desirable.

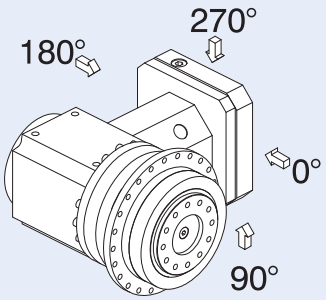

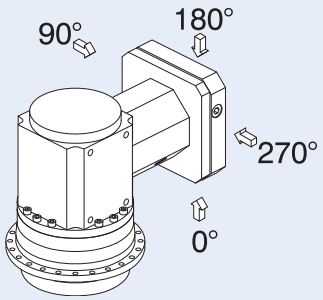

PHKX Series Permissible Motor Tilting Torque

The permissible tilting torque of the motor attached to the gear unit is a result of the static and dynamic load "F" from the motor weight, mass acceleration, and vibration multiplied by the distance from the center of gravity "l_s" of the motor.

M_{1K}	PHKX (MF Motor Adapters)			
	PHKX3	PHKX4	PHKX5	PHKX7
Nm	12	24	50	100

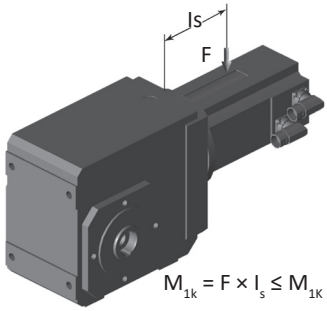



Overview

PHKX Series Permissible Output Shaft Load and Tilting Moments – Standard Bearings

Size	Z_2 Distance of Shaft Shoulder to Center of Output Bearing mm	F_{2ax100} Permitted Axial Force N	$F_{2rad100}$ Permitted Radial Force ≤100RPM N	$F_{2rad,acc}$ Radial Acceleration Force N	M_{2K100} Permitted Tilting Torque ≤100RPM Nm	$M_{2K,acc}$ Permitted Acceleration Tilting Torque Nm	C_{2K} Tilting Stiffness Nm/arcmin
3	62.5	1650	1613	1613	101	101	75
4	83.0	2150	3095	3571	257	296	192
5	97.0	4150	4536	4897	440	475	429
7	86.0	6150	17,045	17,045	1466	1466	500
8	125.5	10,050	27,778	27,778	3486	3486	1550
9	155.0	33,000	48,387	70,968	7500	11,000	7500
10	171.0	50,000	51,462	73,099	8800	12,500	9500

PHKX Series Permissible Output Shaft Load and Tilting Moments – Reinforced Bearings

Size	Z_2 Distance of Shaft Shoulder to Center of Output Bearing mm	F_{2ax100} Permitted Axial Force N	$F_{2rad100}$ Permitted Radial Force ≤100RPM N	$F_{2rad,acc}$ Radial Acceleration Force N	M_{2K100} Permitted Tilting Torque ≤100RPM Nm	$M_{2K,acc}$ Permitted Acceleration Tilting Torque Nm	C_{2K} Tilting Stiffness Nm/arcmin
3	66.5	2200	2250	2250	150	150	80
4	88.5	2900	4000	4000	354	354	217
5	104.0	5000	5500	5500	572	572	478

PHKX Series Load/Life/Speed Calculations

The permissible load and tilting moment values are based on an output speed of 100 RPM. For higher speeds the following applies, where n_2 is the desired speed:

$$F_{2radN} = \frac{F_{2rad100}}{\sqrt[3]{\frac{n_{2m*}}{100rpm}}} \qquad F_{2AX} = \frac{F_{2ax100}}{\sqrt[3]{\frac{n_2}{100}}} \qquad M_{2KX} = \frac{M_{2K100}}{\sqrt[3]{\frac{n_2}{100}}}$$

The application output tilting moment should be determined by the following formula:

$$M_{2k,acc*} = \frac{2 \bullet F_{2ax100*} \bullet y_2 + F_{2rad,acc*} \bullet (x_2 + Z_2)}{1000} \leq M_{2k,acc}$$

$$M_{2k,eq*} = \sqrt[3]{\frac{n_{2b1} \bullet t_{b1} \bullet M_{2kb1}{}^3 + \ldots + n_{2bn} \bullet t_{bn} \bullet M_{2kbn}{}^3}{n_{2b1} \bullet t_{b1} + \ldots + n_{2bn} \bullet t_{bn}}} \leq M_{2kN}$$

$$F_{2rad,eq*} = \sqrt[3]{\frac{n_{2b1} \bullet t_{b1} \bullet F_{2rb1}{}^3 + \ldots + n_{2bn} \bullet t_{bn} \bullet F_{2rbn}{}^3}{n_{2b1} \bullet t_{b1} + \ldots + n_{2bn} \bullet t_{bn}}} \leq F_{2radN}$$

Where:

Z_2	Distance of Shaft Shoulder to Center of Output Bearing
n_2	Actual Average Output Speed
X_2	Distance of the Shaft Shoulder to the Force Application Point
Y_2	Distance of the Shaft Axis to the Axial Force Application Point
F_{2ax*}	Actual Axial Force at Gear Unit Output
F_{2ax100}	Permitted Axial Force
$F_{2rad100}$	Permitted Radial Force ≤100RPM
$F_{2rad,acc}$	Radial Acceleration Force
$F_{2rad,acc*}$	Radial Acceleration Force at Gear Unit Output
M_{2K100}	Permitted Tilting Torque ≤100RPM
$M_{2K,acc}$	Permitted Acceleration Tilting Torque
$M_{2k,acc*}$	Permitted Acceleration Tilting Torque at Gear Unit Output
C_{2K}	Tilting Stiffness

All formulas shown are based on METRIC values

Upper case letters are permissible values. Lower case letters are for existing values.

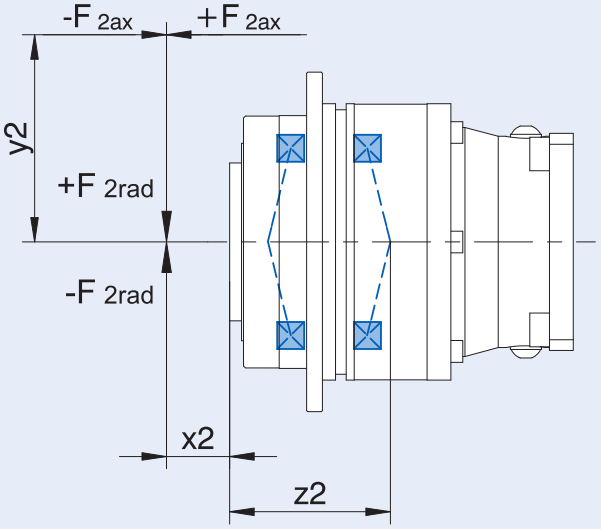

The hours of life (L_h) of the unit can be determined by the following formula:

bearing life for duty cycle ≤ 40%

L_h > 10,000 hours if M_{2K100}/M_{2A*} < 1.25 and > 1
L_h > 20,000 hours if M_{2K100}/M_{2A*} > 1.25 and > 1.5
L_h > 30,000 hours if M_{2K100}/M_{2A*} < 1.5

bearing life for duty cycle ≥ 40%

$$L_{hA} = L_h \left(\frac{40\%}{\text{Duty Cycle}}\right)$$

Exact Ratio (i)	Output Torque: Nom. M_{2N} [1]	Output Torque: Accel. M_{2acc}	Output Torque: Accel. Torque for Reduced Backlash M_{2accHT}	Output Torque: Peak M_{2NOT} [2]	Back-lash $\Delta\phi_2$	Red. Back-lash $\Delta\phi_{2red}$	Part Number* (Gearhead + Input)	Max. Input Speed RPM (n1): Continuous EL 1,2,5,6	Max. Input Speed RPM (n1): Continuous EL 3,4	Max. Input Speed RPM (n1): Cyclic	Motor Shaft [3] Max Ø d_{MW}	Input Inertia J_1	Tors. Stiffness C_2	Oper. Noise L_{pA}
	Nm	Nm	Nm	Nm	arcmin	arcmin				All	mm	kgcm²	Nm/ arcmin	dB(A)
PH3KX														
5.000	45	62	62	115	6.0	4.0	PH331_0050KX301_0010 MF	3000	2500	4500	≤19	1.1	6.9	70
7.000	45	75	77	150	5.5	3.5	PH331_0070KX301_0010 MF	3000	2500	4500	≤19	1.0	8.4	70
10.00	45	62	62	130	6.0	4.0	PH331_0050KX301_0020 MF	3500	3000	5500	≤19	0.82	6.9	66
14.00	45	75	77	150	5.5	3.5	PH331_0070KX301_0020 MF	3500	3000	5500	≤19	0.81	8.4	66
15.00	45	62	62	130	6.0	4.0	PH331_0050KX301_0030 MF	3500	3500	6000	≤19	0.75	6.9	64
20.00	36	60	60	120	5.0	3.0	PH331_0100KX301_0020 MF	3500	3000	5500	≤19	0.81	7.8	66
21.00	45	75	77	150	5.5	3.5	PH331_0070KX301_0030 MF	3500	3500	6000	≤19	0.75	8.4	64
30.00	36	60	60	120	5.0	3.0	PH331_0100KX301_0030 MF	3500	3500	6000	≤19	0.75	7.8	64
35.00	50	80	85	160	4.5	2.5	PH332_0350KX301_0010 MF	3000	2500	4500	≤19	1.0	13	70
40.00	45	80	85	160	4.5	2.5	PH332_0200KX301_0020 MF	3500	3000	5500	≤19	0.81	13	66
50.00	50	80	85	160	4.5	2.5	PH332_0250KX301_0020 MF	3500	3000	5500	≤19	0.81	13	66
56.00	50	75	75	150	4.5	2.5	PH332_0280KX301_0020 MF	3500	3000	5500	≤19	0.81	12	66
60.00	45	80	85	160	4.5	2.5	PH332_0200KX301_0030 MF	3500	3500	6000	≤19	0.75	13	64
70.00	50	80	85	160	4.5	2.5	PH332_0350KX301_0020 MF	3500	3000	5500	≤19	0.81	13	66
75.00	50	80	85	160	4.5	2.5	PH332_0250KX301_0030 MF	3500	3500	6000	≤19	0.75	13	64
80.00	50	67	67	134	4.5	2.5	PH332_0400KX301_0020 MF	3500	3000	5500	≤19	0.81	8.9	66
84.00	50	75	75	150	4.5	2.5	PH332_0280KX301_0030 MF	3500	3500	6000	≤19	0.75	12	64
100.0	50	75	75	150	4.0	2.0	PH332_0500KX301_0020 MF	3500	3000	5500	≤19	0.81	12	66
105.0	50	80	85	160	4.5	2.5	PH332_0350KX301_0030 MF	3500	3500	6000	≤19	0.75	13	64
120.0	50	67	67	134	4.5	2.5	PH332_0400KX301_0030 MF	3500	3500	6000	≤19	0.75	8.9	64
140.0	53	69	69	138	4.0	2.0	PH332_0700KX301_0020 MF	3500	3000	5500	≤19	0.80	11	66
150.0	50	75	75	150	4.0	2.0	PH332_0500KX301_0030 MF	3500	3500	6000	≤19	0.75	12	64
200.0	46	60	60	120	4.0	2.0	PH332_1000KX301_0020 MF	3500	3000	5500	≤19	0.80	8.8	66
210.0	53	69	69	138	4.0	2.0	PH332_0700KX301_0030 MF	3500	3500	6000	≤19	0.75	11	64
300.0	46	60	60	120	4.0	2.0	PH332_1000KX301_0030 MF	3500	3500	6000	≤19	0.75	8.8	64

[1] *Based on input speed of 1500 RPM. See page 206.for details on torque calculations.*
[2] *Maximum momentary torque for emergency stops or heavy shock load. (Admissible stops per life of gearhead = 1,000 stops maximum.)*
[3] *Inertia based on maximum input. For lower inertia, using smaller diameter input, contact STOBER.*
* *MF = Motor Adapter with FlexiAdapt® coupling*

Selection Data



Exact Ratio (i)	Output Torque: Nom. M_{2N} [1] Nm	Output Torque: Accel. M_{2acc} Nm	Output Torque: Accel. Torque for Reduced Backlash M_{2accHT} Nm	Output Torque: Peak M_{2NOT} [2] Nm	Back-lash $\Delta\phi_2$ arcmin	Red. Back-lash $\Delta\phi_{2red}$ arcmin	Part Number* (Gearhead + Input)	Max. Input Speed RPM (n1): Continuous EL 1,2,5,6	Max. Input Speed RPM (n1): Continuous EL 3,4	Max. Input Speed RPM (n1): Cyclic All	Motor Shaft [3] Max Ø d_{MW} mm	Input Inertia J_1 kgcm²	Tors. Stiffness C_2 Nm/ arcmin	Oper. Noise L_{pA} dB(A)
PH4KX														
4.000	77	96	96	208	5.5	3.5	PH431_0040KX401_0010 MF	2500	2000	4000	≤24	2.9	11	72
5.000	85	120	120	260	5.0	3.0	PH431_0050KX401_0010 MF	2500	2000	4000	≤24	2.7	15	72
7.000	85	160	168	320	4.5	2.5	PH431_0070KX401_0010 MF	2500	2000	4000	≤24	2.5	19	72
8.000	77	96	96	208	5.5	3.5	PH431_0040KX401_0020 MF	2500	2500	5000	≤24	1.7	11	68
10.00	90	120	120	260	5.0	3.0	PH431_0050KX401_0020 MF	2500	2500	5000	≤24	1.7	15	68
12.00	77	96	96	208	5.5	3.5	PH431_0040KX401_0030 MF	3000	3000	5500	≤24	1.5	11	66
14.00	90	160	168	320	4.5	2.5	PH431_0070KX401_0020 MF	2500	2500	5000	≤24	1.7	19	68
15.00	90	120	120	260	5.0	3.0	PH431_0050KX401_0030 MF	3000	3000	5500	≤24	1.5	15	66
20.00	75	115	115	230	4.0	2.0	PH431_0100KX401_0020 MF	2500	2500	5000	≤24	1.6	18	68
21.00	90	160	168	320	4.5	2.5	PH431_0070KX401_0030 MF	3000	3000	5500	≤24	1.5	19	66
30.00	75	115	115	230	4.0	2.0	PH431_0100KX401_0030 MF	3000	3000	5500	≤24	1.4	18	66
32.00	90	160	173	312	3.5	1.5	PH432_0160KX301_0020 MF	3500	3000	5500	≤19	0.83	25	66
35.00	110	160	174	320	3.5	1.5	PH432_0350KX301_0010 MF	3000	2500	4500	≤19	1.1	30	70
40.00	95	150	150	299	3.5	1.5	PH432_0200KX301_0020 MF	3500	3000	5500	≤19	0.82	27	66
48.00	90	160	173	312	3.5	1.5	PH432_0160KX301_0030 MF	3500	3500	6000	≤19	0.76	25	64
50.00	100	161	174	322	3.5	1.5	PH432_0250KX301_0020 MF	3500	3000	5500	≤19	0.82	29	66
56.00	95	160	173	312	3.5	1.5	PH432_0280KX301_0020 MF	3500	3000	5500	≤19	0.83	29	66
60.00	95	150	150	299	3.5	1.5	PH432_0200KX301_0030 MF	3500	3500	6000	≤19	0.75	27	64
70.00	110	160	174	320	3.5	1.5	PH432_0350KX301_0020 MF	3500	3000	5500	≤19	0.82	30	66
75.00	100	161	174	322	3.5	1.5	PH432_0250KX301_0030 MF	3500	3500	6000	≤19	0.75	29	64
80.00	110	155	169	310	3.5	1.5	PH432_0400KX301_0020 MF	3500	3000	5500	≤19	0.83	29	66
84.00	95	160	173	312	3.5	1.5	PH432_0280KX301_0030 MF	3500	3500	6000	≤19	0.76	29	64
100.0	120	159	174	318	3.0	1.0	PH432_0500KX301_0020 MF	3500	3000	5500	≤19	0.82	30	66
105.0	110	160	174	320	3.5	1.5	PH432_0350KX301_0030 MF	3500	3500	6000	≤19	0.75	30	64
120.0	110	155	169	310	3.5	1.5	PH432_0400KX301_0030 MF	3500	3500	6000	≤19	0.76	29	64
140.0	120	158	164	316	3.0	1.0	PH432_0700KX301_0020 MF	3500	3000	5500	≤19	0.81	27	66
150.0	120	159	174	318	3.0	1.0	PH432_0500KX301_0030 MF	3500	3500	6000	≤19	0.75	30	64
200.0	85	110	110	220	3.0	1.0	PH432_1000KX301_0020 MF	3500	3000	5500	≤19	0.81	20	66
210.0	120	158	164	316	3.0	1.0	PH432_0700KX301_0030 MF	3500	3500	6000	≤19	0.75	27	64
300.0	85	110	110	220	3.0	1.0	PH432_1000KX301_0030 MF	3500	3500	6000	≤19	0.75	20	64

[1] *Based on input speed of 1500 RPM. See page 206.for details on torque calculations.*
[2] *Maximum momentary torque for emergency stops or heavy shock load. (Admissible stops per life of gearhead = 1,000 stops maximum.)*
[3] *Inertia based on maximum input. For lower inertia, using smaller diameter input, contact STOBER.*
* *MF = Motor Adapter with FlexiAdapt® coupling*

PHKX Series: RIGHT ANGLE – Flange Output

Exact Ratio (i)	Output Torque: Nom. [1] M_{2N} Nm	Output Torque: Accel. M_{2acc} Nm	Output Torque: Accel. Torque for Reduced Backlash M_{2accHT} Nm	Output Torque: Peak [2] M_{2NOT} Nm	Back-lash $\Delta\phi_2$ arcmin	Red. Back-lash $\Delta\phi_{2red}$ arcmin	Part Number* (Gearhead + Input)	Max. Input Speed RPM (n1): Continuous EL 1,2,5,6	Max. Input Speed RPM (n1): Continuous EL 3,4	Max. Input Speed RPM (n1): Cyclic All	Motor Shaft [3] Max Ø d_{MW} mm	Input Inertia J_1 kgcm²	Tors. Stiffness C_2 Nm/ arcmin	Oper. Noise L_{pA} dB(A)
PH5KX														
4.000	192	242	242	521	5.5	3.5	PH531_0040KX501_0010 MF	2500	2000	3500	≤32	9.1	28	74
5.000	210	302	302	651	5.0	3.0	PH531_0050KX501_0010 MF	2500	2000	3500	≤32	8.5	37	74
7.000	210	370	387	705	4.5	2.5	PH531_0070KX501_0010 MF	2500	2000	3500	≤32	8.0	46	74
8.000	192	242	242	521	5.5	3.5	PH531_0040KX501_0020 MF	2500	2500	4500	≤32	5.7	28	70
10.00	220	302	302	651	5.0	3.0	PH531_0050KX501_0020 MF	2500	2500	4500	≤32	5.5	37	70
12.00	192	242	242	521	5.5	3.5	PH531_0040KX501_0030 MF	3000	3000	5000	≤32	5.0	28	68
14.00	210	370	387	705	4.5	2.5	PH531_0070KX501_0020 MF	2500	2500	4500	≤32	5.4	46	70
15.00	220	302	302	651	5.0	3.0	PH531_0050KX501_0030 MF	3000	3000	5000	≤32	4.9	37	68
20.00	180	288	288	575	4.0	2.0	PH531_0100KX501_0020 MF	2500	2500	4500	≤32	5.3	44	70
21.00	210	370	387	705	4.5	2.5	PH531_0070KX501_0030 MF	3000	3000	5000	≤32	4.8	46	68
30.00	180	288	288	575	4.0	2.0	PH531_0100KX501_0030 MF	3000	3000	5000	≤32	4.8	44	68
32.00	230	355	355	696	3.5	1.5	PH532_0160KX401_0020 MF	2500	2500	5000	≤24	1.7	63	68
35.00	290	385	400	705	3.5	1.5	PH532_0350KX401_0010 MF	2500	2000	4000	≤24	2.5	78	72
40.00	250	370	387	705	3.5	1.5	PH532_0200KX401_0020 MF	2500	2500	5000	≤24	1.7	71	68
48.00	230	355	355	696	3.5	1.5	PH532_0160KX401_0030 MF	3000	3000	5500	≤24	1.5	63	66
50.00	260	385	400	705	3.5	1.5	PH532_0250KX401_0020 MF	2500	2500	5000	≤24	1.7	75	68
56.00	240	355	387	696	3.5	1.5	PH532_0280KX401_0020 MF	2500	2500	5000	≤24	1.7	72	68
60.00	250	370	387	705	3.5	1.5	PH532_0200KX401_0030 MF	3000	3000	5500	≤24	1.5	71	66
70.00	290	385	400	705	3.5	1.5	PH532_0350KX401_0020 MF	2500	2500	5000	≤24	1.7	78	68
75.00	260	385	400	705	3.5	1.5	PH532_0250KX401_0030 MF	3000	3000	5500	≤24	1.4	75	66
80.00	260	355	356	696	3.5	1.5	PH532_0400KX401_0020 MF	2500	2500	5000	≤24	1.7	71	68
84.00	240	355	387	696	3.5	1.5	PH532_0280KX401_0030 MF	3000	3000	5500	≤24	1.5	72	66
100.0	296	385	400	705	3.0	1.0	PH532_0500KX401_0020 MF	2500	2500	5000	≤24	1.7	77	68
105.0	290	385	400	705	3.5	1.5	PH532_0350KX401_0030 MF	3000	3000	5500	≤24	1.5	78	66
120.0	260	355	356	696	3.5	1.5	PH532_0400KX401_0030 MF	3000	3000	5500	≤24	1.5	71	66
140.0	284	370	387	705	3.0	1.0	PH532_0700KX401_0020 MF	2500	2500	5000	≤24	1.6	69	68
150.0	296	385	400	705	3.0	1.0	PH532_0500KX401_0030 MF	3000	3000	5500	≤24	1.4	77	66
200.0	221	288	288	575	3.0	1.0	PH532_1000KX401_0020 MF	2500	2500	5000	≤24	1.6	52	68
210.0	284	370	387	705	3.0	1.0	PH532_0700KX401_0030 MF	3000	3000	5500	≤24	1.4	69	66
300.0	221	288	288	575	3.0	1.0	PH532_1000KX401_0030 MF	3000	3000	5500	≤24	1.4	52	66

[1] *Based on input speed of 1500 RPM. See page 206.for details on torque calculations.*
[2] *Maximum momentary torque for emergency stops or heavy shock load. (Admissible stops per life of gearhead = 1,000 stops maximum.)*
[3] *Inertia based on maximum input. For lower inertia, using smaller diameter input, contact STOBER.*
* *MF = Motor Adapter with FlexiAdapt® coupling*

Selection Data



Exact Ratio (i)	Output Torque: Nom. [1] M_{2N} Nm	Output Torque: Accel. M_{2acc} Nm	Output Torque: Accel. Torque for Reduced Backlash M_{2accHT} Nm	Output Torque: Peak [2] M_{2NOT} Nm	Back-lash $\Delta\phi_2$ arcmin	Red. Back-lash $\Delta\phi_{2red}$ arcmin	Part Number* (Gearhead + Input)	Max. Input Speed RPM (n1): Continuous EL 1,2,5,6	Max. Input Speed RPM (n1): Continuous EL 3,4	Max. Input Speed RPM (n1): Cyclic All	Motor Shaft [3] Max Ø d_{MW} mm	Input Inertia J_1 kgcm²	Tors. Stiffness C_2 Nm/ arcmin	Oper. Noise L_{pA} dB(A)
PH7KX														
4.000	384	480	480	917	5.5	3.5	PH731_0040KX701_0010 MF	1800	1600	3000	≤38	30	94	76
5.000	440	600	600	1146	5.0	3.0	PH731_0050KX701_0010 MF	1800	1600	3000	≤38	28	111	76
7.000	440	840	840	1604	4.5	2.5	PH731_0070KX701_0010 MF	1800	1600	3000	≤38	26	122	76
8.000	384	480	480	1042	5.5	3.5	PH731_0040KX701_0020 MF	1800	1800	3500	≤38	16	94	72
10.00	440	600	600	1302	5.0	3.0	PH731_0050KX701_0020 MF	1800	1800	3500	≤38	15	111	72
12.00	384	480	480	1042	5.5	3.5	PH731_0040KX701_0030 MF	2100	2100	4000	≤38	13	94	70
14.00	440	840	840	1720	4.5	2.5	PH731_0070KX701_0020 MF	1800	1800	3500	≤38	15	122	72
15.00	440	600	600	1302	5.0	3.0	PH731_0050KX701_0030 MF	2100	2100	4000	≤38	13	111	70
20.00	350	575	575	1150	4.0	2.0	PH731_0100KX701_0020 MF	1800	1800	3500	≤38	15	110	72
21.00	440	840	840	1720	4.5	2.5	PH731_0070KX701_0030 MF	2100	2100	4000	≤38	13	122	70
30.00	350	575	575	1150	4.0	2.0	PH731_0100KX701_0030 MF	2100	2100	4000	≤38	13	110	70
32.00	450	740	740	1480	3.5	1.5	PH732_0160KX501_0020 MF	2500	2500	4500	≤32	5.6	152	70
35.00	540	866	908	1720	3.5	1.5	PH732_0350KX501_0010 MF	2500	2000	3500	≤32	8.0	172	74
40.00	460	805	845	1610	3.5	1.5	PH732_0200KX501_0020 MF	2500	2500	4500	≤32	4.9	157	70
48.00	450	740	740	1480	3.5	1.5	PH732_0160KX501_0030 MF	3000	3000	5000	≤32	4.9	152	68
50.00	500	866	908	1720	3.5	1.5	PH732_0250KX501_0020 MF	2500	2500	4500	≤32	5.4	166	70
56.00	540	770	880	1540	3.5	1.5	PH732_0280KX501_0020 MF	2500	2500	4500	≤32	5.5	176	70
60.00	460	805	845	1610	3.5	1.5	PH732_0200KX501_0030 MF	3000	3000	5000	≤32	4.9	157	68
70.00	540	866	908	1720	3.5	1.5	PH732_0350KX501_0020 MF	2500	2500	4500	≤32	5.4	172	70
75.00	500	866	908	1720	3.5	1.5	PH732_0250KX501_0030 MF	3000	3000	5000	≤32	4.8	166	68
80.00	540	770	770	1540	3.5	1.5	PH732_0400KX501_0020 MF	2500	2500	4500	≤32	5.5	174	70
84.00	540	770	880	1540	3.5	1.5	PH732_0280KX501_0030 MF	3000	3000	5000	≤32	4.9	176	68
100.0	600	830	834	1660	3.0	1.0	PH732_0500KX501_0020 MF	2500	2500	4500	≤32	5.4	171	70
105.0	540	866	908	1720	3.5	1.5	PH732_0350KX501_0030 MF	3000	3000	5000	≤32	4.8	172	68
120.0	540	770	770	1540	3.5	1.5	PH732_0400KX501_0030 MF	3000	3000	5000	≤32	4.9	174	68
140.0	600	809	847	1617	3.0	1.0	PH732_0700KX501_0020 MF	2500	2500	4500	≤32	5.3	152	70
150.0	600	830	834	1660	3.0	1.0	PH732_0500KX501_0030 MF	3000	3000	5000	≤32	4.8	171	68
200.0	423	550	550	1100	3.0	1.0	PH732_1000KX501_0020 MF	2500	2500	4500	≤32	5.3	121	70
210.0	600	809	847	1617	3.0	1.0	PH732_0700KX501_0030 MF	3000	3000	5000	≤32	4.8	152	68
300.0	423	550	550	1100	3.0	1.0	PH732_1000KX501_0030 MF	3000	3000	5000	≤32	4.8	121	68

[1] *Based on input speed of 1500 RPM. See page 206.for details on torque calculations.*
[2] *Maximum momentary torque for emergency stops or heavy shock load. (Admissible stops per life of gearhead = 1,000 stops maximum.)*
[3] *Inertia based on maximum input. For lower inertia, using smaller diameter input, contact STOBER.*
* *MF = Motor Adapter with FlexiAdapt® coupling*

PHKX Series: RIGHT ANGLE – Flange Output

Exact Ratio (i)	Output Torque: Nom. [1] M_{2N} Nm	Output Torque: Accel. M_{2acc} Nm	Output Torque: Accel. Torque for Reduced Backlash M_{2accHT} Nm	Output Torque: Peak [2] M_{2NOT} Nm	Back-lash $\Delta\phi_2$ arcmin	Red. Back-lash $\Delta\phi_{2red}$ arcmin	Part Number* (Gearhead + Input)	Max. Input Speed RPM (n1): Continuous EL 1,2,5,6	Max. Input Speed RPM (n1): Continuous EL 3,4	Max. Input Speed RPM (n1): Cyclic All	Motor Shaft [3] Max Ø d_{MW} mm	Input Inertia J_1 kgcm²	Tors. Stiffness C_2 Nm/arcmin	Oper. Noise L_{pA} dB(A)
PH8KX														
4.000	384	480	480	917	5.5	3.5	PH831_0040KX701_0010 MF	1800	1600	3000	≤38	52	122	76
5.000	480	600	600	1146	5.0	3.0	PH831_0050KX701_0010 MF	1800	1600	3000	≤38	41	170	76
7.000	672	840	840	1604	4.5	2.5	PH831_0070KX701_0010 MF	1800	1600	3000	≤38	34	232	76
8.000	384	480	480	1042	5.5	3.5	PH831_0040KX701_0020 MF	1800	1800	3500	≤38	21	122	72
10.00	772	1200	1200	2292	4.0	2.0	PH831_0050KX701_0020 MF	1800	1600	3500	≤38	29	253	76
12.00	384	480	480	1042	5.5	3.5	PH831_0040KX701_0030 MF	2100	2100	4000	≤38	15	122	70
14.00	672	840	840	1823	4.5	2.5	PH831_0070KX701_0020 MF	1800	1800	3500	≤38	17	232	72
15.00	480	600	600	1302	5.0	3.0	PH831_0050KX701_0030 MF	2100	2100	4000	≤38	14	170	70
20.00	850	1200	1200	2604	4.0	2.0	PH831_0100KX701_0020 MF	1800	1800	3500	≤38	16	253	72
21.00	672	840	840	1823	4.5	2.5	PH831_0070KX701_0030 MF	2100	2100	4000	≤38	13	232	70
30.00	850	1200	1200	2604	4.0	2.0	PH831_0100KX701_0030 MF	2100	2100	4000	≤38	13	253	70
32.00	1100	1860	1860	3929	3.5	1.5	PH832_0160KX701_0020 MF	1800	1800	3500	≤38	16	415	72
40.00	1250	2100	2300	4200	3.5	1.5	PH832_0200KX701_0020 MF	1800	1800	3500	≤38	15	462	72
48.00	1100	1860	1860	3929	3.5	1.5	PH832_0160KX701_0030 MF	2100	2100	4000	≤38	13	415	70
50.00	1300	2100	2300	4200	3.5	1.5	PH832_0250KX701_0020 MF	1800	1800	3500	≤38	15	479	72
56.00	1100	2000	2000	3929	3.5	1.5	PH832_0280KX701_0020 MF	1800	1800	3500	≤38	16	451	72
60.00	1250	2100	2300	4200	3.5	1.5	PH832_0200KX701_0030 MF	2100	2100	4000	≤38	13	462	70
70.00	1450	2100	2300	4200	3.5	1.5	PH832_0350KX701_0020 MF	1800	1800	3500	≤38	15	489	72
75.00	1300	2100	2300	4200	3.5	1.5	PH832_0250KX701_0030 MF	2100	2100	4000	≤38	13	479	70
80.00	1100	1920	1936	3840	3.5	1.5	PH832_0400KX701_0020 MF	1800	1800	3500	≤38	16	440	72
84.00	1100	2000	2000	3929	3.5	1.5	PH832_0280KX701_0030 MF	2100	2100	4000	≤38	13	451	70
100.0	1557	2100	2300	4200	3.0	1.0	PH832_0500KX701_0020 MF	1800	1800	3500	≤38	15	481	72
105.0	1450	2100	2300	4200	3.5	1.5	PH832_0350KX701_0030 MF	2100	2100	4000	≤38	13	489	70
120.0	1100	1920	1936	3840	3.5	1.5	PH832_0400KX701_0030 MF	2100	2100	4000	≤38	13	440	70
140.0	1422	1848	1936	3696	3.0	1.0	PH832_0700KX701_0020 MF	1800	1800	3500	≤38	15	421	72
150.0	1557	2100	2300	4200	3.0	1.0	PH832_0500KX701_0030 MF	2100	2100	4000	≤38	13	481	70
200.0	1062	1380	1380	2760	3.0	1.0	PH832_1000KX701_0020 MF	1800	1800	3500	≤38	15	332	72
210.0	1422	1848	1936	3696	3.0	1.0	PH832_0700KX701_0030 MF	2100	2100	4000	≤38	13	421	70
300.0	1062	1380	1380	2760	3.0	1.0	PH832_1000KX701_0030 MF	2100	2100	4000	≤38	12	332	70

[1] *Based on input speed of 1500 RPM. See page 206.for details on torque calculations.*
[2] *Maximum momentary torque for emergency stops or heavy shock load. (Admissible stops per life of gearhead = 1,000 stops maximum.)*
[3] *Inertia based on maximum input. For lower inertia, using smaller diameter input, contact STOBER.*
* *MF = Motor Adapter with FlexiAdapt® coupling*



Exact Ratio (i)	Output Torque: Nom. M_{2N} [1] Nm	Output Torque: Accel. M_{2acc} Nm	Output Torque: Accel. Torque for Reduced Backlash M_{2accHT} Nm	Output Torque: Peak M_{2NOT} [2] Nm	Back-lash $\Delta\phi_2$ arcmin	Red. Back-lash $\Delta\phi_{2red}$ arcmin	Part Number* (Gearhead + Input)	Max. Input Speed RPM (n1): Continuous EL 1,2,5,6	Max. Input Speed RPM (n1): Continuous EL 3,4	Max. Input Speed RPM (n1): Cyclic All	Motor Shaft [3] Max Ø d_{MW} mm	Input Inertia J_1 kgcm²	Tors. Stiffness C_2 Nm/ arcmin	Oper. Noise L_{pA} dB(A)
PH9KX														
12.00	1116	1395	1395	2839	4.0	2.0	PH942_0120KX701_0010 MF	1800	1600	3000	≤38	76	655	76
16.00	1488	1860	1860	3785	3.5	1.5	PH942_0160KX701_0010 MF	1800	1600	3000	≤38	48	808	76
18.00	1674	2093	2093	4258	3.5	1.5	PH942_0180KX701_0010 MF	1800	1600	3000	≤38	70	832	76
20.00	1860	2325	2325	4731	3.5	1.5	PH942_0200KX701_0010 MF	1800	1600	3000	≤38	39	908	76
24.00	1116	1395	1395	3226	4.0	2.0	PH942_0120KX701_0020 MF	1800	1800	3500	≤38	27	655	72
30.00	2790	3488	3488	7097	3.5	1.5	PH942_0300KX701_0010 MF	1800	1600	3000	≤38	37	988	76
32.00	1488	1860	1860	4301	3.5	1.5	PH942_0160KX701_0020 MF	1800	1800	3500	≤38	20	808	72
36.00	1674	2093	2093	4839	3.5	1.5	PH942_0180KX701_0020 MF	1800	1800	3500	≤38	26	832	72
40.00	1860	2325	2325	5376	3.5	1.5	PH942_0200KX701_0020 MF	1800	1800	3500	≤38	18	908	72
42.00	3500	4883	4883	9935	3.0	1.0	PH942_0420KX701_0010 MF	1800	1600	3000	≤38	31	1035	76
48.00	2232	2790	2790	6452	3.5	1.5	PH942_0240KX701_0020 MF	1800	1800	3500	≤38	20	932	72
54.00	1674	2093	2093	4839	3.5	1.5	PH942_0180KX701_0030 MF	2100	2100	4000	≤38	17	832	70
60.00	2790	3488	3488	8065	3.5	1.5	PH942_0300KX701_0020 MF	1800	1800	3500	≤38	18	988	72
72.00	2232	2790	2790	6452	3.5	1.5	PH942_0240KX701_0030 MF	2100	2100	4000	≤38	15	932	70
80.00	3200	4600	4600	9200	3.5	1.5	PH942_0400KX701_0020 MF	1800	1800	3500	≤38	16	998	72
84.00	3500	4883	4883	10000	3.0	1.0	PH942_0420KX701_0020 MF	1800	1800	3500	≤38	16	1035	72
90.00	2790	3488	3488	8065	3.5	1.5	PH942_0300KX701_0030 MF	2100	2100	4000	≤38	14	988	70
96.00	3500	5000	5000	10000	3.0	1.0	PH942_0480KX701_0020 MF	1800	1800	3500	≤38	16	1033	72
120.0	3500	5000	5000	10000	3.0	1.0	PH942_0600KX701_0020 MF	1800	1800	3500	≤38	16	1033	72
126.0	3500	4883	4883	10000	3.0	1.0	PH942_0420KX701_0030 MF	2100	2100	4000	≤38	13	1035	70
144.0	3500	5000	5000	10000	3.0	1.0	PH942_0480KX701_0030 MF	2100	2100	4000	≤38	13	1033	70
180.0	3500	5000	5000	10000	3.0	1.0	PH942_0600KX701_0030 MF	2100	2100	4000	≤38	13	1033	70

Exact Ratio (i)	Output Torque: Nom. [1] M_{2N}	Output Torque: Accel. M_{2acc}	Output Torque: Accel. Torque for Reduced Backlash M_{2accHT}	Output Torque: Peak [2] M_{2NOT}	Backlash $\Delta\phi_2$	Red. Backlash $\Delta\phi_{2red}$	Part Number* (Gearhead + Input)	Max. Input Speed RPM (n1): Continuous EL 1,2,5,6	Max. Input Speed RPM (n1): Continuous EL 3,4	Max. Input Speed RPM (n1): Cyclic	Motor Shaft [3] Max Ø d_{MW}	Input Inertia J_1	Tors. Stiffness C_2	Oper. Noise L_{pA}
	Nm	Nm	Nm	Nm	arcmin	arc-min		EL 1,2,5,6	EL 3,4	All	mm	kgcm²	Nm/ arcmin	dB(A)
PH10KX														
18.00	1674	2093	–	4258	3.5	–	PH1042_0180KX701_0010 MF	1800	1600	3000	≤38	72	1127	76
24.00	2232	2790	–	5677	3.5	–	PH1042_0240KX701_0010 MF	1800	1600	3000	≤38	45	1328	76
30.00	2790	3488	–	7097	3.5	–	PH1042_0300KX701_0010 MF	1800	1600	3000	≤38	38	1444	76
36.00	1674	2093	–	4839	3.5	–	PH1042_0180KX701_0020 MF	1800	1800	3500	≤38	26	1127	72
42.00	3906	4883	–	9935	3.0	–	PH1042_0420KX701_0010 MF	1800	1600	3000	≤38	31	1545	76
48.00	2232	2790	–	6452	3.5	–	PH1042_0240KX701_0020 MF	1800	1800	2500	≤38	20	1328	72
54.00	1674	2093	–	4839	3.5	–	PH1042_0180KX701_0030 MF	2100	2100	4000	≤38	18	1127	70
60.00	2790	3488	–	8065	3.5	–	PH1042_0300KX701_0020 MF	1800	1800	3500	≤38	18	1444	72
72.00	2232	2790	–	6452	3.5	–	PH1042_0240KX701_0030 MF	2100	2100	4000	≤38	15	1328	70
84.00	3906	4883	–	11290	3.0	–	PH1042_0420KX701_0020 MF	1800	1800	3500	≤38	16	1545	72
90.00	2790	3488	–	8065	3.5	–	PH1042_0300KX701_0030 MF	2100	2100	4000	≤38	14	1444	70
120.0	4900	6975	–	14000	3.0	–	PH1042_0600KX701_0020 MF	1800	1800	3500	≤38	16	1542	72
126.0	3906	4883	–	11290	3.0	–	PH1042_0420KX701_0030 MF	2100	2100	4000	≤38	13	1545	70
180.0	4900	6975	–	14000	3.0	–	PH1042_0600KX701_0030 MF	2100	2100	4000	≤38	13	1542	70



PHKX Series Dimensions — All Units

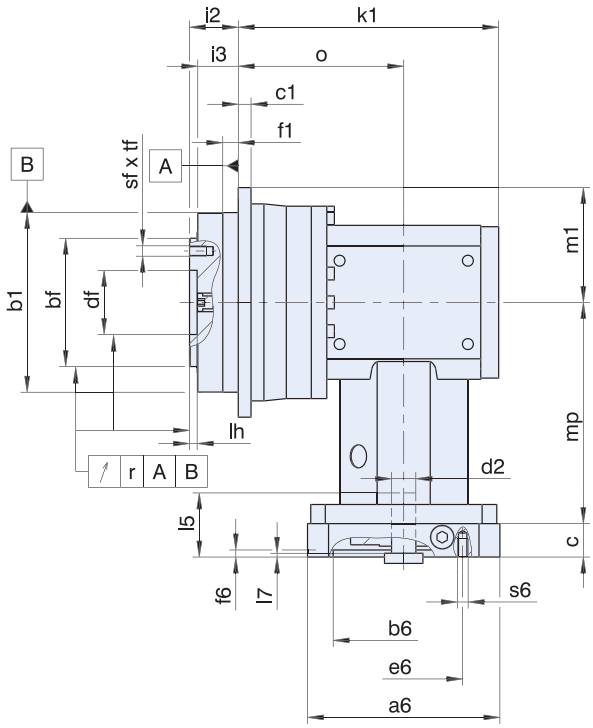

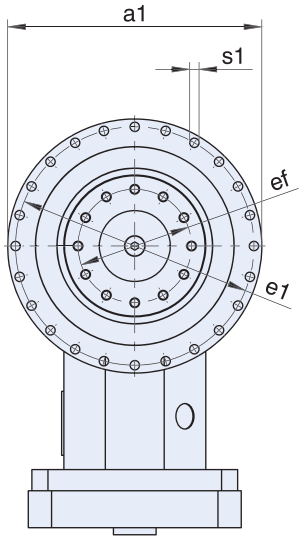

** See Motor Mounting Plate Option, page <?> for details.*

PH3 | PH4

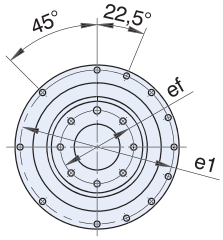

PH5

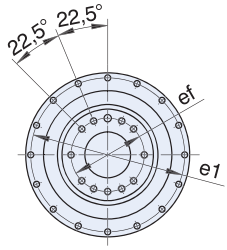

PH7 | PH8

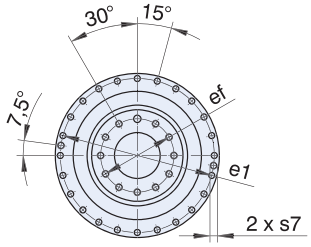

PH9 | PH10

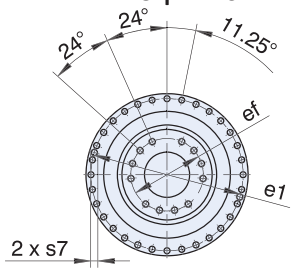

Table 1 Dimensions (mm)

Unit	Øa1	Øb1	Øbf	c1	Ødf	Øe1	Øef	f1	i2	i3	k1	lh	m1	mp	o	r	Øs1	s7	sf	tf
PH331_KX301	86^{h7}	64^{h7}	40^{h7}	4	20.0^{H6}	79	31.5	7	19.5	16.5	113.5	4	43.0	95.5	73.5	0.020	4.5	–	M5	7
PH332_KX301	86^{h7}	64^{h7}	40^{h7}	4	20.0^{H6}	79	31.5	7	19.5	16.5	147.0	4	43.0	95.5	107.0	0.020	4.5	–	M5	7
PH431_KX401	118^{h7}	90^{h7}	63^{h7}	7	31.5^{H6}	109	50	10	30.0	24.0	139.0	6	59.0	104.0	89.0	0.020	5.5	–	M6	11
PH432_KX301	118^{h7}	90^{h7}	63^{h7}	7	31.5^{H6}	109	50	10	30.0	24.0	161.5	6	59.0	95.5	121.5	0.020	5.5	–	M6	11
PH531_KX501	145^{h7}	110^{h7}	80^{h7}	8	40.0^{H6}	135	63	12	29.0	23.0	168.0	6	72.5	132.0	109.0	0.020	5.5	–	M6	11
PH532_KX401	145^{h7}	110^{h7}	80^{h7}	8	40.0^{H6}	135	63	12	29.0	23.0	187.5	6	72.5	104.0	137.5	0.020	5.5	–	M6	11
PH731_KX701	179^{h7}	140^{h7}	100^{h7}	10	50.0^{H6}	168	80	12	38.0	32.0	203.0	6	89.5	172.5	129.0	0.025	6.6	–	M8	14
PH732_KX501	179^{h7}	140^{h7}	100^{h7}	10	50.0^{H6}	168	80	12	38.0	32.0	226.0	6	89.5	132.0	167.0	0.025	6.6	–	M8	14
PH831_KX701	247^{h7}	200^{h7}	160^{h7}	12	80.0^{H6}	233	125	15	50.0	42.0	235.5	8	123.5	172.5	161.5	0.030	9.0	M10	M10	18
PH832_KX701	247^{h7}	200^{h7}	160^{h7}	12	80.0^{H6}	233	125	15	50.0	42.0	293.0	8	123.5	172.5	219.0	0.030	9.0	M10	M10	18
PH942_KX701	-	255^{h7}	180^{h7}	18	90.0^{H6}	280	140	20	66.0	55.0	336.0	12	150.0	172.5	262.0	0.030	13.5	M8	M16	24
PH1042_KX701	-	285^{h7}	200^{h7}	20	95.0^{H6}	310	160	20	75.0	60.0	343.0	10	165.0	172.5	269.0	0.040	13.5	M10	M20	28

Example dimensions for the motor connection

Unit	Øb6	Øe6	Ød2max	l5	□a6	c	f6	l7	s6
PH_KX301_MF	60^{H7}	75	19	40	75	18	3.5	5.5	M5
PH_KX401_MF	95^{H7}	115	24	42	100	21	4.0	4.5	M8
PH_KX501_MF	110^{H7}	130	32	53	120	24	4.0	5.0	M8
PH_KX701_MF	130^{H7}	165	38	64	150	26	5.5	8.0	M10

In the table above, you will find example dimensions for the motor connection for the MF motor adapter. **Note that when dimension c is lengthened (depending on the motor used), dimensions c6, l5 and lg are also lengthened accordingly.**

PHK Series: RIGHT ANGLE – Flange Output

PHK Features

- 16:1 to 591:1 ratios (higher ratios available. Contact STOBER.)
- Quiet running (<63dB(A))
- High load capacity and tilting rigidity through symmetrical bearing arrangement
- FKM seals for extended gearbox life
- Large motor input option to accept bigger diameter motor shafts so you don't use an oversized gearbox
- Error free motor mounting and quick changeover with toleranced pilot on motor plate
- Low no load running torque, giving you more torque for your application
- Magnetic oil filtration to remove contaminants to prevent breakdowns
- Build and ship in one day
- Assembled in the USA

STOBER PHK provides a right angle option with planetary gearing. The PHK provides a more compact, precise solution, and can handle higher input speeds. Every gearbox is made to order. STOBER will custom whatever you need to fit your application. Contact us today to learn more.

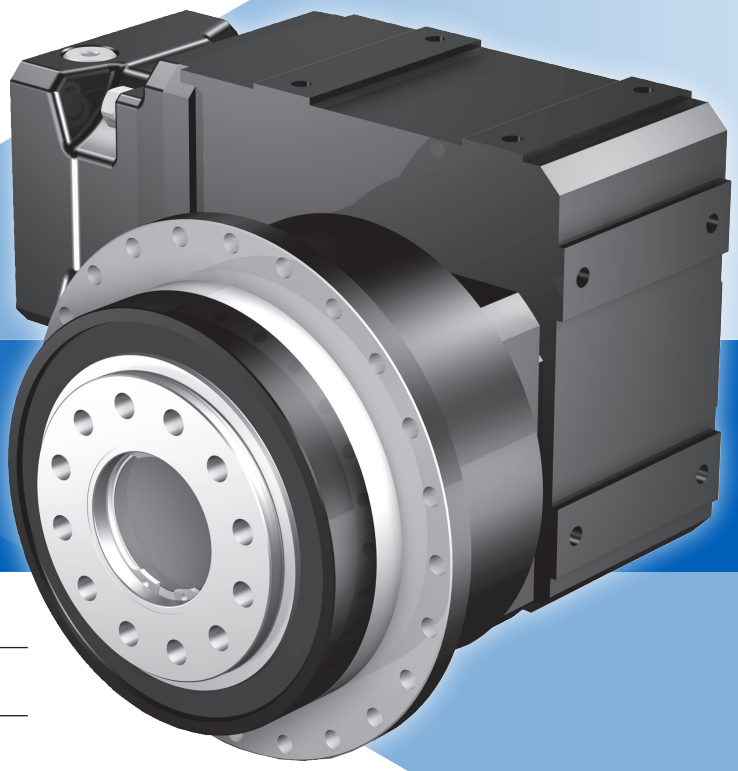

SHIPS in 1 DAY!
NO EXPEDITE FEE FOR 24 HOUR SERVICE

General Specifications

Ambient Temperature	0°C to +40°C (104°F) [Unit temperature <90°C Max]
Backlash	≤3.5 (see performance overview chart, page 220)
Coating	Standard Black (RAL-9005)
Degree of Protection	IP65
Direction of Rotation	See page 221
Efficiency	94%
Input RPM	Up to 6,000 RPM
Installation	Requires 12.9 fasteners. See page 288, for more information
Lubrication	Lubricated for life – standard Mobil SHC629; option food grade Mobil SHC CIBUS 150
Mounting Position	Must be specified, see page 221
Warranty	5 Year Limited (2 Years on normal wear items: bearings, seals, etc.)

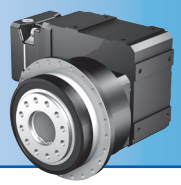

Overview

Selection Options *At-a-Glance*

Using the **Selection Data** table later in this section, select the PHK Series Gearhead with the appropriate performance and design options tailored to your motor choice and exact application requirements. Use the part number guide below as a reference to build a part number for the complete gearhead assembly.

Part Number Examples:

	1	2	3	4	5	6	7	8	9	0	!	@	
PHK	PH	5	3	1	S	F	S	S	0040	K102VF	0040	ME10	EL1 *

	Design Option	Part Number Code	Description
1	**Series**	PH	Rotating flange output planetary
2	**Size**	5 7 8 9 10	5 sizes of gearhead
3	**Generation**	3 4	Generation 3 (Sizes 5-8) Generation 4 (Sizes 9 & 10)
4	**# of Stages**	1	One stage for ratios of ≤ 10:1
5	**Housing**	S	Standard mounting style
6	**Output Shaft**	F	Flange output
7	**Bearing**	S V	Standard Reinforced Bearing (Size 5)
8	**Backlash**	S	Standard Backlash (Size 5-9 only)
9	**Ratio**	0040	Ratios range from 4:1 to 100:1 (0040=4:1; 0055=5.5:1; 1000=100:1, ect.)
0	**Secondary Unit**	K102VF	K Series helical/bevel unit: 5 sizes, 2 or 3 stages, with output shaft (V) and flange (F)
!	**Secondary Unit Ratio**	0040	Ratios from 4:1 to 78:1 (0010=1:1; 0020=2:1; 0030=3:1)
@	**Motor Adapter**	ME10 - ME50 MB	Motor Adapter with EasyAdapt coupling ServoStop with motor adapter with brake (Contact factory)
*	**Mounting Position**	EL1 EL2 EL3 EL4 EL5 EL6	Required special instruction for all units, see page 221

Options

ME Adapter Option

- MSS1 Seal – special input seal for longer life (For sizes P5-9). Contact factory for this option.
- Peak Torque Booster – pinion securing element for shock loads, increasing peak torque up to 80%.

Integrated Safety Brake

- ServoStop – provides dynamic braking during power failures or emergency stops in hazardous situations. Contact factory for this option.

Coating Option

- Available with multi-layer, industrial 316 stainless steel epoxy coating. Contact factory for this option.

ATEX

- ATmosphere EXplosible – rated for explosive environments. Contact factory for this option and allow additional time for delivery.

PHK Performance Overview

PHK Series performance is dependent on several factors including duty cycle, bearing design, gearhead size and stage configuration, among others. Use the chart below for preliminary evaluation, then use the following performance chart and selection information on the following pages for specific performance sizing and selection.

Size/Generation/# of Stages		PH521	PH721		PH821		PH931	PH1031
Secondary Unit		K102	K102	K202	K202	K302	K513	K613
Acceleration Torque M_{2BMAX}	Nm	385	869	882	1478	1848	5000	7500
Output Torque Nom. [1] M_{2N}	Nm	220	440		1000	1100	3000	5000
Torsional Stiffness C_2	Nm/arcmin	62	11	117.0	260	245	730	1210
Torsional Backlash [2] arcmin	Δϕstandard	≤4	≤4		≤3.5	≤4	≤4	≤4
	Δϕ Reduced	≤2.0	≤1.5		≤1.5	≤1.5	≤2.0	-
Input Speed Max. n_{1MAX}	Continuous	4000	4000	4000	4000	3800	3400	3100
	Cyclic	7000	7000	6500	6500	6000	5000	4500
Efficiency (@nom torque)	%	93	93		93		92	92
Weight	kg	18	22.2	32.6	51	56	96	148
	lbs	39.6	48.8	71.7	112.2	123.2	211.6	326
Noise [3]	dB(A)	≤63	≤63	≤64	≤64	≤65	≤65	≤65
Performance by Bearing Design Option [4]								
Permitted Axial Force F_{2ax100}	N	4150	6150		10,050		33,000	50,000
Permitted Tilting Torque M_{2K100}	Nm	440	1,466		3,486		7,500	8,800
Performance by Reinforced Bearing Design Option – Choose V Option [4]								
Permitted Axial Force F_{2ax100}	N	5000	—		—		—	—
Permitted Tilting Torque ≤100RPM M_{2K100}	Nm	572	—		—		—	—

[1] *Ratings based on input speed (n_1) of 1500 RPM. To calculate torque at higher input speeds, contact the factory.*

[2] *Tested at 1.5% of nominal torque and recorded on the output side of the gearhead. For lower backlash, contact STOBER technical support.*

[3] *Measurement at one (1) meter distance with input speed (n_1) of 1500 RPM.*

[4] *Rating based on output speed (n_2) of 100 RPM. For values at other speeds see page 223.*

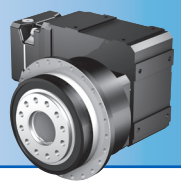

Overview

PHK Series Direction of Rotation

For PHK units, the “PH” Series planetary output unit can be mounted on either the right (Side 3) or the left (Side 4) of the “K” Series right angle secondary unit. Note CCW input direction of rotation and CW output shaft direction with both mounting configurations.

IMPORTANT: When ordering, Mounting Side 3 or Side 4 MUST BE SPECIFIED.

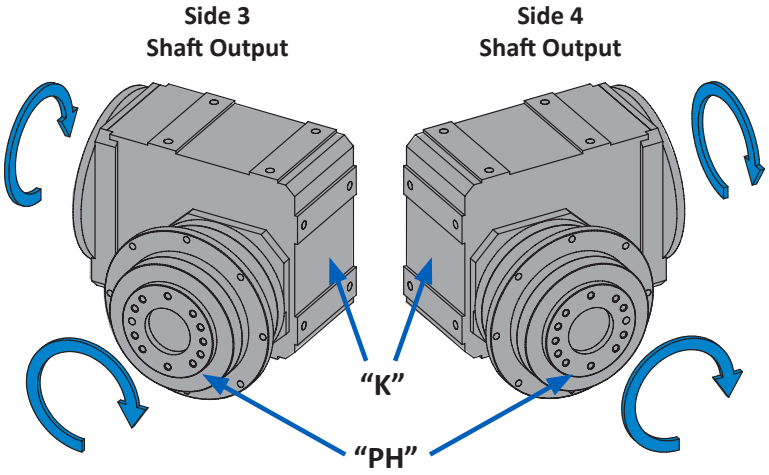

PHK Mounting Position Options

When ordering, the Mounting Position MUST BE SPECIFIED using one of the Mounting Position order codes below.

Note: the code relates to the orientation side that faces down. For example, EL1 has side 1 facing down, EL2 has side 2 facing down, etc.

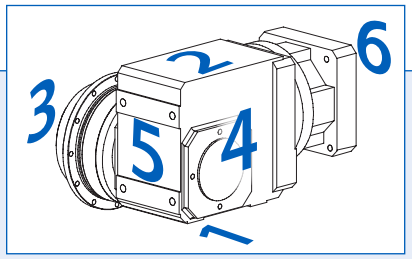

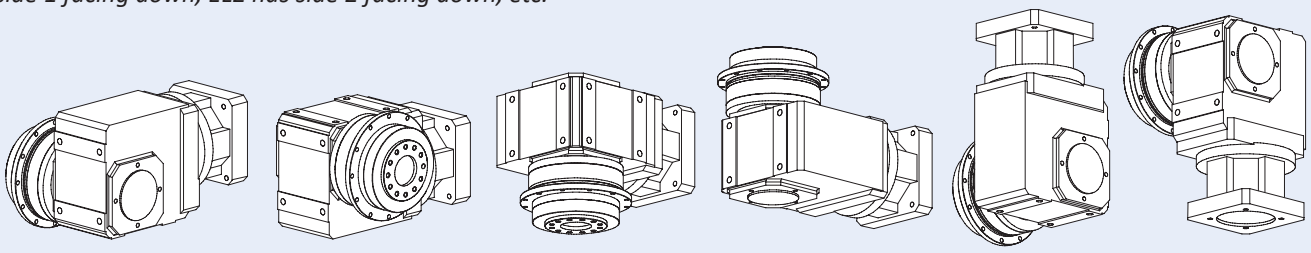

PHK Series Motor Mounting Plate Access Hole

Access to the clamping screw for the motor coupling is located on the 270° side of the motor mounting plate at the location shown. If necessary, the motor mounting plate can be rotated in the field, if a 0°, 90° or 180° orientation for the access hole is desirable.

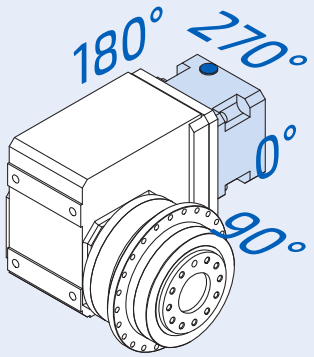

PHK Series Motor Mounting Plate Option

STOBER Servo Gearheads fit the motor of your choice with the appropriate motor mounting plate assembled between the motor and the gearhead.

NOTE: When ordering a gearhead:

- Specify the motor manufacturer and part number
- Provide the motor drawing with dimensions, or specify the motor mounting dimensions (per the list shown at right)

For a precise dimension on a specific motor, or for general assistance, we recommend you contact STOBER Technical Support.

Customer Required Dimensions for Properly Sized Motor Mounting Plate

Motor information required with Motor Adapter
(MF option for PHKX; ME option for PHK adn PHQK)

d2	Motor Shaft Diameter (If an adapter bushing is required it will be supplied with the motor plate.)
b6	Pilot Diameter
e6	Bolt Circle Diameter
s6	Bolt Diameter
l5	Motor Shaft Length
f6	Pilot Length
a6	Square Flange (Optional – motor plate will typically be made to match this dimension.)

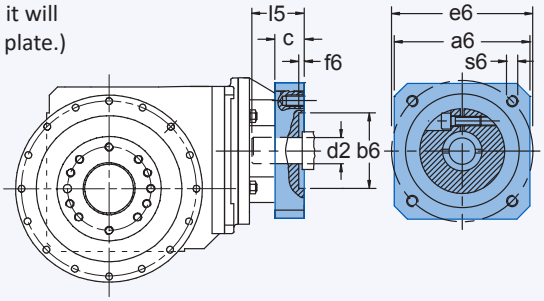

PHK Motor Mounting Plate Dimensions — mm (Gearhead Part Number Specific)	ME10	ME20	ME30	ME40	ME50
Maximum Allowed Motor Shaft Dia.d2	19	32	38	48	60
Minimum Allowed Motor Plate Thickness c*	21	24	25	33	43

** Note that the c motor plate thickness is determined by the motor shaft length. The minimum motor plate thickness is the value listed.*

PHK Series Permissible Motor Tilting Torque

The permissible tilting torque of the motor attached to the gear unit is a result of the static and dynamic load "F" from the motor weight, mass acceleration, and vibration multiplied by the distance from the center of gravity "l_s" of the motor.

M_{1K}	PHK (ME Motor Adapters)				
	ME10	ME20	ME30	ME40	ME50
Nm	25	60	125	250	600

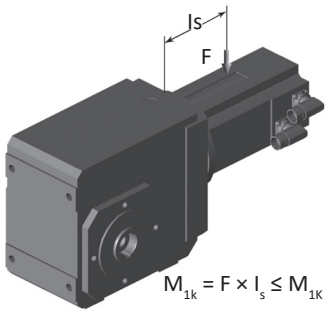

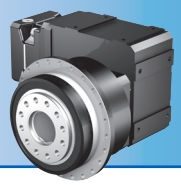

PHK Series Permissible Output Shaft Load and Tilting Moments – Standard Bearings

	z_2	F_{2ax100}	$F_{2rad100}$	$F_{2rad,acc}$	M_{2K100}	$M_{2K,acc}$	c_{2K}
	Distance of Shaft Shoulder to Center of Output Bearing	Permitted Axial Force	Permitted Radial Force ≤100RPM	Radial Acceleration Force	Permitted Tilting Torque ≤100RPM	Permitted Acceleration Tilting Torque	Tilting Stiffness
Size	mm	N	N	N	Nm	Nm	Nm/arcmin
5	97.0	4,150	4,536	4,897	440	475	429
7	86.0	6,150	17,045	17,045	1,466	1,466	500
8	125.5	10,050	27,778	27,778	3,486	3,486	1,550
9	155.0	33,000	48,387	70,968	7,500	11,000	7,500
10	171.0	50,000	51,462	73,099	8,800	12,500	9,500

PHK Series Permissible Output Shaft Load and Tilting Moments – Reinforced Bearings

	z_2	F_{2ax100}	$F_{2rad100}$	$F_{2rad,acc}$	M_{2K100}	$M_{2K,acc}$	c_{2K}
	Distance of Shaft Shoulder to Center of Output Bearing	Permitted Axial Force	Permitted Radial Force ≤100RPM	Radial Acceleration Force	Permitted Tilting Torque ≤100RPM	Permitted Acceleration Tilting Torque	Tilting Stiffness
Size	mm	N	N	N	Nm	Nm	Nm/arcmin
5	104.0	5000	5500	5500	572	572	478

PHK Series Load/Life/Speed Calculations

The permissible load and tilting moment values are based on an output speed of 100 RPM. For higher speeds the following applies, where n_2 is the desired speed:

$$F_{2radN} = \frac{F_{2rad100}}{\sqrt[3]{\frac{n_{2m*}}{100rpm}}} \qquad F_{2AX} = \frac{F_{2ax100}}{\sqrt[3]{\frac{n_2}{100}}} \qquad M_{2KX} = \frac{M_{2K100}}{\sqrt[3]{\frac{n_2}{100}}}$$

The application output tilting moment should be determined by the following formula:

$$M_{2k,acc*} = \frac{2 \bullet F_{2ax100*} \bullet y_2 + F_{2rad,acc*} \bullet (x_2 + Z_2)}{1000} \leq M_{2k,acc}$$

$$M_{2k,eq*} = \sqrt[3]{\frac{n_{2b1} \bullet t_{b1} \bullet M_{2kb1}{}^3 + \ldots + n_{2bn} \bullet t_{bn} \bullet M_{2kbn}{}^3}{n_{2b1} \bullet t_{b1} + \ldots + n_{2bn} \bullet t_{bn}}} \leq M_{2kN}$$

$$F_{2rad,eq*} = \sqrt[3]{\frac{n_{2b1} \bullet t_{b1} \bullet F_{2rb1}{}^3 + \ldots + n_{2bn} \bullet t_{bn} \bullet F_{2rbn}{}^3}{n_{2b1} \bullet t_{b1} + \ldots + n_{2bn} \bullet t_{bn}}} \leq F_{2radN}$$

Where:

z_2	Distance of Shaft Shoulder to Center of Output Bearing
n_2	Actual Average Output Speed
x_2	Distance of the Shaft Shoulder to the Force Application Point
y_2	Distance of the Shaft Axis to the Axial Force Application Point
F_{2ax*}	Actual Axial Force at Gear Unit Output
F_{2ax100}	Permitted Axial Force
$F_{2rad100}$	Permitted Radial Force ≤100RPM
$F_{2rad,acc}$	Radial Acceleration Force
$F_{2rad,acc*}$	Radial Acceleration Force at Gear Unit Output
M_{2K100}	Permitted Tilting Torque ≤100RPM
$M_{2K,acc}$	Permitted Acceleration Tilting Torque
$M_{2k,acc*}$	Permitted Acceleration Tilting Torque at Gear Unit Output
c_{2K}	Tilting Stiffness

All formulas shown are based on METRIC values

Upper case letters are permissible values. Lower case letters are for existing values.

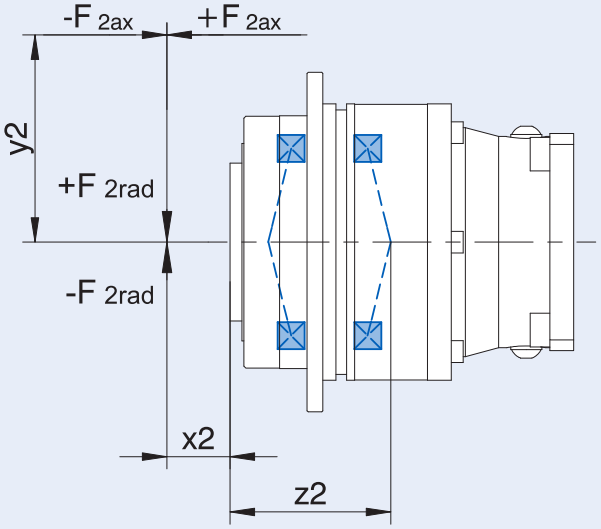

The hours of life (L_h) of the unit can be determined by the following formula:

bearing life for duty cycle ≤ 40%

L_h > 10,000 hours if M_{2K100}/M_{2A*} < 1.25 and > 1
L_h > 20,000 hours if M_{2K100}/M_{2A*} > 1.25 and > 1.5
L_h > 30,000 hours if M_{2K100}/M_{2A*} < 1.5

bearing life for duty cycle ≥ 40%

$$L_{hA} = L_h \left(\frac{40\%}{\text{Duty Cycle}}\right)$$

Reducer Ratio (i)		Output Torque				Back-lash/ Red $\Delta\phi_2$	Part Number* (Gearhead + Input)	Max. Input Speed RPM (n1)			Motor Shaft [3] Max Ø d_{MW}	Input Inertia J_1	Tors. Stiffness C_2
		Nom. [1] M_{2N}	Accel. M_{2acc}	M2 accHT	Peak [2] M_{2NOT}			Continuous		Cyclic			
Nom.	Exact	Nm	Nm	Nm	Nm	arcmin		EL 1,2	EL 3,4,5,6	All	mm	kgcm²	Nm/ arcmin
PH5K													
16.00	16/1	210	355	358	485	4.5/2.5	PH531_0040K102_0040 ME10	3300	2800	5000	≤19	1.6	50
							PH531_0040K102_0040 ME20				≤24	3.5	51
20.00	20/1	220	385	400	607	4.0/2.0	PH531_0050K102_0040 ME10	3300	2800	5000	≤19	1.6	60
							PH531_0050K102_0040 ME20				≤24	3.5	61
27.84	7600/273	220	385	400	705	4.0/2.0	PH531_0050K102_0056 ME10	3300	2800	5000	≤19	1.3	61
							PH531_0050K102_0056 ME20				≤24	3.2	
30.00	30/1	220	385	400	705	4.0/2.0	PH531_0050K102_0060 ME10	3300	2800	5000	≤19	1.1	61
							PH531_0050K102_0060 ME20				≤24	3.0	
33.22	299/9	220	385	400	705	4.0/2.0	PH531_0050K102_0066 ME10	3600	3300	5500	≤19	1.1	61
							PH531_0050K102_0066 ME20				≤24	3.0	
41.55	1911/46	220	385	400	705	4.0/2.0	PH531_0050K102_0083 ME10	3600	3300	5500	≤19	0.93	61
							PH531_0050K102_0083 ME20				≤24	2.8	62
46.25	8740/189	220	385	400	705	4.0/2.0	PH531_0050K102_0092 ME10	3600	3300	5500	≤19	0.97	61
							PH531_0050K102_0092 ME20				≤24	2.9	62
57.83	1330/23	220	385	400	705	4.0/2.0	PH531_0050K102_0115 ME10	3600	3300	5500	≤19	0.88	62
							PH531_0050K102_0115 ME20				≤24	2.8	
70.57	494/7	220	385	400	705	4.0/2.0	PH531_0050K102_0140 ME10	4000	3800	6000	≤19	0.82	62
							PH531_0050K102_0140 ME20	3700	3700		≤24	2.7	
87.82	10450/119	220	385	400	705	4.0/2.0	PH531_0050K102_0175 ME10	4000	3800	6000	≤19	0.77	62
							PH531_0050K102_0175 ME20	3700	3700		≤24	2.7	
116.3	5700/49	220	385	400	705	4.0/2.0	PH531_0050K102_0230 ME10	4000	4000	7000	≤19	0.72	62
							PH531_0050K102_0230 ME20	3700	3700	6000	≤24	2.6	
140.2	2945/21	220	385	400	705	4.0/2.0	PH531_0050K102_0280 ME10	4000	4000	7000	≤19	0.70	62
							PH531_0050K102_0280 ME20	3700	3700	6000	≤24	2.6	
175.5	3686/21	220	385	400	705	4.0/2.0	PH531_0050K102_0350 ME10	4000	4000	7000	≤19	0.68	62
							PH531_0050K102_0350 ME20	3700	3700	6000	≤24	2.6	
234.6	11,495/49	220	385	400	705	4.0/2.0	PH531_0050K102_0470 ME10	4000	4000	7000	≤19	0.63	62
280.5	5890/21	220	385	400	705	4.0/2.0	PH531_0050K102_0560 ME10	4000	4000	7000	≤19	0.62	62

[1] *Based on input speed of 1500 RPM. See page <?>.for details on torque calculations.*
[2] *Maximum momentary torque for emergency stops or heavy shock load. (Admissible stops per life of gearhead = 1,000 stops maximum.)*
* *Motor shaft adapter code (shaft diameter max - mm): ME10 (19), ME20 (32), ME30 (38), ME40 (48), ME50 (60)*

Selection Data

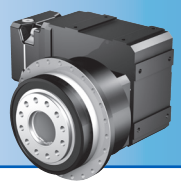

Reducer Ratio (i)		Output Torque				Back-lash/ Red $\Delta\phi_2$	Part Number* (Gearhead + Input)	Max. Input Speed RPM (n1)			Motor Shaft [3] Max Ø d_{MW}	Input Inertia J_1	Tors. Stiffness C_2
		Nom. [1] M_{2N}	Accel. M_{2acc}	M2 accHT	Peak [2] M_{2NOT}			Continuous		Cyclic			
Nom.	Exact	Nm	Nm	Nm	Nm	arcmin		EL 1,2	EL 3,4,5,6	All	mm	kgcm²	Nm/ arcmin
PH7K		**(continued next page)**											
16.00	16/1	440	670	670	1212	4.5/2.5	PH731_0040K202_0040 ME20	3000	2600	4500	≤32	6.8	99
							PH731_0040K202_0040 ME30				≤38	12	
20.00	20/1	440	838	838	1516	4.0/2.0	PH731_0050K202_0040 ME20	3000	2600	4500	≤32	6.6	116
							PH731_0050K202_0040 ME30				≤38	12	
25.89	10,535/407	440	882	913	1720	4.0/2.0	PH731_0050K202_0052 ME20	3000	2600	4500	≤32	5.8	116
							PH731_0050K202_0052 ME30				≤38	11	
28.00	28/1	438	626	626	849	4.0/2.0	PH731_0070K102_0040 ME10	3300	2800	5000	≤19	1.6	108
							PH731_0070K102_0040 ME20				≤24	3.5	109
30.00	30/1	440	670	670	909	4.0/2.0	PH731_0050K202_0060 ME10	3000	2600	4500	≤19	2.4	114
			882	924	1720		PH731_0050K202_0060 ME20				≤32	5.8	116
							PH731_0050K202_0060 ME30				≤38	11	
33.42	11,395/341	440	747	747	1013	4.0/2.0	PH731_0050K202_0067 ME10	3500	3100	5000	≤19	1.8	115
			882	924	1720		PH731_0050K202_0067 ME20				≤32	5.2	116
							PH731_0050K202_0067 ME30				≤38	11	117
38.98	1520/39	440	733	733	1182	4.0/2.0	PH731_0070K102_0056 ME10	3300	2800	5000	≤19	1.3	109
							PH731_0070K102_0056 ME20				≤24	3.2	110
40.00	40/1	350	575	575	1150	3.5/1.5	PH731_0100K102_0040 ME10	3300	2800	5000	≤19	1.5	104
							PH731_0100K102_0040 ME20				≤24	3.4	105
41.99	12,470/297	440	882	924	1273	4.0/2.0	PH731_0050K202_0084 ME10	3500	3100	5000	≤19	1.4	116
					1720		PH731_0050K202_0084 ME20				≤32	4.8	117
							PH731_0050K202_0084 ME30				≤38	10	
42.00	42/1	440	752	752	1273	4.0/2.0	PH731_0070K102_0060 ME10	3300	2800	5000	≤19	1.1	110
							PH731_0070K102_0060 ME20				≤24	3.0	
45.95	11,395/248	440	882	924	1393	4.0/2.0	PH731_0050K202_0092 ME10	3500	3100	5000	≤19	1.6	116
					1720		PH731_0050K202_0092 ME20				≤32	5.0	117
							PH731_0050K202_0092 ME30				≤38	10	
46.51	2093/45	440	778	778	1410	4.0/2.0	PH731_0070K102_0066 ME10	3600	3300	5500	≤19	1.1	110
							PH731_0070K102_0066 ME20				≤24	3.0	
55.68	15,200/273	350	575	575	1150	3.5/1.5	PH731_0100K102_0056 ME10	3300	2800	5000	≤19	1.3	105
							PH731_0100K102_0056 ME20				≤24	3.2	
57.73	6235/108	440	882	924	1720	4.0/2.0	PH731_0050K202_0115 ME10	3500	3100	5000	≤19	1.3	116
							PH731_0050K202_0115 ME20				≤32	4.7	117
							PH731_0050K202_0115 ME30				≤38	10	

[1] Based on input speed of 1500 RPM. See page <?>.for details on torque calculations.
[2] Maximum momentary torque for emergency stops or heavy shock load. (Admissible stops per life of gearhead = 1,000 stops maximum.)
** Motor shaft adapter code (shaft diameter max - mm): ME10 (19), ME20 (32), ME30 (38), ME40 (48), ME50 (60)*

Reducer Ratio (i)		Output Torque				Back-lash/ Red	Part Number* (Gearhead + Input)	Max. Input Speed RPM (n1)			Motor Shaft [3] Max Ø	Input Inertia	Tors. Stiffness
		Nom. [1]	Accel.	M2 accHT	Peak [2]			Continuous		Cyclic			
Nom.	Exact	M_{2N}	M_{2acc}		M_{2NOT}	$\Delta\phi_2$		EL 1,2	EL 3,4,5,6	All	d_{MW}	J_1	C_2
		Nm	Nm	Nm	Nm	arcmin					mm	kgcm²	Nm/ arcmin
PH7K		**(continued next page)**											
58.16	13,377/230	440	838	838	1545	4.0/2.0	PH731_0070K102_0083 ME10	3600	3300	5500	≤19	0.94	110
							PH731_0070K102_0083 ME20				≤24	2.8	
60.00	60/1	350	575	575	1150	3.5/1.5	PH731_0100K102_0060 ME10	3300	2800	5000	≤19	1.1	105
							PH731_0100K102_0060 ME20				≤24	3.0	
64.74	1748/27	440	868	868	1545	4.0/2.0	PH731_0070K102_0092 ME10	3600	3300	5500	≤19	0.98	110
							PH731_0070K102_0092 ME20				≤24	2.9	
66.44	598/9	350	575	575	1150	3.5/1.5	PH731_0100K102_0066 ME10	3600	3300	5500	≤19	1.1	105
							PH731_0100K102_0066 ME20				≤24	2.9	
69.26	14,405/208	440	882	924	1720	4.0/2.0	PH731_0050K202_0140 ME10	3900	3500	5500	≤19	1.1	116
							PH731_0050K202_0140 ME20	3700			≤32	4.6	117
							PH731_0050K202_0140 ME30	3500		5000	≤38	9.9	
70.98	3549/50	440	840	840	1545	4.0/2.0	PH731_0070K102_0100 ME10	4000	3800	6000	≤19	0.86	110
							PH731_0070K102_0100 ME20	3700	3700		≤24	2.8	
80.96	1862/23	440	869	869	1545	4.0/2.0	PH731_0070K102_0115 ME10	3600	3300	5500	≤19	0.88	110
							PH731_0070K102_0115 ME20				≤24	2.8	111
83.09	1911/23	350	575	575	1150	3.5/1.5	PH731_0100K102_0083 ME10	3600	3300	5500	≤19	0.93	105
							PH731_0100K102_0083 ME20				≤24	2.8	
87.35	2795/32	440	882	924	1720	4.0/2.0	PH731_0050K202_0175 ME10	3900	3500	5500	≤19	1.0	117
							PH731_0050K202_0175 ME20	3700			≤32	4.4	
							PH731_0050K202_0175 ME30	3500		5000	≤38	9.7	
88.33	3003/34	440	840	840	1545	4.0/2.0	PH731_0070K102_0125 ME10	4000	3800	6000	≤19	0.79	110
							PH731_0070K102_0125 ME20	3700	3700		≤24	2.7	111
92.49	17,480/189	350	575	575	1150	3.5/1.5	PH731_0100K102_0092 ME10	3600	3300	5500	≤19	0.97	105
							PH731_0100K102_0092 ME20				≤24	2.9	
98.80	494/5	440	869	869	1545	4.0/2.0	PH731_0070K102_0140 ME10	4000	3800	6000	≤19	0.82	110
							PH731_0070K102_0140 ME20	3700	3700		≤24	2.7	111
115.7	2660/23	350	575	575	1150	3.5/1.5	PH731_0100K102_0115 ME10	3600	3300	5500	≤19	0.88	105
							PH731_0100K102_0115 ME20				≤24	2.8	
115.9	14,835/128	440	882	924	1720	4.0/2.0	PH731_0050K202_0230 ME10	4000	3900	6500	≤19	0.87	117
							PH731_0050K202_0230 ME20	3700	3700	6000	≤32	4.3	
							PH731_0050K202_0230 ME30	3500	3500	5000	≤38	9.6	
117.0	117/1	440	840	840	1545	4.0/2.0	PH731_0070K102_0165 ME10	4000	4000	7000	≤19	0.74	110
							PH731_0070K102_0165 ME20	3700	3700	6000	≤24	2.6	111

[1] *Based on input speed of 1500 RPM. See page <?>.for details on torque calculations.*
[2] *Maximum momentary torque for emergency stops or heavy shock load. (Admissible stops per life of gearhead = 1,000 stops maximum.)*
* *Motor shaft adapter code (shaft diameter max - mm): ME10 (19), ME20 (32), ME30 (38), ME40 (48), ME50 (60)*

Selection Data

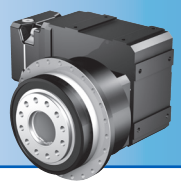

Reducer Ratio (i)		Output Torque				Back-lash/ Red $\Delta\phi_2$	Part Number* (Gearhead + Input)	Max. Input Speed RPM (n1)			Motor Shaft [3] Max Ø d_{MW}	Input Inertia J_1	Tors. Stiffness C_2
		Nom. [1] M_{2N}	Accel. M_{2acc}	M2 accHT	Peak [2] M_{2NOT}			Continuous		Cyclic			
Nom.	Exact	Nm	Nm	Nm	Nm	arcmin		EL 1,2	EL 3,4,5,6	All	mm	kgcm²	Nm/ arcmin
PH7K		**(continued from previous page)**											
122.9	2090/17	440	869	869	1545	4.0/2.0	PH731_0070K102_0175 ME10	4000	3800	6000	≤19	0.77	111
							PH731_0070K102_0175 ME20	3700	3700		≤24	2.7	
139.8	559/4	440	882	924	1720	4.0/2.0	PH731_0050K202_0280 ME10	4000	3900	6500	≤19	0.81	117
							PH731_0050K202_0280 ME20	3700	3700	6000	≤24	2.7	
141.1	2821/20	440	840	840	1545	4.0/2.0	PH731_0070K102_0200 ME10	4000	4000	7000	≤19	0.71	111
							PH731_0070K102_0200 ME20	3700	3700	6000	≤24	2.6	
162.9	1140/7	440	869	869	1545	4.0/2.0	PH731_0070K102_0230 ME10	4000	4000	7000	≤19	0.72	111
							PH731_0070K102_0230 ME20	3700	3700	6000	≤24	2.6	
172.8	9675/56	440	882	924	1720	4.0/2.0	PH731_0050K202_0350 ME10	4000	3900	6500	≤19	0.76	117
							PH731_0050K202_0350 ME20	3700	3700	6000	≤24	2.7	
176.5	8827/50	440	774	774	1401	4.0/2.0	PH731_0070K102_0250 ME10	4000	4000	7000	≤19	0.68	111
							PH731_0070K102_0250 ME20	3700	3700	6000	≤24	2.6	
196.3	589/3	440	869	869	1545	4.0/2.0	PH731_0070K102_0280 ME10	4000	4000	7000	≤19	0.70	111
							PH731_0070K102_0280 ME20	3700	3700	6000	≤24	2.6	
231.1	1849/8	440	882	924	1720	4.0/2.0	PH731_0050K202_0460 ME10	4000	3900	6500	≤19	0.71	117
							PH731_0050K202_0460 ME20	3700	3700	6000	≤24	2.6	
232.7	11,400/49	350	575	575	1150	3.5/1.5	PH731_0100K102_0230 ME10	4000	4000	7000	≤19	0.72	105
							PH731_0100K102_0230 ME20	3700	3700	6000	≤24	2.6	
235.9	4719/20	440	589	589	1064	4.0/2.0	PH731_0070K102_0340 ME10	4000	4000	7000	≤19	0.63	111
245.7	3686/15	440	869	869	1545	4.0/2.0	PH731_0070K102_0350 ME10	4000	4000	7000	≤19	0.68	111
							PH731_0070K102_0350 ME20	3700	3700	6000	≤24	2.6	
277.7	6665/24	440	882	915	1407	4.0/2.0	PH731_0050K202_0560 ME10	4000	3900	6500	≤19	0.66	117
280.5	5890/21	350	575	575	1150	3.5/1.5	PH731_0100K102_0280 ME10	4000	4000	7000	≤19	0.70	105
							PH731_0100K102_0280 ME20	3700	3700	6000	≤24	2.6	
282.1	2821/10	413	496	496	896	4.0/2.0	PH731_0070K102_0400 ME10	4000	4000	7000	≤19	0.62	111
328.4	2299/7	440	819	819	1482	4.0/2.0	PH731_0070K102_0470 ME10	4000	4000	7000	≤19	0.63	111
351.1	7372/21	350	575	575	1150	3.5/1.5	PH731_0100K102_0350 ME10	4000	4000	7000	≤19	0.68	105
							PH731_0100K102_0350 ME20	3700	3700	6000	≤24	2.6	
352.2	35,217/100	336	403	403	728	4.0/2.0	PH731_0070K102_0500 ME10	4000	4000	7000	≤19	0.62	111
392.7	1178/3	440	690	690	1248	4.0/2.0	PH731_0070K102_0560 ME10	4000	4000	7000	≤19	0.62	111
469.2	22,990/49	350	575	575	1150	3.5/1.5	PH731_0100K102_0470 ME10	4000	4000	7000	≤19	0.63	105
490.2	2451/5	440	561	561	1014	4.0/2.0	PH731_0070K102_0700 ME10	4000	4000	7000	≤19	0.62	111
561.0	11,780/21	350	575	575	1150	3.5/1.5	PH731_0100K102_0560 ME10	4000	4000	7000	≤19	0.62	105

[1] *Based on input speed of 1500 RPM. See page <?>.for details on torque calculations.*
[2] *Maximum momentary torque for emergency stops or heavy shock load. (Admissible stops per life of gearhead = 1,000 stops maximum.)*
* *Motor shaft adapter code (shaft diameter max - mm): ME10 (19), ME20 (32), ME30 (38), ME40 (48), ME50 (60)*

Reducer Ratio (i)		Output Torque				Back-lash/ Red	Part Number* (Gearhead + Input)	Max. Input Speed RPM (n1)			Motor Shaft [3] Max Ø	Input Inertia	Tors. Stiffness
		Nom. [1]	Accel.	M2 accHT	Peak [2]			Continuous		Cyclic			
		M_{2N}	M_{2acc}		M_{2NOT}	$\Delta\phi_2$		EL 1,2	EL 3,4,5,6	All	d_{MW}	J_1	C_2
Nom.	Exact	Nm	Nm	Nm	Nm	arcmin					mm	kgcm²	Nm/ arcmin
PH8K		**(continued next page)**											
16.00	16/1	782	894	894	1212	4.0/2.0	PH831_0040K302_0040 ME20	2700	2300	4000	≤32	11	180
			1174	1174	2917		PH831_0040K302_0040 ME30				≤38	16	183
20.00	20/1	978	1117	1117	1516	4.0/2.0	PH831_0050K302_0040 ME20	2700	2300	4000	≤32	10	239
			1467	1467	3646		PH831_0050K302_0040 ME30				≤38	15	243
26.88	215/8	1079	1502	1502	2037	4.0/2.0	PH831_0050K302_0054 ME20	2700	2300	4000	≤32	7.8	242
							PH831_0050K302_0054 ME30				≤38	13	243
28.00	28/1	782	1173	1173	2122	3.5/1.5	PH831_0070K202_0040 ME20	3000	2600	4500	≤32	7.0	242
							PH831_0070K202_0040 ME30				≤38	12	243
30.00	30/1	1100	1676	1676	2273	4.0/2.0	PH831_0050K302_0060 ME20	2700	2300	4000	≤32	8.0	242
			1679	1679	3646		PH831_0050K302_0060 ME30				≤38	13	244
30.55	336/11	683	683	683	926	3.5/1.5	PH831_0070K202_0044 ME10	3000	2600	4500	≤19	3.2	235
		805	1207	1207	2315		PH831_0070K202_0044 ME20				≤32	6.6	243
							PH831_0070K202_0044 ME30				≤38	12	244
36.24	14,749/407	852	1278	1278	2746	3.5/1.5	PH831_0070K202_0052 ME20	3000	2600	4500	≤32	6.0	243
							PH831_0070K202_0052 ME30				≤38	11	244
36.96	2365/64	1100	1800	1800	2801	4.0/2.0	PH831_0050K302_0074 ME20	2700	2300	4000	≤32	7.0	243
							PH831_0050K302_0074 ME30				≤38	12	244
40.00	40/1	850	1392	1392	2784	3.5/1.5	PH831_0100K202_0040 ME20	3000	2600	4500	≤32	6.7	259
							PH831_0100K202_0040 ME30				≤38	12	
42.00	42/1	895	939	939	1273	3.5/1.5	PH831_0070K202_0060 ME10	3000	2600	4500	≤19	2.6	240
			1342	1342	2917		PH831_0070K202_0060 ME20				≤32	6.0	244
							PH831_0070K202_0060 ME30				≤38	11	
46.34	5375/116	1100	1848	1848	3512	4.0/2.0	PH831_0050K302_0093 ME20	3200	2800	4500	≤32	6.1	244
							PH831_0050K302_0093 ME30				≤38	11	
46.78	15,953/341	910	1046	1046	1419	3.5/1.5	PH831_0070K202_0067 ME10	3500	3100	5000	≤19	1.9	241
		928	1391	1391	2917		PH831_0070K202_0067 ME20				≤32	5.3	244
							PH831_0070K202_0067 ME30				≤38	11	245
49.83	14,749/296	947	1421	1421	2917	3.5/1.5	PH831_0070K202_0071 ME20	3000	2600	4500	≤32	5.6	244
							PH831_0070K202_0071 ME30				≤38	11	245
51.77	21,070/407	850	1392	1392	2784	3.5/1.5	PH831_0100K202_0052 ME20	3000	2600	4500	≤32	5.8	259
							PH831_0100K202_0052 ME30				≤38	11	260

[1] *Based on input speed of 1500 RPM. See page <?>.for details on torque calculations.*
[2] *Maximum momentary torque for emergency stops or heavy shock load. (Admissible stops per life of gearhead = 1,000 stops maximum.)*
* *Motor shaft adapter code (shaft diameter max - mm): ME10 (19), ME20 (32), ME30 (38), ME40 (48), ME50 (60)*

Selection Data

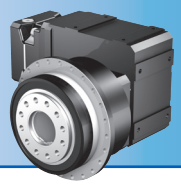

Reducer Ratio (i)		Output Torque				Back-lash/ Red $\Delta\phi_2$	Part Number* (Gearhead + Input)	Max. Input Speed RPM (n1)			Motor Shaft [3] Max Ø d_{MW}	Input Inertia J_1	Tors. Stiffness C_2
		Nom. [1] M_{2N}	Accel. M_{2acc}	M2 accHT	Peak [2] M_{2NOT}			Continuous		Cyclic			
Nom.	Exact	Nm	Nm	Nm	Nm	arcmin		EL 1,2	EL 3,4,5,6	All	mm	kgcm²	Nm/ arcmin
PH8K	**(continued next page)**												
58.05	1161/20	1100	1298	1298	1760	4.0/2.0	PH831_0050K302_0115 ME10	3200	2800	4500	≤19	2.1	242
			1848	1848	3646		PH831_0050K302_0115 ME20				≤32	5.5	244
							PH831_0050K302_0115 ME30				≤38	11	245
58.78	17,458/297	1000	1314	1314	1782	3.5/1.5	PH831_0070K202_0084 ME10	3500	3100	5000	≤19	1.5	242
			1478	1478	2917		PH831_0070K202_0084 ME20				≤32	4.9	245
							PH831_0070K202_0084 ME30				≤38	10	
60.00	60/1	850	1341	1341	1819	3.5/1.5	PH831_0100K202_0060 ME10	3000	2600	4500	≤19	2.4	257
			1392	1392	2784		PH831_0100K202_0060 ME20				≤32	5.8	259
							PH831_0100K202_0060 ME30				≤38	11	260
64.33	15,953/248	1000	1438	1438	1951	3.5/1.5	PH831_0070K202_0092 ME10	3500	3100	5000	≤19	1.7	243
			1478	1478	2917		PH831_0070K202_0092 ME20				≤32	5.1	245
							PH831_0070K202_0092 ME30				≤38	10	
66.83	22,790/341	850	1392	1392	2027	3.5/1.5	PH831_0100K202_0067 ME10	3500	3100	5000	≤19	1.8	258
					2784		PH831_0100K202_0067 ME20				≤32	5.2	260
							PH831_0100K202_0067 ME30				≤38	11	
69.68	7525/108	1100	1558	1558	2113	4.0/2.0	PH831_0050K302_0140 ME10	3500	3100	5000	≤19	1.7	243
			1848	1848	3646		PH831_0050K302_0140 ME20				≤32	5.1	244
							PH831_0050K302_0140 ME30				≤38	10	245
70.51	20,167/286	1000	1478	1478	2137	3.5/1.5	PH831_0070K202_0100 ME10	3900	3500	5500	≤19	1.3	243
					2917		PH831_0070K202_0100 ME20	3700			≤32	4.7	245
							PH831_0070K202_0100 ME30	3500		5000	≤38	10	
80.82	8729/108	1000	1478	1478	2450	3.5/1.5	PH831_0070K202_0115 ME10	3500	3100	5000	≤19	1.4	244
					2917		PH831_0070K202_0115 ME20				≤32	4.8	245
							PH831_0070K202_0115 ME30				≤38	10	
83.97	24,940/297	850	1392	1392	2546	3.5/1.5	PH831_0100K202_0084 ME10	3500	3100	5000	≤19	1.5	259
					2784		PH831_0100K202_0084 ME20				≤32	4.9	260
							PH831_0100K202_0084 ME30				≤38	10	
86.47	7955/92	1100	1848	1848	2621	4.0/2.0	PH831_0050K302_0175 ME10	3500	3100	5000	≤19	1.4	244
					3646		PH831_0050K302_0175 ME20				≤32	4.8	245
							PH831_0050K302_0175 ME30				≤38	10	
88.94	3913/44	1000	1478	1478	2696	3.5/1.5	PH831_0070K202_0125 ME10	3900	3500	5500	≤19	1.1	244
					2917		PH831_0070K202_0125 ME20	3700			≤32	4.5	245
							PH831_0070K202_0125 ME30	3500		5000	≤38	9.8	

[1] *Based on input speed of 1500 RPM. See page <?>.for details on torque calculations.*
[2] *Maximum momentary torque for emergency stops or heavy shock load. (Admissible stops per life of gearhead = 1,000 stops maximum.)*
* *Motor shaft adapter code (shaft diameter max - mm): ME10 (19), ME20 (32), ME30 (38), ME40 (48), ME50 (60)*

Reducer Ratio (i)		Output Torque				Back-lash/ Red	Part Number* (Gearhead + Input)	Max. Input Speed RPM (n1)			Motor Shaft [3] Max Ø	Input Inertia	Tors. Stiffness
		Nom. [1]	Accel.	M2 accHT	Peak [2]			Continuous		Cyclic			
Nom.	Exact	M_{2N}	M_{2acc}		M_{2NOT}	$\Delta\phi_2$		EL 1,2	EL 3,4,5,6	All	d_{MW}	J_1	C_2
		Nm	Nm	Nm	Nm	arcmin					mm	kgcm²	Nm/ arcmin
PH8K		**(continued next page)**											
91.90	11395/124	850	1392	1392	2784	3.5/1.5	PH831_0100K202_0092 ME10	3500	3100	5000	≤19	1.6	259
							PH831_0100K202_0092 ME20				≤32	5.0	260
							PH831_0100K202_0092 ME30				≤38	10	
96.96	20,167/208	1000	1478	1478	2917	3.5/1.5	PH831_0070K202_0140 ME10	3900	3500	5500	≤19	1.2	244
							PH831_0070K202_0140 ME20	3700			≤32	4.6	245
							PH831_0070K202_0140 ME30	3500		5000	≤38	9.9	
115.5	6235/54	850	1392	1392	2784	3.5/1.5	PH831_0100K202_0115 ME10	3500	3100	5000	≤19	1.3	259
							PH831_0100K202_0115 ME20				≤32	4.7	260
							PH831_0100K202_0115 ME30				≤38	10	
116.5	2795/24	1100	1848	1848	3358	4.0/2.0	PH831_0050K302_0230 ME10	3800	3500	6000	≤19	1.1	244
					3646		PH831_0050K302_0230 ME20	3700			≤32	4.5	245
							PH831_0050K302_0230 ME30	3500		5000	≤38	9.9	
118.0	20,769/176	1000	1478	1478	2917	3.5/1.5	PH831_0070K202_0170 ME10	4000	3900	6500	≤19	0.92	245
							PH831_0070K202_0170 ME20	3700	3700	6000	≤32	4.3	
							PH831_0070K202_0170 ME30	3500	3500	5000	≤38	9.6	
122.3	3913/32	1000	1478	1478	2917	3.5/1.5	PH831_0070K202_0175 ME10	3900	3500	5500	≤19	1.0	245
							PH831_0070K202_0175 ME20	3700			≤32	4.4	
							PH831_0070K202_0175 ME30	3500		5000	≤38	9.7	
138.5	14,405/104	850	1392	1392	2784	3.5/1.5	PH831_0100K202_0140 ME10	3900	3500	5500	≤19	1.2	260
							PH831_0100K202_0140 ME20	3700			≤32	4.6	
							PH831_0100K202_0140 ME30	3500		5000	≤38	9.9	
139.4	17,845/128	1100	1848	1848	3646	4.0/2.0	PH831_0050K302_0280 ME10	3800	3500	6000	≤19	1.0	244
							PH831_0050K302_0280 ME20	3700			≤32	4.4	245
							PH831_0050K302_0280 ME30	3500		5000	≤38	9.7	
142.3	7826/55	1000	1478	1478	2917	3.5/1.5	PH831_0070K202_0200 ME10	4000	3900	6500	≤19	0.85	245
							PH831_0070K202_0200 ME20	3700	3700	6000	≤24	2.7	
162.3	20,769/128	1000	1478	1478	2917	3.5/1.5	PH831_0070K202_0230 ME10	4000	3900	6500	≤19	0.88	245
							PH831_0070K202_0230 ME20	3700	3700	6000	≤32	4.3	
							PH831_0070K202_0230 ME30	3500	3500	5000	≤38	9.6	
173.7	4515/26	1100	1848	1848	3646	4.0/2.0	PH831_0050K302_0350 ME10	3800	3500	6000	≤19	0.90	245
							PH831_0050K302_0350 ME20	3700			≤24	2.8	

[1] *Based on input speed of 1500 RPM. See page <?>.for details on torque calculations.*
[2] *Maximum momentary torque for emergency stops or heavy shock load. (Admissible stops per life of gearhead = 1,000 stops maximum.)*
* *Motor shaft adapter code (shaft diameter max - mm): ME10 (19), ME20 (32), ME30 (38), ME40 (48), ME50 (60)*

Selection Data

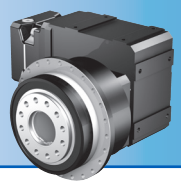

Reducer Ratio (i)		Output Torque				Back-lash/ Red	Part Number* (Gearhead + Input)	Max. Input Speed RPM (n1)			Motor Shaft [3] Max Ø	Input Inertia	Tors. Stiffness
		Nom. [1]	Accel.	M2	Peak [2]			Continuous		Cyclic			
Nom.	Exact	M_{2N}	M_{2acc}	accHT	M_{2NOT}	$\Delta\phi_2$		EL 1,2	EL 3,4,5,6	All	d_{MW}	J_1	C_2
		Nm	Nm	Nm	Nm	arcmin					mm	kgcm²	Nm/ arcmin
PH8K		**(continued from previous page)**											
174.7	2795/16	850	1392	1392	2784	3.5/1.5	PH831_0100K202_0175 ME10	3900	3500	5500	≤19	1.0	260
							PH831_0100K202_0175 ME20	3700			≤32	4.4	
							PH831_0100K202_0175 ME30	3500		5000	≤38	9.7	
175.9	1935/11	1000	1478	1478	2917	3.5/1.5	PH831_0070K202_0250 ME10	4000	3900	6500	≤19	0.78	245
							PH831_0070K202_0250 ME20	3700	3700	6000	≤24	2.7	
195.7	3913/20	1000	1478	1478	2917	3.5/1.5	PH831_0070K202_0280 ME10	4000	3900	6500	≤19	0.82	245
							PH831_0070K202_0280 ME20	3700	3700	6000	≤24	2.7	
231.1	1849/8	1100	1848	1848	3585	4.0/2.0	PH831_0050K302_0460 ME10	3800	3500	6000	≤19	0.80	245
							PH831_0050K302_0460 ME20	3700			≤24	2.7	
231.8	14,835/64	850	1392	1392	2784	3.5/1.5	PH831_0100K202_0230 ME10	4000	3900	6500	≤19	0.87	260
							PH831_0100K202_0230 ME20	3700	3700	6000	≤32	4.3	
							PH831_0100K202_0230 ME30	3500	3500	5000	≤38	9.6	
235.3	12,943/55	1000	1242	1242	2246	3.5/1.5	PH831_0070K202_0340 ME10	4000	3900	6500	≤19	0.72	245
							PH831_0070K202_0340 ME20	3700	3700	6000	≤24	2.6	
241.9	1935/8	1000	1478	1478	2917	3.5/1.5	PH831_0070K202_0350 ME10	4000	3900	6500	≤19	0.76	245
							PH831_0070K202_0350 ME20	3700	3700	6000	≤24	2.7	
278.5	12,255/44	1100	1525	1525	2757	4.0/2.0	PH831_0050K302_0560 ME10	3800	3500	6000	≤19	0.75	245
							PH831_0050K302_0560 ME20	3700			≤24	2.6	
279.5	559/2	850	1392	1392	2784	3.5/1.5	PH831_0100K202_0280 ME10	4000	3900	6500	≤19	0.81	260
							PH831_0100K202_0280 ME20	3700	3700	6000	≤24	2.7	
282.8	9331/33	776	931	931	1432	3.5/1.5	PH831_0070K202_0400 ME10	4000	3900	6500	≤19	0.67	245
323.6	12,943/40	1000	1478	1478	2917	3.5/1.5	PH831_0070K202_0460 ME10	4000	3900	6500	≤19	0.71	245
							PH831_0070K202_0460 ME20	3700	3700	6000	≤24	2.6	
345.5	9675/28	850	1392	1392	2784	3.5/1.5	PH831_0100K202_0350 ME10	4000	3900	6500	≤19	0.76	260
							PH831_0100K202_0350 ME20	3700	3700	6000	≤24	2.7	
353.4	46,655/132	647	776	776	1404	3.5/1.5	PH831_0070K202_0500 ME10	4000	3900	6500	≤19	0.65	245
388.8	9331/24	1000	1281	1281	1970	3.5/1.5	PH831_0070K202_0560 ME10	4000	3900	6500	≤19	0.66	245
462.3	1849/4	850	1392	1392	2784	3.5/1.5	PH831_0100K202_0460 ME10	4000	3900	6500	≤19	0.71	260
							PH831_0100K202_0460 ME20	3700	3700	6000	≤24	2.6	
486.0	46,655/96	889	1067	1067	1847	3.5/1.5	PH831_0070K202_0690 ME10	4000	3900	6500	≤19	0.64	245
555.4	6665/12	850	1392	1392	2784	3.5/1.5	PH831_0100K202_0560 ME10	4000	3900	6500	≤19	0.66	260

[1] *Based on input speed of 1500 RPM. See page <?>.for details on torque calculations.*
[2] *Maximum momentary torque for emergency stops or heavy shock load. (Admissible stops per life of gearhead = 1,000 stops maximum.)*
* *Motor shaft adapter code (shaft diameter max - mm): ME10 (19), ME20 (32), ME30 (38), ME40 (48), ME50 (60)*

Reducer Ratio (i)		Output Torque				Back-lash/ Red	Part Number* (Gearhead + Input)	Max. Input Speed RPM (n1)			Motor Shaft [3] Max Ø	Input Inertia	Tors. Stiffness
		Nom. [1]	Accel.	M2 accHT	Peak [2]			Continuous		Cyclic			
Nom.	Exact	M_{2N}	M_{2acc}		M_{2NOT}	$\Delta\phi_2$		EL 1,2	EL 3,4,5,6	All	d_{MW}	J_1	C_2
		Nm	Nm	Nm	Nm	arcmin					mm	kgcm²	Nm/ arcmin
PH9K													
32.54	17081/525	2758	3840	3840	6480	4.5/2.5	PH941_0040K513_0081 ME30	1900	1800	3200	≤38	25	521
							PH941_0040K513_0081 ME40				≤48	47	520
40.60	203/5	2884	3840	3840	7500	4.5/2.5	PH941_0040K513_0100 ME30	1900	1800	3200	≤38	21	522
							PH941_0040K513_0100 ME40				≤48	43	
48.80	17081/350	3000	5000	5000	9720	4.0/2.0	PH941_0060K513_0081 ME30	1900	1800	3200	≤38	24	727
							PH941_0060K513_0081 ME40				≤48	46	726
60.90	609/10	3000	5000	5000	10000	4.0/2.0	PH941_0060K513_0100 ME30	1900	1800	3200	≤38	20	728
							PH941_0060K513_0100 ME40				≤48	42	
							PH941_0060K513_0130 ME30	2300	2200	3600	≤38	17	729
							PH941_0060K513_0130 ME40				≤48	39	728
76.85	1537/20	3000	5000	5000	10000	4.0/2.0	PH941_0060K513_0130ME30	2300	2200	3600	≤38	17	729
							PH941_0060K513_0130ME40				≤48	39	728
96.56	26071/270	3000	5000	5000	7209	4.0/2.0	PH941_0060K513_0160 ME20	2300	2200	3600	≤32	9.4	728
					10000		PH941_0060K513_0160 ME30				≤38	15	729
							PH941_0060K513_0160 ME40				≤48	37	
116.1	27869/240	3000	5000	5000	8669	4.0/2.0	PH941_0060K513_0195 ME20	2800	2500	4200	≤32	8.2	728
					10000		PH941_0060K513_0195 ME30				≤38	14	729
							PH941_0060K513_0195 ME40				≤48	36	
146.1	11687/80	3000	5000	5000	10000	4.0/2.0	PH941_0060K513_0240 ME20	2800	2500	4200	≤32	7.0	729
							PH941_0060K513_0240 ME30				≤38	12	730
							PH941_0060K513_0240 ME40				≤48	34	
193.8	62031/320	3000	5000	5000	10000	4.0/2.0	PH941_0060K513_0320 ME20	3400	3000	5000	≤32	6.0	729
							PH941_0060K513_0320 ME30				≤38	11	730
							PH941_0060K513_0320 ME40			4500	≤48	33	
231.2	8091/35	3000	5000	5000	10000	4.0/2.0	PH941_0060K513_0390 ME20	3400	3000	5000	≤32	5.5	730
							PH941_0060K513_0390 ME30				≤38	11	
289.0	8091/28	3000	5000	5000	10000	4.0/2.0	PH941_0060K513_0480 ME20	3400	3000	5000	≤32	5.0	730
							PH941_0060K513_0480 ME30				≤38	10	
387.3	25172/65	3000	5000	5000	10000	4.0/2.0	PH941_0060K513_0650 ME20	3400	3000	5000	≤32	4.7	730
							PH941_0060K513_0650 ME30				≤38	10	
465.6	26071/56	3000	5000	5000	8724	4.0/2.0	PH941_0060K513_0780 ME20	3400	3000	5000	≤24	3.0	730

[1] *Based on input speed of 1500 RPM. See page <?>.for details on torque calculations.*
[2] *Maximum momentary torque for emergency stops or heavy shock load. (Admissible stops per life of gearhead = 1,000 stops maximum.)*
* *Motor shaft adapter code (shaft diameter max - mm): ME10 (19), ME20 (32), ME30 (38), ME40 (48), ME50 (60)*

Selection Data

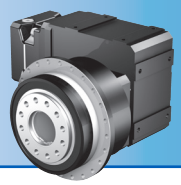

Reducer Ratio (i)		Output Torque				Back-lash/ Red $\Delta\phi_2$	Part Number* (Gearhead + Input)	Max. Input Speed RPM (n1)			Motor Shaft [3] Max Ø d_{MW}	Input Inertia J_1	Tors. Stiffness C_2
		Nom. [1] M_{2N}	Accel. M_{2acc}	M2 accHT	Peak [2] M_{2NOT}			Continuous		Cyclic			
Nom.	Exact	Nm	Nm	Nm	Nm	arcmin		EL 1,2	EL 3,4,5,6	All	mm	kgcm²	Nm/ arcmin
PH10K													
48.64	255285/5248	5000	7144	–	9689	4.0	PH1041_0060K613_0081 ME30	1800	1700	3000	≤38	37	1201
			7500		15000		PH1041_0060K613_0081 ME40				≤48	60	1202
							PH1041_0060K613_0081 ME50				≤60	88	1205
75.77	9699/128	5000	7500	–	15000	4.0	PH1041_0060K613_0125 ME30	2200	2000	3500	≤38	24	1206
							PH1041_0060K613_0125 ME40				≤48	46	
							PH1041_0060K613_0125 ME50				≤60	75	1207
95.21	54839/576	5000	7500	–	15000	4.0	PH1041_0060K613_0160 ME30	2200	2000	3500	≤38	20	1207
							PH1041_0060K613_0160 ME40				≤48	42	
							PH1041_0060K613_0160 ME50				≤60	71	1208
114.0	51057/448	5000	6273	–	8508	4.0	PH1041_0060K613_0190 ME20	2600	2300	4000	≤32	12	1205
			7500		15000		PH1041_0060K613_0190 ME30				≤38	17	1208
							PH1041_0060K613_0190 ME40				≤48	39	
							PH1041_0060K613_0190 ME50	2500			≤60	68	1209
144.0	73749/512	5000	7500	–	15000	4.0	PH1041_0060K613_0240 ME30	2600	2300	4000	≤38	15	1209
							PH1041_0060K613_0240 ME40				≤48	37	
							PH1041_0060K613_0240 ME50	2500			≤60	66	
191.1	391437/2048	5000	7500	–	12521	4.0	PH1041_0060K613_0320 ME20	3100	2800	4500	≤32	7.7	1208
					15000		PH1041_0060K613_0320 ME30				≤38	13	1209
							PH1041_0060K613_0320 ME40	3000			≤48	35	
							PH1041_0060K613_0320 ME50	2500	2500	4000	≤60	64	
229.9	470859/2048	5000	7500	–	13589	4.0	PH1041_0060K613_0380 ME20	3100	2800	4500	≤32	6.7	1209
					15000		PH1041_0060K613_0380 ME30				≤38	12	
							PH1041_0060K613_0380 ME40	3000			≤48	34	
							PH1041_0060K613_0380 ME50	2500	2500	4000	≤60	63	
286.4	119133/416	5000	7500	–	14337	4.0	PH1041_0060K613_0480 ME20	3100	2800	4500	≤32	5.9	1209
							PH1041_0060K613_0480 ME30				≤38	11	
382.3	391437/1024	5000	7500	–	15000	4.0	PH1041_0060K613_0640 ME20	3100	2800	4500	≤32	5.2	1209
							PH1041_0060K613_0640 ME30				≤38	10	1210
456.8	380091/832	5000	7500	–	15000	4.0	PH1041_0060K613_0760 ME20	3100	2800	4500	≤32	4.9	1210
							PH1041_0060K613_0760 ME30				≤38	10	

[1] *Based on input speed of 1500 RPM. See page <?>.for details on torque calculations.*
[2] *Maximum momentary torque for emergency stops or heavy shock load. (Admissible stops per life of gearhead = 1,000 stops maximum.)*
* *Motor shaft adapter code (shaft diameter max - mm): ME10 (19), ME20 (32), ME30 (38), ME40 (48), ME50 (60)*

PHK Series Dimensions — All Units

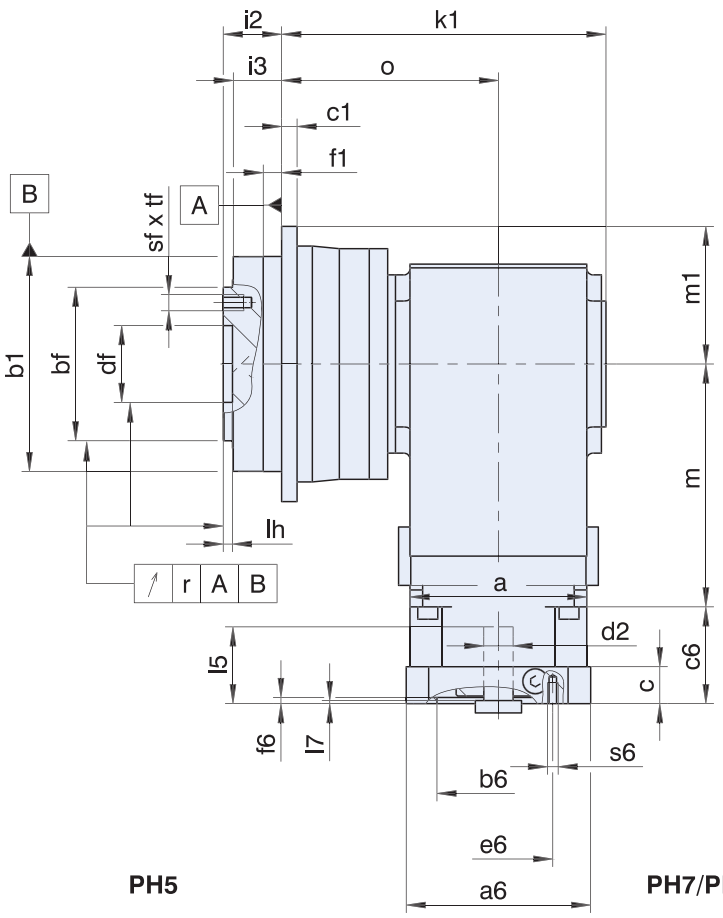

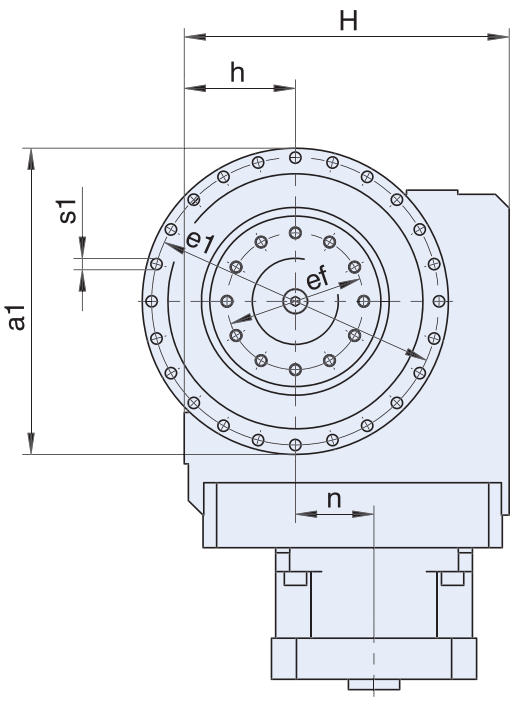

** See Motor Mounting Plate Option, page 221 for details.*

PH5

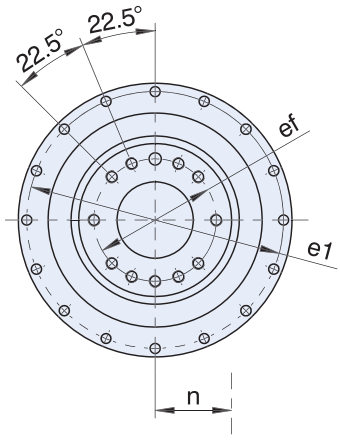

PH7/PH8

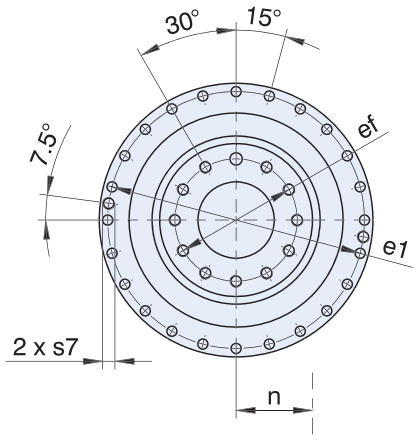

PH9/PH10

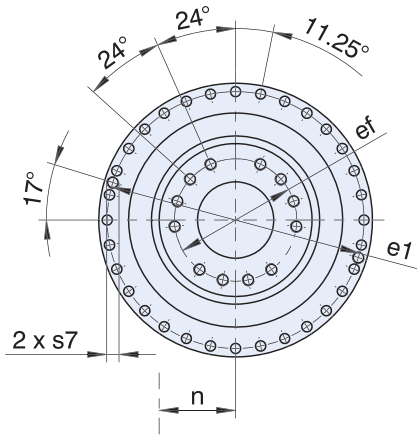

Dimensional Data

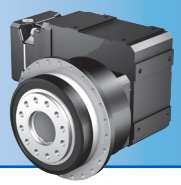

Table 1 Dimensions (mm)

Unit	Øa1	Øb1	Øbf	c1	Ødf	Øe1	Øef	f1	h	H	i2	i3	k1	lh	m1	o	r	Øs1	s7	sf	tf
PH531_K102	145^{h7}	110^{h7}	80^{h7}	8	40^{H6}	135	63	12	60	160	29	23	180.0	6	72.5	124.0	0.020	5.5	–	M6	11
PH731_K102	179^{h7}	140^{h7}	100^{h7}	10	50^{H6}	168	80	12	60	160	38	32	183.0	6	89.5	127.0	0.025	6.6	–	M8	14
PH731_K202	179^{h7}	140^{h7}	100^{h7}	10	50^{H6}	168	80	12	65	190	38	32	211.0	6	89.5	141.0	0.025	6.6	–	M8	14
PH831_K202	247^{h7}	200^{h7}	160^{h7}	12	80^{H6}	233	125	15	65	190	50	42	246.0	8	123.5	176.0	0.030	9.0	M10	M10	18
PH831_K302	247^{h7}	200^{h7}	160^{h7}	12	80^{H6}	233	125	15	75	213	50	42	259.5	8	123.5	183.5	0.030	9.0	M10	M10	18
PH941_K513	-	255^{h7}	180^{h7}	18	90^{H6}	280	140	20	160	260	66	55	292.5	12	150.0	196.5	0.030	13.5	M8	M16	24
PH1041_K613	-	285^{h7}	200^{h7}	20	95^{H6}	310	160	20	190	310	75	60	318.5	10	165.0	215.0	0.040	13.5	M10	M20	28

Motor Mounting Plate

Table 2 Dimensions (mm)

Base Module	Motor Adapter Code															Wt. lbs.
	ME10			ME20			ME30			ME40			ME50			
	a	m	n	a	m	n	a	m	n	a	m	n	a	m	n	
PH531_K102	98	124	36	115	128	36	–	–	–	–	–	–	–	–	–	43
PH731_K102	98	124	36	115	128	36	–	–	–	–	–	–	–	–	–	53
PH731_K202	98	143	46	115	147	46	145	149	46	–	–	–	–	–	–	69
PH831_K202	98	143	46	115	147	46	145	149	46	–	–	–	–	–	–	116
PH831_K302	140	163	53	115	167	53	145	169	53	–	–	–	–	–	–	134
PH941_K513	–	–	–	160	172	15	145	174	15	190	177	15	–	–	–	213
PH1041_K613	–	–	–	160	191	18	200	193	18	190	196	18	300	210	18	310

PHQK Series: RIGHT ANGLE – Flange Output

PHQK Features

- 22:1 to 591:1 ratios (higher ratios available. Contact STOBER.)
- Quiet running (<63dB(A))
- High load capacity and tilting rigidity through symmetrical bearing arrangement
- FKM seals for extended gearbox life
- Large motor input option to accept bigger diameter motor shafts so you don't use an oversized gearbox
- Error free motor mounting and quick changeover with toleranced pilot on motor plate
- Low no load running torque, giving you more torque for your application
- Magnetic oil filtration to remove contaminants to prevent breakdowns
- Build and ship in one day
- Assembled in the USA

STOBER PHQK Series combines planetary and helical gearing. The PHQK provides a more compact, precise solution, and can handle higher input speeds. Every gearbox is made to order. STOBER will custom whatever you need to fit your application. Contact us today to learn more.

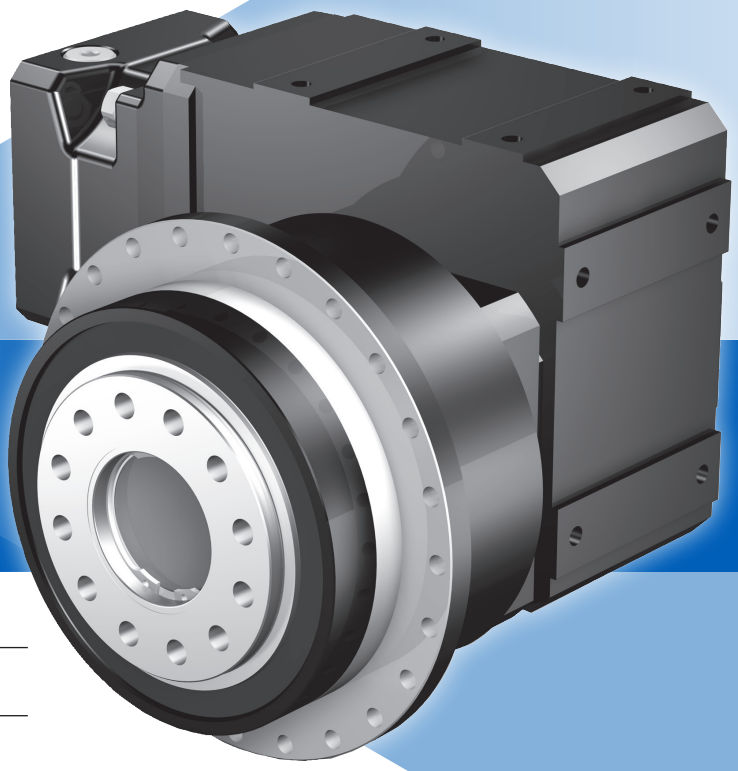

SHIPS in 1 DAY!
NO EXPEDITE FEE FOR 24 HOUR SERVICE

General Specifications

Ambient Temperature	0°C to +40°C (104°F) [Unit temperature <90°C Max]
Backlash	≤3.5 (see performance overview chart, page 238)
Coating	Standard Black (RAL-9005)
Degree of Protection	IP65
Direction of Rotation	See page 239
Efficiency	PHQK: 94%
Input RPM	Up to 6,000 RPM
Installation	Requires 12.9 fasteners. See page 288, for more information
Lubrication	Lubricated for life – standard Mobil SHC629; option food grade Mobil SHC CIBUS 150
Mounting Position	Must be specified, see page 257
Warranty	5 Year Limited (2 Years on normal wear items: bearings, seals, etc.)

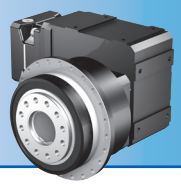

Overview

Selection Options *At-a-Glance*

Using the **Selection Data** table later in this section, select the PHKQ Series Gearhead with the appropriate performance and design options tailored to your motor choice and exact application requirements. Use the part number guide below as a reference to build a part number for the complete gearhead assembly.

Part Number Examples:

	1	2	3	4	5	6	7	8	9	0	!	@	
PHQK	PHQ	5	3	1	S	F	S	S	0030	K523VF	0040	ME10	EL1 *

	Design Option	Part Number Code	Description
1	**Series**	PHQ	Rotating flange output with Quattro power planetary
2	**Size**	5 7 8 9 10 11 12	7 sizes of gearhead
3	**Generation**	3 4	Sizes 5-8 Sizes 9-12
4	**# of Stages**	1	One stage
5	**Housing**	S	Standard mounting style
6	**Output Shaft**	F	Flange output
7	**Bearing**	S V	Standard Reinforced Bearing (Size 5 Only)
8	**Backlash**	S	Standard Backlash Reduced Backlash (Sizes 5-9 only)
9	**Ratio**	0030	Ratios range from 3:1 to 6:1 (0030=3:1)
0	**Secondary Unit**	K523VF	K Series helical/bevel unit: 6 sizes, 1, 2, 3, or 4 stages, with output shaft (V) and flange (F) please specify side 3 or side 4
!	**Secondary Unit Ratio**	0040	Ratios from 4:1 to 99:1 (0040=4:1; 0020=2:1; 0030=3:1)
@	**Motor Adapter**	ME10 - ME50 MB	Motor Adapter with EasyAdapt coupling ServoStop with motor adapter with brake (Contact factory)
*	**Mounting Position**	EL1 EL2 EL3 EL4 EL5 EL6	Required special instruction for all units, see page 257

Options

ME Adapter Option

- MSS1 Seal – special input seal for longer life (For sizes PHQ5-8). Contact factory for this option.
- Peak Torque Booster – pinion securing element for shock loads, increasing peak torque up to 80%.

Integrated Safety Brake

- ServoStop – provides dynamic braking during power failures or emergency stops in hazardous situations. Contact factory for this option.

Coating Option

- Available with multi-layer, industrial 316 stainless steel epoxy coating. Contact factory for this option.

ATEX

- ATmosphere EXplosible – rated for explosive environments. Contact factory for this option and allow additional time for delivery.

PHQK Performance Overview

PHQK Series performance is dependent on several factors including duty cycle, bearing design, gearhead size and stage configuration, among others. Use the chart below for preliminary evaluation, then use the following performance chart and selection information on the following pages for specific performance sizing and selection.

Size/Generation/# of Stages		PHQ5	PHQ7	PHQ8	PHQ9	PHQ10	PHQ11	PHQ12
Secondary Unit		K102	K202	K402	K513	K713	K813	K913/K914
Acceleration Torque M_{2BMAX}	Nm	550	1050	2800	5760	10,000	22,000	43,000
Output Torque Nom. [1] M_{2N}	Nm	280	500	1400	3800	6500	13,000	21,772
Torsional Stiffness C_2	Nm/arcmin	70	136	400	771	1560	2623	4664
Torsional Backlash [2] $\Delta\phi$	arcmin	≤4	≤4	≤3.5	≤4	≤4	≤4	≤4
Input Speed Max. n_{1MAX}	Continuous Cyclic	4000 7000	4000 6500	3600 5500	3400 5000	2900 4200	2800 4000	2600 3800
Efficiency (@nom torque)	%	93	93	93	92	92	92	92
Weight	kg lbs	17.9 39.4	32.6 71.7	74.4 163.7	96.7 212.7	164.1 361	304.5 669.9	556.2 1223.6
Noise [3]	dB(A)	≤63	≤63	≤63	≤64	≤64	≤65	≤65
Performance by Bearing Design Option [4]								
Permitted Axial Force F_{2ax100}	N	4150	6150	10,050	33,000	50,000	60,000	70,000
Permitted Tilting Torque ≤100RPM M_{2K100}	Nm	440	1466	3500	7500	8800	11,000	18,000
Performance by Reinforced Bearing Design Option – Choose V Option [4]								
Permitted Axial Force F_{2ax100}	N	5000	–	–	–	–	–	–
Permitted Tilting Torque ≤100RPM M_{2K100}	Nm	572	–	–	–	–	–	–

[1] *Ratings based on input speed (n_1) of 1500 RPM. To calculate torque at higher input speeds, contact the factory.*

[2] *Tested at 1.5% of nominal torque and recorded on the output side of the gearhead. For lower backlash, contact STOBER technical support.*

[3] *Measurement at one (1) meter distance with input speed (n_1) of 1500 RPM.*

[4] *Rating based on output speed (n_2) of 100 RPM. For values at other speeds see page 241.*



PHQK Series Direction of Rotation

For PHQK units, the “PHQ” Series planetary output unit can be mounted on either the right (Side 3) or the left (Side 4) of the “K” Series right angle secondary unit. Note CCW input direction of rotation and CW output shaft direction with both mounting configurations.

IMPORTANT: When ordering, Mounting Side 3 or Side 4 MUST BE SPECIFIED.

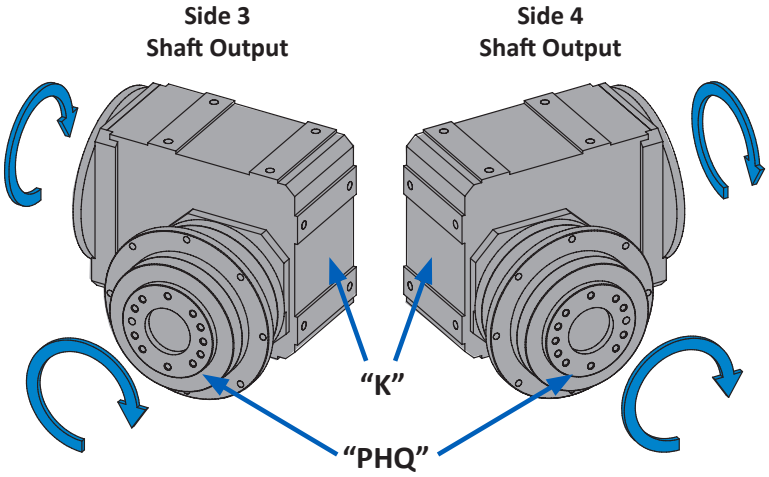

PHQK Mounting Position Options

When ordering, the mounting in position (EL1, EL2, EL3, EL4, EL5, EL6) MUST BE SPECIFIED

PHQ521_K102 PHQ721_K202 PHQ821_K402



PHQ931_K513 PHQ1031_K713 PHQ1131_K813

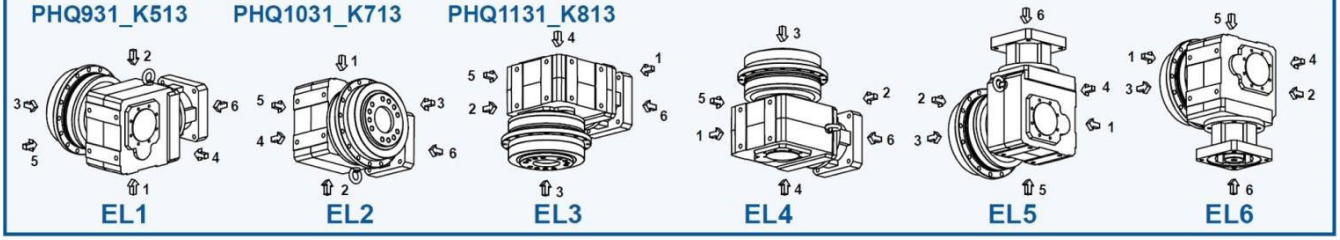

PHQK Series Motor Mounting Plate Access Hole

Access to the clamping screw for the motor coupling is located on the 270° side of the motor mounting plate at the location shown. If necessary, the motor mounting plate can be rotated in the field, if a 0°, 90° or 180° orientation for the access hole is desirable.

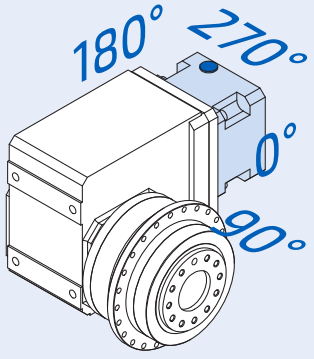

PHQK Series Motor Mounting Plate Option

STOBER Servo Gearheads fit the motor of your choice with the appropriate motor mounting plate assembled between the motor and the gearhead.

NOTE: When ordering a gearhead:

- Specify the motor manufacturer and part number
- Provide the motor drawing with dimensions, or specify the motor mounting dimensions (per the list shown at right)

For a precise dimension on a specific motor, or for general assistance, we recommend you contact STOBER Technical Support.

Customer Required Dimensions for Properly Sized Motor Mounting Plate

Motor information required with Motor Adapter

d2	Motor Shaft Diameter (If an adapter bushing is required it will be supplied with the motor plate.)
b6	Pilot Diameter
e6	Bolt Circle Diameter
s6	Bolt Diameter
l5	Motor Shaft Length
f6	Pilot Length
a6	Square Flange (Optional – motor plate will typically be made to match this dimension.)

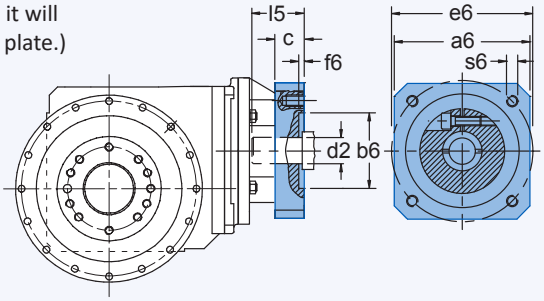

PHQK Motor Mounting Plate Dimensions — mm (Gearhead Part Number Specific)	ME10	ME20	ME30	ME40	ME50
Maximum Allowed Motor Shaft Dia.d2	19	32	38	48	60
Minimum Allowed Motor Plate Thickness c*	21	24	25	33	43

** Note that the c motor plate thickness is determined by the motor shaft length. The minimum motor plate thickness is the value listed.*

PHQX Series Permissible Motor Tilting Torque

The permissible tilting torque of the motor attached to the gear unit is a result of the static and dynamic load "F" from the motor weight, mass acceleration, and vibration multiplied by the distance from the center of gravity "l_s" of the motor.

M_{1K}	PHQK (ME Motor Adapters)				
	ME10	ME20	ME30	ME40	ME50
Nm	25	60	125	250	600

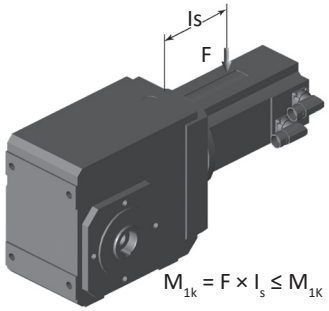

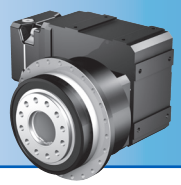

PHQK Series Permissible Output Shaft Load and Tilting Moments – Standard Bearings

Size	Z_2 Distance of Shaft Shoulder to Center of Output Bearing mm	F_{2ax100} Permitted Axial Force N	$F_{2rad100}$ Permitted Radial Force ≤100RPM N	$F_{2rad,acc}$ Radial Acceleration Force N	M_{2K100} Permitted Tilting Torque ≤100RPM Nm	$M_{2K,acc}$ Permitted Acceleration Tilting Torque Nm	C_{2K} Tilting Stiffness Nm/arcmin
5	97.0	4150	4536	4897	475	475	429
7	86.0	6150	17,045	17,045	1466	1466	500
8	125.5	10,050	27,778	27,778	3486	3486	1550
9	155.0	33,000	48,387	33,333	7500	4,183	7500
10	171.0	50,000	51,462	73,099	8800	12,500	9500
11	231	60,000	47,619	69,264	11,000	16,000	9500
12	281	70,000	64,057	106,761	18,000	30,000	11,500

PHQK Series Permissible Output Shaft Load and Tilting Moments – Reinforced Bearings

Size	Z_2 Distance of Shaft Shoulder to Center of Output Bearing mm	F_{2ax100} Permitted Axial Force N	$F_{2rad100}$ Permitted Radial Force ≤100RPM N	$F_{2rad,acc}$ Radial Acceleration Force N	M_{2K100} Permitted Tilting Torque ≤100RPM Nm	$M_{2K,acc}$ Permitted Acceleration Tilting Torque Nm	C_{2K} Tilting Stiffness Nm/arcmin
5	104.0	5000	5500	5500	572	572	478

PHQK Series Load/Life/Speed Calculations

The permissible load and tilting moment values are based on an output speed of 100 RPM. For higher speeds the following applies, where n_2 is the desired speed:

$$F_{2radN} = \frac{F_{2rad100}}{\sqrt[3]{\frac{n_{2m^*}}{100rpm}}} \qquad F_{2AX} = \frac{F_{2ax100}}{\sqrt[3]{\frac{n_2}{100}}} \qquad M_{2KX} = \frac{M_{2K100}}{\sqrt[3]{\frac{n_2}{100}}}$$

The application output tilting moment should be determined by the following formula:

$$M_{2k,acc^*} = \frac{2 \bullet F_{2ax100^*} \bullet y_2 + F_{2rad,acc^*} \bullet (x_2 + Z_2)}{1000} \leq M_{2k,acc}$$

$$M_{2k,eq^*} = \sqrt[3]{\frac{n_{2b1} \bullet t_{b1} \bullet M_{2kb1}{}^3 + \ldots + n_{2bn} \bullet t_{bn} \bullet M_{2kbn}{}^3}{n_{2b1} \bullet t_{b1} + \ldots + n_{2bn} \bullet t_{bn}}} \leq M_{2kN}$$

$$F_{2rad,eq^*} = \sqrt[3]{\frac{n_{2b1} \bullet t_{b1} \bullet F_{2rb1}{}^3 + \ldots + n_{2bn} \bullet t_{bn} \bullet F_{2rbn}{}^3}{n_{2b1} \bullet t_{b1} + \ldots + n_{2bn} \bullet t_{bn}}} \leq F_{2radN}$$

Where:

Z_2	Distance of Shaft Shoulder to Center of Output Bearing
n_2	Actual Average Output Speed
X_2	Distance of the Shaft Shoulder to the Force Application Point
Y_2	Distance of the Shaft Axis to the Axial Force Application Point
F_{2ax^*}	Actual Axial Force at Gear Unit Output
F_{2ax100}	Permitted Axial Force
$F_{2rad100}$	Permitted Radial Force ≤100RPM
$F_{2rad,acc}$	Radial Acceleration Force
F_{2rad,acc^*}	Radial Acceleration Force at Gear Unit Output
M_{2K100}	Permitted Tilting Torque ≤100RPM
$M_{2K,acc}$	Permitted Acceleration Tilting Torque
M_{2k,acc^*}	Permitted Acceleration Tilting Torque at Gear Unit Output
C_{2K}	Tilting Stiffness

All formulas shown are based on METRIC values

Upper case letters are permissible values. Lower case letters are for existing values.

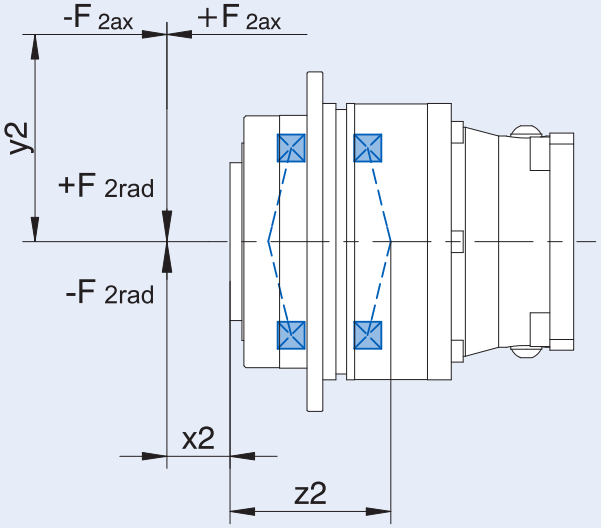

The hours of life (L_h) of the unit can be determined by the following formula:

bearing life for duty cycle ≤ 40%

L_h > 10,000 hours if $M_{2K100}/M_{2A^*} < 1.25$ and > 1
L_h > 20,000 hours if $M_{2K100}/M_{2A^*} > 1.25$ and > 1.5
L_h > 30,000 hours if $M_{2K100}/M_{2A^*} < 1.5$

bearing life for duty cycle ≥ 40%

$$L_{hA} = L_h \left(\frac{40\%}{\text{Duty Cycle}} \right)$$

Reducer Ratio (i)		Output Torque				Back-lash/ Red	Part Number* (Gearhead + Input)	Max. Input Speed RPM (n1)			Motor Shaft [3] Max Ø	Input Inertia	Tors. Stiffness
		Nom. [1]	Accel.	M2 accHT	Peak [2]			Continuous		Cyclic			
Nom.	Exact	M_{2N}	M_{2acc}		M_{2NOT}	$\Delta\phi_2$		EL 1,2	EL 3,4,5,6	All	d_{MW}	J_1	C_2
		Nm	Nm	Nm	Nm	arcmin					mm	kgcm²	Nm/ arcmin
PHQ5K	**(continued next page)**												
22.00	22/1	280	492	492	667	4.0/2.0	PHQ531_0055K102_0040 ME10	3300	2800	5000	≤19	1.5	69
							PHQ531_0055K102_0040 ME20				≤24	3.4	70
30.62	8360/273	280	550	550	929	4.0/2.0	PHQ531_0055K102_0056 ME10	3300	2800	5000	≤19	1.3	70
							PHQ531_0055K102_0056 ME20				≤24	3.2	
33.00	33/1	280	550	550	948	4.0/2.0	PHQ531_0055K102_0060 ME10	3300	2800	5000	≤19	1.1	70
							PHQ531_0055K102_0060 ME20				≤24	3.0	
36.54	3289/90	280	550	550	948	4.0/2.0	PHQ531_0055K102_0066 ME10	3600	3300	5500	≤19	1.1	70
							PHQ531_0055K102_0066 ME20				≤24	2.9	
45.70	21,021/460	280	550	550	948	4.0/2.0	PHQ531_0055K102_0083 ME10	3600	3300	5500	≤19	0.93	70
							PHQ531_0055K102_0083 ME20				≤24	2.8	
50.87	9614/189	280	550	550	948	4.0/2.0	PHQ531_0055K102_0092 ME10	3600	3300	5500	≤19	0.97	70
							PHQ531_0055K102_0092 ME20				≤24	2.9	
55.77	5577/100	280	550	550	948	4.0/2.0	PHQ531_0055K102_0100 ME10	4000	3800	6000	≤19	0.85	70
							PHQ531_0055K102_0100 ME20	3700	3700		≤24	2.7	
63.61	1463/23	280	550	550	948	4.0/2.0	PHQ531_0055K102_0115 ME10	3600	3300	5500	≤19	0.88	70
							PHQ531_0055K102_0115 ME20				≤24	2.8	
69.40	4719/68	280	550	550	948	4.0/2.0	PHQ531_0055K102_0125 ME10	4000	3800	6000	≤19	0.79	70
							PHQ531_0055K102_0125 ME20	3700	3700		≤24	2.7	
77.63	2717/35	280	550	550	948	4.0/2.0	PHQ531_0055K102_0140 ME10	4000	3800	6000	≤19	0.82	70
							PHQ531_0055K102_0140 ME20	3700	3700		≤24	2.7	
91.93	1287/14	280	550	550	948	4.0/2.0	PHQ531_0055K102_0165 ME10	4000	4000	7000	≤19	0.73	70
							PHQ531_0055K102_0165 ME20	3700	3700	6000	≤24	2.6	
96.60	11,495/119	280	550	550	948	4.0/2.0	PHQ531_0055K102_0175 ME10	4000	3800	6000	≤19	0.77	70
							PHQ531_0055K102_0175 ME20	3700	3700		≤24	2.7	
110.8	4433/40	280	550	550	948	4.0/2.0	PHQ531_0055K102_0200 ME10	4000	4000	7000	≤19	0.71	70
							PHQ531_0055K102_0200 ME20	3700	3700	6000	≤24	2.6	

[1] *Based on input speed of 2000 RPM. See page <?>.for details on torque calculations.*
[2] *Maximum momentary torque for emergency stops or heavy shock load. (Admissible stops per life of gearhead = 1,000 stops maximum.)*
* *Motor shaft adapter code (shaft diameter max - mm): ME10 (19), ME20 (32), ME30 (38), ME40 (48), ME50 (60)*

Selection Data

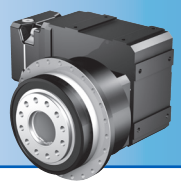

Reducer Ratio (i)		Output Torque				Back-lash/ Red	Part Number* (Gearhead + Input)	Max. Input Speed RPM (n1)			Motor Shaft [3] Max Ø	Input Inertia	Tors. Stiffness
		Nom. [1]	Accel.	M2 accHT	Peak [2]			Continuous		Cyclic			
Nom.	Exact	Nm	Nm	Nm	Nm	arcmin		EL 1,2	EL 3,4,5,6	All	mm	kgcm²	Nm/ arcmin
PHQ5K	**(continued from previous page)**												
128.0	6270/49	280	550	550	948	4.0/2.0	PHQ531_0055K102_0230 ME10	4000	4000	7000	≤19	0.72	70
							PHQ531_0055K102_0230 ME20	3700	3700	6000	≤24	2.6	
138.7	13,871/100	280	550	550	948	4.0/2.0	PHQ531_0055K102_0250 ME10	4000	4000	7000	≤19	0.68	70
							PHQ531_0055K102_0250 ME20	3700	3700	6000	≤24	2.6	
154.3	6479/42	280	550	550	948	4.0/2.0	PHQ531_0055K102_0280 ME10	4000	4000	7000	≤19	0.70	70
							PHQ531_0055K102_0280 ME20	3700	3700	6000	≤24	2.6	
185.4	51,909/280	280	462	462	836	4.0/2.0	PHQ531_0055K102_0340 ME10	4000	4000	7000	≤19	0.63	70
193.1	20,273/105	280	550	550	948	4.0/2.0	PHQ531_0055K102_0350 ME10	4000	4000	7000	≤19	0.68	70
							PHQ531_0055K102_0350 ME20	3700	3700	6000	≤24	2.6	
221.7	4433/20	280	389	389	704	4.0/2.0	PHQ531_0055K102_0400 ME10	4000	4000	7000	≤19	0.62	70
258.0	25,289/98	280	550	550	948	4.0/2.0	PHQ531_0055K102_0470 ME10	4000	4000	7000	≤19	0.63	70
276.7	55,341/200	264	316	316	572	4.0/2.0	PHQ531_0055K102_0500 ME10	4000	4000	7000	≤19	0.62	70
308.5	6479/21	280	542	542	948	4.0/2.0	PHQ531_0055K102_0560 ME10	4000	4000	7000	≤19	0.62	70
385.2	26,961/70	280	440	440	797	4.0/2.0	PHQ531_0055K102_0700 ME10	4000	4000	7000	≤19	0.62	70

[1] *Based on input speed of 2000 RPM. See page <?>.for details on torque calculations.*
[2] *Maximum momentary torque for emergency stops or heavy shock load. (Admissible stops per life of gearhead = 1,000 stops maximum.)*
* *Motor shaft adapter code (shaft diameter max - mm): ME10 (19), ME20 (32), ME30 (38), ME40 (48), ME50 (60)*

Reducer Ratio (i)		Output Torque				Back-lash/ Red	Part Number* (Gearhead + Input)	Max. Input Speed RPM (n1)			Motor Shaft [3] Max Ø	Input Inertia	Tors. Stiffness
		Nom. [1]	Accel.	M2 accHT	Peak [2]			Continuous		Cyclic			
Nom.	Exact	Nm	Nm	Nm	Nm	arcmin		EL 1,2	EL 3,4,5,6	All	mm	kgcm²	Nm/ arcmin
PHQ7K (continued next page)													
22.00	22/1	500	921		1667	4.0/2.0	PHQ731_0055K202_0040 ME20	3000	2600	4500	≤32	6.6	134
							PHQ731_0055K202_0040 ME30				≤38	12	135
24.00	24/1	500	536		727	4.0/2.0	PHQ731_0055K202_0044 ME10	3000	2600	4500	≤19	2.8	131
			948		1819		PHQ731_0055K202_0044 ME20				≤32	6.2	135
							PHQ731_0055K202_0044 ME30				≤38	12	
28.47	2107/74	500	1004		2100	4.0/2.0	PHQ731_0055K202_0052 ME20	3000	2600	4500	≤32	5.7	135
							PHQ731_0055K202_0052 ME30				≤38	11	
33.00	33/1	500	737		1000	4.0/2.0	PHQ731_0055K202_0060 ME10	3000	2600	4500	≤19	2.4	133
			1050		2100		PHQ731_0055K202_0060 ME20				≤32	5.8	135
							PHQ731_0055K202_0060 ME30				≤38	11	
36.76	2279/62	500	822		1115	4.0/2.0	PHQ731_0055K202_0067 ME10	3500	3100	5000	≤19	1.8	134
			1050		2100		PHQ731_0055K202_0067 ME20				≤32	5.2	135
							PHQ731_0055K202_0067 ME30				≤38	10	136
39.15	23,177/592	500	1050		2100	4.0/2.0	PHQ731_0055K202_0071 ME20	3000	2600	4500	≤32	5.4	135
							PHQ731_0055K202_0071 ME30				≤38	11	136
46.18	1247/27	500	1032		1400	4.0/2.0	PHQ731_0055K202_0084 ME10	3500	3100	5000	≤19	1.4	134
			1050		2100		PHQ731_0055K202_0084 ME20				≤32	4.8	135
							PHQ731_0055K202_0084 ME30				≤38	10	136
50.55	25,069/496	500	1050		1533	4.0/2.0	PHQ731_0055K202_0092 ME10	3500	3100	5000	≤19	1.6	135
					2100		PHQ731_0055K202_0092 ME20				≤32	5.0	136
							PHQ731_0055K202_0092 ME30				≤38	10	
55.40	2881/52	500	1050		1680	4.0/2.0	PHQ731_0055K202_0100 ME10	3900	3500	5500	≤19	1.2	135
					2100		PHQ731_0055K202_0100 ME20	3700			≤32	4.6	136
							PHQ731_0055K202_0100 ME30	3500		5000	≤38	10	
63.50	13,717/216	500	1050		1925	4.0/2.0	PHQ731_0055K202_0115 ME10	3500	3100	5000	≤19	1.3	135
					2100		PHQ731_0055K202_0115 ME20				≤32	4.7	136
							PHQ731_0055K202_0115 ME30				≤38	10	
69.88	559/8	500	1050		2100	4.0/2.0	PHQ731_0055K202_0125 ME10	3900	3500	5500	≤19	1.1	135
							PHQ731_0055K202_0125 ME20	3700			≤32	4.5	136
							PHQ731_0055K202_0125 ME30	3500		5000	≤38	9.8	

[1] *Based on input speed of 2000 RPM. See page <?>.for details on torque calculations.*
[2] *Maximum momentary torque for emergency stops or heavy shock load. (Admissible stops per life of gearhead = 1,000 stops maximum.)*
* *Motor shaft adapter code (shaft diameter max - mm): ME10 (19), ME20 (32), ME30 (38), ME40 (48), ME50 (60)*

Selection Data

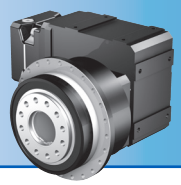

Reducer Ratio (i)		Output Torque				Back-lash/ Red	Part Number* (Gearhead + Input)	Max. Input Speed RPM (n1)			Motor Shaft [3] Max Ø	Input Inertia	Tors. Stiffness
		Nom. [1]	Accel.	M2 accHT	Peak [2]			Continuous		Cyclic			
Nom.	Exact	M_{2N} Nm	M_{2acc} Nm	Nm	M_{2NOT} Nm	$\Delta\phi_2$ arcmin		EL 1,2	EL 3,4,5,6	All	d_{MW} mm	J_1 kgcm²	C_2 Nm/ arcmin
PHQ7K	**(continued from previous page)**												
76.18	31,691/416	500	1050		2100	4.0/2.0	PHQ731_0055K202_0140 ME10	3900	3500	5500	≤19	1.1	135
							PHQ731_0055K202_0140 ME20	3700			≤32	4.5	136
							PHQ731_0055K202_0140 ME30	3500		5000	≤38	9.9	
92.72	2967/32	500	1050		2100	4.0/2.0	PHQ731_0055K202_0170 ME10	4000	3900	6500	≤19	0.90	135
							PHQ731_0055K202_0170 ME20	3700	3700	6000	≤32	4.3	136
							PHQ731_0055K202_0170 ME30	3500	3500	5000	≤38	9.6	
96.08	6149/64	500	1050		2100	4.0/2.0	PHQ731_0055K202_0175 ME10	3900	3500	5500	≤19	1.0	135
							PHQ731_0055K202_0175 ME20	3700			≤32	4.4	136
							PHQ731_0055K202_0175 ME30	3500		5000	≤38	9.7	
111.8	559/5	500	1050		2100	4.0/2.0	PHQ731_0055K202_0200 ME10	4000	3900	6500	≤19	0.83	136
							PHQ731_0055K202_0200 ME20	3700	3700	6000	≤24	2.7	
127.5	32,637/256	500	1050		2100	4.0/2.0	PHQ731_0055K202_0230 ME10	4000	3900	6500	≤19	0.87	136
							PHQ731_0055K202_0230 ME20	3700	3700	6000	≤32	4.3	
							PHQ731_0055K202_0230 ME30	3500	3500	5000	≤38	9.6	
138.2	1935/14	500	1050		2100	4.0/2.0	PHQ731_0055K202_0250 ME10	4000	3900	6500	≤19	0.77	136
							PHQ731_0055K202_0250 ME20	3700	3700	6000	≤24	2.7	
153.7	6149/40	500	1050		2100	4.0/2.0	PHQ731_0055K202_0280 ME10	4000	3900	6500	≤19	0.81	136
							PHQ731_0055K202_0280 ME20	3700	3700	6000	≤24	2.7	
184.9	1849/10	500	976		1765	4.0/2.0	PHQ731_0055K202_0340 ME10	4000	3900	6500	≤19	0.71	136
							PHQ731_0055K202_0340 ME20	3700	3700	6000	≤24	2.6	
190.0	21,285/112	500	1050		2100	4.0/2.0	PHQ731_0055K202_0350 ME10	4000	3900	6500	≤19	0.76	136
							PHQ731_0055K202_0350 ME20	3700	3700	6000	≤24	2.7	
222.2	1333/6	500	732		1126	4.0/2.0	PHQ731_0055K202_0400 ME10	4000	3900	6500	≤19	0.66	136
254.2	20,339/80	500	1050		2100	4.0/2.0	PHQ731_0055K202_0460 ME10	4000	3900	6500	≤19	0.71	136
							PHQ731_0055K202_0460 ME20	3700	3700	6000	≤24	2.6	
277.7	6665/24	500	610		1055	4.0/2.0	PHQ731_0055K202_0500 ME10	4000	3900	6500	≤19	0.64	136
305.5	14,663/48	500	1006		1548	4.0/2.0	PHQ731_0055K202_0560 ME10	4000	3900	6500	≤19	0.66	136
381.8	73,315/192	500	839		1451	4.0/2.0	PHQ731_0055K202_0690 ME10	4000	3900	6500	≤19	0.64	136

[1] Based on input speed of 2000 RPM. See page <?>.for details on torque calculations.
[2] Maximum momentary torque for emergency stops or heavy shock load. (Admissible stops per life of gearhead = 1,000 stops maximum.)
** Motor shaft adapter code (shaft diameter max - mm): ME10 (19), ME20 (32), ME30 (38), ME40 (48), ME50 (60)*

Reducer Ratio (i)		Output Torque				Back-lash/ Red	Part Number* (Gearhead + Input)	Max. Input Speed RPM (n1)			Motor Shaft [3] Max Ø	Input Inertia	Tors. Stiffness
		Nom. [1]	Accel.	M2 accHT	Peak [2]			Continuous		Cyclic			
Nom.	Exact	Nm	Nm	Nm	Nm	arcmin		EL 1,2	EL 3,4,5,6	All	mm	kgcm²	Nm/ arcmin
PHQ8K	**(continued next page)**												
22.00	22/1	1400	2421	4446		3.5/1.5	PHQ831_0055K402_0040 ME30	2600	2200	3800	≤38	20	395
							PHQ831_0055K402_0040 ME40				≤48	42	394
24.00	24/1	1400	2493	4850		3.5/1.5	PHQ831_0055K402_0044 ME30	2600	2200	3800	≤38	19	395
							PHQ831_0055K402_0044 ME40				≤48	40	
29.82	1849/62	1400	2680	4964		3.5/1.5	PHQ831_0055K402_0054 ME30	2600	2200	3800	≤38	16	397
							PHQ831_0055K402_0054 ME40				≤48	38	
33.00	33/1	1400	2772	4964		3.5/1.5	PHQ831_0055K402_0060 ME30	2600	2200	3800	≤38	17	397
							PHQ831_0055K402_0060 ME40				≤48	39	
36.95	2365/64	1400	2065	2801		3.5/1.5	PHQ831_0055K402_0067 ME20	3000	2600	4500	≤32	8.6	395
			2800	4964			PHQ831_0055K402_0067 ME30				≤38	14	398
							PHQ831_0055K402_0067 ME40				≤48	36	
41.01	20,339/496	1400	2800	4964		3.5/1.5	PHQ831_0055K402_0075 ME30	2600	2200	3800	≤38	15	398
							PHQ831_0055K402_0075 ME40				≤48	37	
46.07	645/14	1400	2575	3492		3.5/1.5	PHQ831_0055K402_0084 ME20	3000	2600	4500	≤32	7.2	397
			2800	4964			PHQ831_0055K402_0084 ME30				≤38	13	398
							PHQ831_0055K402_0084 ME40				≤48	35	
50.81	26,015/512	1400	2800	3852		3.5/1.5	PHQ831_0055K402_0092 ME20	3000	2600	4500	≤32	7.7	397
				4964			PHQ831_0055K402_0092 ME30				≤38	13	399
							PHQ831_0055K402_0092 ME40				≤48	35	
55.54	1333/24	1400	2800	4209		3.5/1.5	PHQ831_0055K402_0100 ME20	3400	3000	5000	≤32	6.4	398
				4964			PHQ831_0055K402_0100 ME30				≤38	12	399
							PHQ831_0055K402_0100 ME40	3000		4500	≤48	34	
63.35	7095/112	1400	2800	4802		3.5/1.5	PHQ831_0055K402_0115 ME20	3000	2600	4500	≤32	6.7	398
				4964			PHQ831_0055K402_0115 ME30				≤38	12	399
							PHQ831_0055K402_0115 ME40				≤48	34	
69.62	1462/21	1400	2800	4964		3.5/1.5	PHQ831_0055K402_0125 ME20	3400	3000	5000	≤32	5.7	398
							PHQ831_0055K402_0125 ME30				≤38	11	399
							PHQ831_0055K402_0125 ME40	3000		4500	≤48	33	

[1] *Based on input speed of 2000 RPM. See page <?>.for details on torque calculations.*
[2] *Maximum momentary torque for emergency stops or heavy shock load. (Admissible stops per life of gearhead = 1,000 stops maximum.)*
* *Motor shaft adapter code (shaft diameter max - mm): ME10 (19), ME20 (32), ME30 (38), ME40 (48), ME50 (60)*

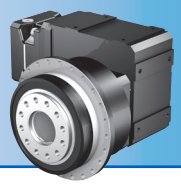

Selection Data

Reducer Ratio (i)		Output Torque				Back-lash/ Red	Part Number* (Gearhead + Input)	Max. Input Speed RPM (n1)			Motor Shaft [3] Max Ø	Input Inertia	Tors. Stiffness
		Nom. [1]	Accel.	M2 accHT	Peak [2]			Continuous		Cyclic			
Nom.	Exact	M_{2N} Nm	M_{2acc} Nm	Nm	M_{2NOT} Nm	$\Delta\phi_2$ arcmin		EL 1,2	EL 3,4,5,6	All	d_{MW} mm	J_1 kgcm²	C_2 Nm/ arcmin

PHQ8K (continued from previous page)

76.37	14,663/192	1400	2800	4964		3.5/1.5	PHQ831_0055K402_0140 ME20	3400	3000	5000	≤32	6.1	399
							PHQ831_0055K402_0140 ME30				≤38	12	
							PHQ831_0055K402_0140 ME40	3000		4500	≤48	33	
93.16	559/6	1400	2800	4964		3.5/1.5	PHQ831_0055K402_0170 ME20	3600	3300	5500	≤32	5.0	399
							PHQ831_0055K402_0170 ME30	3500		5000	≤38	11	
							PHQ831_0055K402_0170 ME40	3000	3000	4500	≤48	32	
95.73	8041/84	1400	2800	4964		3.5/1.5	PHQ831_0055K402_0175 ME20	3400	3000	5000	≤32	5.5	399
							PHQ831_0055K402_0175 ME30				≤38	11	
							PHQ831_0055K402_0175 ME40	3000		4500	≤48	33	
111.1	1333/12	1400	2800	4964		3.5/1.5	PHQ831_0055K402_0200 ME20	3600	3300	5500	≤32	4.8	399
							PHQ831_0055K402_0200 ME30	3500		5000	≤38	10	
128.1	6149/48	1400	2800	4964		3.5/1.5	PHQ831_0055K402_0230 ME20	3600	3300	5500	≤32	4.9	399
							PHQ831_0055K402_0230 ME30	3500		5000	≤38	10	
							PHQ831_0055K402_0230 ME40	3000	3000	4500	≤48	32	
139.0	4171/30	1400	2800	4964		3.5/1.5	PHQ831_0055K402_0250 ME20	3600	3300	5500	≤32	4.6	399
							PHQ831_0055K402_0250 ME30	3500		5000	≤38	9.9	
152.7	14,663/96	1400	2800	4964		3.5/1.5	PHQ831_0055K402_0280 ME20	3600	3300	5500	≤32	4.7	399
							PHQ831_0055K402_0280 ME30	3500		5000	≤38	10	
185.2	2408/13	1400	2464	4069		3.5/1.5	PHQ831_0055K402_0340 ME20	3600	3300	5500	≤24	2.8	399
191.2	45,881/240	1400	2800	4964		3.5/1.5	PHQ831_0055K402_0350 ME20	3600	3300	5500	≤32	4.5	399
							PHQ831_0055K402_0350 ME30	3500		5000	≤38	9.8	
222.8	2451/11	1400	1952	3529		3.5/1.5	PHQ831_0055K402_0410 ME20	3600	3300	5500	≤24	2.8	399
254.7	3311/13	1400	2800	4964		3.5/1.5	PHQ831_0055K402_0460 ME20	3600	3300	5500	≤24	2.8	399
277.3	5547/20	1400	1708	3088		3.5/1.5	PHQ831_0055K402_0500 ME20	3600	3300	5500	≤24	2.7	399
306.4	2451/8	1400	2684	4853		3.5/1.5	PHQ831_0055K402_0560 ME20	3600	3300	5500	≤24	2.7	399
381.4	61,017/160	1400	2348	4247		3.5/1.5	PHQ831_0055K402_0690 ME20	3600	3300	5500	≤24	2.7	400

[1] Based on input speed of 2000 RPM. See page <?>.for details on torque calculations.
[2] Maximum momentary torque for emergency stops or heavy shock load. (Admissible stops per life of gearhead = 1,000 stops maximum.)
** Motor shaft adapter code (shaft diameter max - mm): ME10 (19), ME20 (32), ME30 (38), ME40 (48), ME50 (60)*

Reducer Ratio (i)		Output Torque				Back-lash/ Red $\Delta\phi_2$	Part Number* (Gearhead + Input)	Max. Input Speed RPM (n1)			Motor Shaft [3] Max Ø d_{MW}	Input Inertia J_1	Tors. Stiffness C_2
		Nom. [1] M_{2N}	Accel. M_{2acc}	M2 accHT	Peak [2] M_{2NOT}			Continuous		Cyclic			
Nom.	Exact	Nm	Nm	Nm	Nm	arcmin		EL 1,2	EL 3,4,5,6	All	mm	kgcm²	Nm/ arcmin
PHQ9K (continued next page)													
44.08	1102/25	3800	5760	5760	8779	4.0/2.0	PHQ941_0060K513_0073 ME30	1900	1800	3200	≤38	26	767
							PHQ941_0060K513_0073 ME40				≤48	48	766
48.80	17081/350	3800	5760	5760	9720	4.0/2.0	PHQ941_0060K513_0081 ME30	1900	1800	3200	≤38	24	767
							PHQ941_0060K513_0081 ME40				≤48	46	
55.01	8526/155	3800	5760	5760	10954	4.0/2.0	PHQ941_0060K513_0092 ME30	1900	1800	3200	≤38	21	768
							PHQ941_0060K513_0092 ME40				≤48	43	
60.90	609/10	3800	5760	5760	11250	4.0/2.0	PHQ941_0060K513_0100 ME30	1900	1800	3200	≤38	20	769
							PHQ941_0060K513_0100 ME40				≤48	42	768
69.41	10759/155	3800	5760	5760	11250	4.0/2.0	PHQ941_0060K513_0115 ME30	2300	2200	3600	≤38	18	769
							PHQ941_0060K513_0115 ME40				≤48	40	
76.85	1537/20	3800	5760	5760	11250	4.0/2.0	PHQ941_0060K513_0130 ME30	2300	2200	3600	≤38	17	770
							PHQ941_0060K513_0130 ME40				≤48	39	769
87.22	11774/135	3800	4801	4801	6512	4.0/2.0	PHQ941_0060K513_0145 ME20	2300	2200	3600	≤32	9.9	768
			5760	5760	11250		PHQ941_0060K513_0145 ME30				≤38	15	770
							PHQ941_0060K513_0145 ME40				≤48	37	
96.56	26071/270	3800	5315	5315	7209	4.0/2.0	PHQ941_0060K513_0160 ME20	2300	2200	3600	≤32	9.4	769
			5760	5760	11250		PHQ941_0060K513_0160 ME30				≤38	15	770
							PHQ941_0060K513_0160 ME40				≤48	37	
104.9	6293/60	3800	5760	5760	7830	4.0/2.0	PHQ941_0060K513_0175 ME20	2800	2500	4200	≤32	8.5	769
					11250		PHQ941_0060K513_0175 ME30				≤38	14	770
							PHQ941_0060K513_0175 ME40				≤48	36	
116.1	27869/240	3800	5760	5760	8669	4.0/2.0	PHQ941_0060K513_0195 ME20	2800	2500	4200	≤32	8.2	769
					11250		PHQ941_0060K513_0195 ME30				≤38	14	770
							PHQ941_0060K513_0195 ME40				≤48	36	

[1] *Based on input speed of 2000 RPM. See page <?>.for details on torque calculations.*
[2] *Maximum momentary torque for emergency stops or heavy shock load. (Admissible stops per life of gearhead = 1,000 stops maximum.)*
* *Motor shaft adapter code (shaft diameter max - mm): ME10 (19), ME20 (32), ME30 (38), ME40 (48), ME50 (60)*

Selection Data

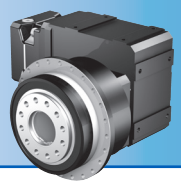

Reducer Ratio (i)		Output Torque				Back-lash/ Red	Part Number* (Gearhead + Input)	Max. Input Speed RPM (n1)			Motor Shaft [3] Max Ø	Input Inertia	Tors. Stiffness
		Nom. [1]	Accel.	M2 accHT	Peak [2]			Continuous		Cyclic			
		M_{2N}	M_{2acc}		M_{2NOT}	$\Delta\phi_2$					d_{MW}	J_1	C_2
Nom.	Exact	Nm	Nm	Nm	Nm	arcmin		EL 1,2	EL 3,4,5,6	All	mm	kgcm²	Nm/ arcmin

PHQ9K (continued from previous page)

132.0	2639/20	3800	5760	5760	9158	4.0/2.0	PHQ941_0060K513_0220 ME20	2800	2500	4200	≤32	7.2	770
					11250		PHQ941_0060K513_0220 ME30				≤38	13	771
							PHQ941_0060K513_0220 ME40				≤48	35	
146.1	11687/80	3800	5760	5760	10139	4.0/2.0	PHQ941_0060K513_0240 ME20	2800	2500	4200	≤32	7.0	770
					11250		PHQ941_0060K513_0240 ME30				≤38	12	771
							PHQ941_0060K513_0240 ME40				≤48	34	
175.1	14007/80	3800	5760	5760	10349	4.0/2.0	PHQ941_0060K513_0290 ME20	3400	3000	5000	≤32	6.1	770
					11250		PHQ941_0060K513_0290 ME30				≤38	12	771
							PHQ941_0060K513_0290 ME40	3000		4500	≤48	33	
193.8	62031/320	3800	5760	5760	11250	4.0/2.0	PHQ941_0060K513_0320 ME20	3400	3000	5000	≤32	6.0	771
							PHQ941_0060K513_0320 ME30				≤38	11	
							PHQ941_0060K513_0320 ME40	3000		4500	≤48	33	
208.8	1044/5	3800	5760	5760	11129	4.0/2.0	PHQ941_0060K513_0350 ME20	3400	3000	5000	≤32	5.6	771
							PHQ941_0060K513_0350 ME30				≤38	11	
231.2	8091/35	3800	5760	5760	11250	4.0/2.0	PHQ941_0060K513_0390 ME20	3400	3000	5000	≤32	5.5	771
							PHQ941_0060K513_0390 ME30				≤38	11	
261.0	261/1	3800	5760	5760	11250	4.0/2.0	PHQ941_0060K513_0440 ME20	3400	3000	5000	≤32	5.1	771
							PHQ941_0060K513_0440 ME30				≤38	10	
289.0	8091/28	3800	5760	5760	11250	4.0/2.0	PHQ941_0060K513_0480 ME20	3400	3000	5000	≤32	5.0	771
							PHQ941_0060K513_0480 ME30				≤38	10	
349.8	22736/65	3800	5760	5760	11250	4.0/2.0	PHQ941_0060K513_0580 ME20	3400	3000	5000	≤32	4.7	771
							PHQ941_0060K513_0580 ME30				≤38	10	
387.3	25172/65	3800	5760	5760	11250	4.0/2.0	PHQ941_0060K513_0650 ME20	3400	3000	5000	≤32	4.7	771
							PHQ941_0060K513_0650 ME30				≤38	10	
420.5	841/2	3800	5673	5673	7880	4.0/2.0	PHQ941_0060K513_0700 ME20	3400	3000	5000	≤24	3.0	771
465.6	26071/56	3800	5760	5760	8724	4.0/2.0	PHQ941_0060K513_0780 ME20	3400	3000	5000	≤24	3.0	771
523.7	26187/50	3800	4765	4765	7859	4.0/2.0	PHQ941_0060K513_0870 ME20	3400	3000	5000	≤24	2.8	771
579.9	115971/200	3800	5275	5275	8701	4.0/2.0	PHQ941_0060K513_0970 ME20	3400	3000	5000	≤24	2.8	771

[1] *Based on input speed of 2000 RPM. See page <?>.for details on torque calculations.*
[2] *Maximum momentary torque for emergency stops or heavy shock load. (Admissible stops per life of gearhead = 1,000 stops maximum.)*
* *Motor shaft adapter code (shaft diameter max - mm): ME10 (19), ME20 (32), ME30 (38), ME40 (48), ME50 (60)*

Reducer Ratio (i)		Output Torque				Back-lash/ Red	Part Number* (Gearhead + Input)	Max. Input Speed RPM (n1)			Motor Shaft [3] Max Ø	Input Inertia	Tors. Stiffness
		Nom. [1]	Accel.	M2 accHT	Peak [2]			Continuous		Cyclic			
Nom.	Exact	M_{2N}	M_{2acc}		M_{2NOT}	$\Delta\phi_2$		EL 1,2	EL 3,4,5,6	All	d_{MW}	J_1	C_2
		Nm	Nm	Nm	Nm	arcmin					mm	kgcm²	Nm/ arcmin
PHQ10K	**(continued next page)**												
45.38	59535/1312	6500	10000	–	16947	4.0	PHQ1041_0060K713_0076 ME40	1700	1600	2700	≤48	93	1545
							PHQ1041_0060K713_0076 ME50				≤60	120	1551
50.24	263655/5248	6500	10000	–	18762	4.0	PHQ1041_0060K713_0084 ME40	1700	1600	2700	≤48	88	1548
							PHQ1041_0060K713_0084 ME50				≤60	116	1553
55.13	441/8	6500	10000	–	20000	4.0	PHQ1041_0060K713_0092 ME40	1700	1600	2700	≤48	77	1550
							PHQ1041_0060K713_0092 ME50				≤60	105	1554
61.03	1953/32	6500	10000	–	20000	4.0	PHQ1041_0060K713_0100 ME40	1700	1600	2700	≤48	74	1552
							PHQ1041_0060K713_0100 ME50				≤60	102	1555
70.69	70119/992	6500	10000	–	14077	4.0	PHQ1041_0060K713_0120 ME30	2000	1900	3200	≤38	41	1553
					20000		PHQ1041_0060K713_0120 ME40				≤48	63	1554
							PHQ1041_0060K713_0120 ME50				≤60	91	1557
78.26	10017/128	6500	10000	–	15584	4.0	PHQ1041_0060K713_0130 ME30	2000	1900	3200	≤38	39	1555
					20000		PHQ1041_0060K713_0130 ME40				≤48	62	
							PHQ1041_0060K713_0130 ME50				≤60	89	1557
88.81	1421/16	6500	10000	–	17637	4.0	PHQ1041_0060K713_0150 ME30	2000	1900	3200	≤38	32	1556
					20000		PHQ1041_0060K713_0150 ME40				≤48	55	1557
							PHQ1041_0060K713_0150 ME50				≤60	83	1558
98.33	6293/64	6500	10000	–	19525	4.0	PHQ1041_0060K713_0165 ME30	2000	1900	3200	≤38	31	1557
					20000		PHQ1041_0060K713_0165 ME40				≤48	54	
							PHQ1041_0060K713_0165 ME50				≤60	81	1559
109.7	80703/736	6500	10000	–	20000	4.0	PHQ1041_0060K713_0185 ME30	2400	2200	3600	≤38	26	1558
							PHQ1041_0060K713_0185 ME40				≤48	49	
							PHQ1041_0060K713_0185 ME50				≤60	77	1559
121.4	357399/2944	6500	10000	–	20000	4.0	PHQ1041_0060K713_0200 ME30	2400	2200	3600	≤38	26	1558
							PHQ1041_0060K713_0200 ME40				≤48	48	
							PHQ1041_0060K713_0200 ME50				≤60	76	1559
136.4	43659/320	6500	10000	–	20000	4.0	PHQ1041_0060K713_0230 ME30	2400	2200	3600	≤38	22	1559
							PHQ1041_0060K713_0230 ME40				≤48	44	
							PHQ1041_0060K713_0230 ME50				≤60	72	1560

[1] *Based on input speed of 2000 RPM. See page <?>.for details on torque calculations.*
[2] *Maximum momentary torque for emergency stops or heavy shock load. (Admissible stops per life of gearhead = 1,000 stops maximum.)*
* *Motor shaft adapter code (shaft diameter max - mm): ME10 (19), ME20 (32), ME30 (38), ME40 (48), ME50 (60)*

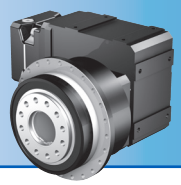

Selection Data

Reducer Ratio (i)		Output Torque				Back-lash/ Red	Part Number* (Gearhead + Input)	Max. Input Speed RPM (n1)			Motor Shaft [3] Max Ø	Input Inertia	Tors. Stiffness
		Nom. [1]	Accel.	M2 accHT	Peak [2]			Continuous		Cyclic			
Nom.	Exact	M_{2N} Nm	M_{2acc} Nm	Nm	M_{2NOT} Nm	$\Delta\phi_2$ arcmin		EL 1,2	EL 3,4,5,6	All	d_{MW} mm	J_1 kgcm²	C_2 Nm/ arcmin
PHQ10K	**(continued from previous page)**												
151.1	193347/1280	6500	10000	–	20000	4.0	PHQ1041_0060K713_0250 ME30	2400	2200	3600	≤38	21	1559
							PHQ1041_0060K713_0250 ME40				≤48	44	
							PHQ1041_0060K713_0250 ME50				≤60	72	1560
175.7	22491/128	6500	10000	–	20000	4.0	PHQ1041_0060K713_0290 ME30	2900	2600	4200	≤38	18	1559
							PHQ1041_0060K713_0290 ME40				≤48	40	1560
							PHQ1041_0060K713_0290 ME50	2500	2500	4000	≤60	68	
194.5	99603/512	6500	10000	–	20000	4.0	PHQ1041_0060K713_0320 ME30	2900	2600	4200	≤38	17	1560
							PHQ1041_0060K713_0320 ME40				≤48	40	
							PHQ1041_0060K713_0320 ME50			4000	≤60	68	
212.6	1701/8	6500	10000	–	20000	4.0	PHQ1041_0060K713_0350 ME30	2900	2600	4200	≤38	16	1560
							PHQ1041_0060K713_0350 ME40				≤48	37	
							PHQ1041_0060K713_0350 ME50	2500	2500	4000	≤60	66	
235.4	7533/32	6500	10000	–	20000	4.0	PHQ1041_0060K713_0390 ME30	2900	2600	4200	≤38	15	1560
							PHQ1041_0060K713_0390 ME40				≤48	37	
							PHQ1041_0060K713_0390 ME50	2500	2500	4000	≤60	66	
270.3	112455/416	6500	10000	–	20000	4.0	PHQ1041_0060K713_0450 ME30	2900	2600	4200	≤38	14	1560
							PHQ1041_0060K713_0450 ME40				≤48	35	
							PHQ1041_0060K713_0450 ME50	2500	2500	4000	≤60	65	
299.3	498015/1664	6500	10000	–	20000	4.0	PHQ1041_0060K713_0500 ME30	2900	2600	4200	≤38	13	1560
							PHQ1041_0060K713_0500 ME40				≤48	35	
							PHQ1041_0060K713_0500 ME50	2500	2500	4000	≤60	64	
351.4	22491/64	6500	10000	–	20000	4.0	PHQ1041_0060K713_0590 ME30	2900	2600	4200	≤38	12	1560
							PHQ1041_0060K713_0590 ME40				≤48	34	
							PHQ1041_0060K713_0590 ME50	2500	2500	4000	≤60	63	
389.1	99603/256	6500	10000	–	20000	4.0	PHQ1041_0060K713_0650 ME30	2900	2600	4200	≤38	12	1560
							PHQ1041_0060K713_0650 ME40				≤48	34	
							PHQ1041_0060K713_0650 ME50	2500	2500	4000	≤60	63	
427.2	13671/32	6500	10000	–	17839	4.0	PHQ1041_0060K713_0710 ME30	2900	2600	4200	≤38	11	1560
473.0	60543/128	6500	10000	–	19749	4.0	PHQ1041_0060K713_0790 ME30	2900	2600	4200	≤38	11	1560
534.0	68355/128	6500	10000	–	18207	4.0	PHQ1041_0060K713_0890 ME30	2900	2600	4200	≤38	11	1560
591.2	302715/512	6500	10000	–	20000	4.0	PHQ1041_0060K713_0990 ME30	2900	2600	4200	≤38	11	1560

[1] Based on input speed of 2000 RPM. See page <?>.for details on torque calculations.
[2] Maximum momentary torque for emergency stops or heavy shock load. (Admissible stops per life of gearhead = 1,000 stops maximum.)
** Motor shaft adapter code (shaft diameter max - mm): ME10 (19), ME20 (32), ME30 (38), ME40 (48), ME50 (60)*

Reducer Ratio (i)		Output Torque				Back-lash/ Red	Part Number* (Gearhead + Input)	Max. Input Speed RPM (n1)			Motor Shaft [3] Max Ø	Input Inertia	Tors. Stiffness
		Nom. [1]	Accel.	M2 accHT	Peak [2]			Continuous		Cyclic			
		M_{2N}	M_{2acc}		M_{2NOT}	$\Delta\phi_2$					d_{MW}	J_1	C_2
Nom.	Exact	Nm	Nm	Nm	Nm	arcmin		EL 1,2	EL 3,4,5,6	All	mm	kgcm²	Nm/ arcmin
PHQ11K	**(continued next page)**												
44.67	3127/70	12299	12299	–	16681	4.0	PHQ1141_0060K813_0074 ME40	1600	1500	2600	≤48	178	2578
							PHQ1141_0060K813_0074 ME50				≤60	206	2595
49.46	96937/1960	13000	13617	–	18470	4.0	PHQ1141_0060K813_0082 ME40	1600	1500	2600	≤48	164	2586
							PHQ1141_0060K813_0082 ME50				≤60	192	2600
55.70	11977/215	13000	15334	–	20797	4.0	PHQ1141_0060K813_0093 ME40	1600	1500	2600	≤48	136	2594
							PHQ1141_0060K813_0093 ME50				≤60	164	2605
61.67	53041/860	13000	16978	–	23027	4.0	PHQ1141_0060K813_0105 ME40	1600	1500	2600	≤48	127	2599
							PHQ1141_0060K813_0105 ME50				≤60	155	2608
89.05	28497/320	13000	22000	–	33239	4.0	PHQ1141_0060K813_0150 ME40	1900	1800	3000	≤48	83	2612
							PHQ1141_0060K813_0150 ME50				≤60	111	2616
98.59	126201/1280	13000	22000	–	36803	4.0	PHQ1141_0060K813_0165 ME40	1900	1800	3000	≤48	79	2614
							PHQ1141_0060K813_0165 ME50				≤60	107	2617
104.0	30149/290	11663	15259	–	20696	4.0	PHQ1141_0060K813_0175 ME30	2300	2100	3500	≤38	50	2614
							PHQ1141_0060K813_0175 ME40				≤48	73	2615
		13000	22000	–	38804		PHQ1141_0060K813_0175 ME50				≤60	101	2618
115.1	133517/1160	12912	16895	–	22915	4.0	PHQ1141_0060K813_0190 ME30	2300	2100	3500	≤38	48	2616
					42965		PHQ1141_0060K813_0190 ME40				≤48	70	
							PHQ1141_0060K813_0190 ME50				≤60	98	2619
138.3	31801/230	12400	18048	–	24479	4.0	PHQ1141_0060K813_0230 ME30	2300	2100	3500	≤38	36	2618
	31801/230	13000	22000		44000		PHQ1141_0060K813_0230 ME40				≤48	59	2619
							PHQ1141_0060K813_0230 ME50				≤60	87	2620
153.1	140833/920	13000	19983	–	27103	4.0	PHQ1141_0060K813_0260 ME30	2300	2100	3500	≤38	35	2619
			22000		44000		PHQ1141_0060K813_0260 ME40				≤48	57	
							PHQ1141_0060K813_0260 ME50				≤60	85	2621
175.5	7021/40	13000	21591	–	29284	4.0	PHQ1141_0060K813_0290 ME30	2800	2500	4000	≤38	28	2620
			22000		44000		PHQ1141_0060K813_0290 ME40				≤48	50	
							PHQ1141_0060K813_0290 ME50				≤60	78	2621

[1] *Based on input speed of 2000 RPM. See page <?>.for details on torque calculations.*
[2] *Maximum momentary torque for emergency stops or heavy shock load. (Admissible stops per life of gearhead = 1,000 stops maximum.)*
* *Motor shaft adapter code (shaft diameter max - mm): ME10 (19), ME20 (32), ME30 (38), ME40 (48), ME50 (60)*

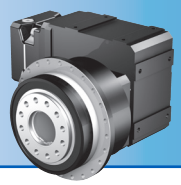

Reducer Ratio (i)		Output Torque				Back-lash/ Red	Part Number* (Gearhead + Input)	Max. Input Speed RPM (n1)			Motor Shaft [3] Max Ø	Input Inertia	Tors. Stiffness
		Nom. [1]	Accel.	M2	Peak [2]			Continuous		Cyclic			
Nom.	Exact	M_{2N}	M_{2acc}	accHT	M_{2NOT}	$\Delta\phi_2$		EL 1,2	EL 3,4,5,6	All	d_{MW}	J_1	C_2
		Nm	Nm	Nm	Nm	arcmin					mm	kgcm²	Nm/ arcmin
PHQ11K	**(continued from previous page)**												
194.3	31093/160	13000	22000	–	32424	4.0	PHQ1141_0060K813_0320 ME30	2800	2500	4000	≤38	27	2621
					44000		PHQ1141_0060K813_0320 ME40				≤48	50	
							PHQ1141_0060K813_0320 ME50				≤60	77	2622
216.8	8673/40	13000	22000	–	30353	4.0	PHQ1141_0060K813_0360 ME30	2800	2500	4000	≤38	23	2621
					44000		PHQ1141_0060K813_0360 ME40				≤48	45	
							PHQ1141_0060K813_0360 ME50	2500			≤60	73	2622
240.1	38409/160	13000	22000	–	33607	4.0	PHQ1141_0060K813_0400 ME30	2800	2500	4000	≤38	22	2622
					44000		PHQ1141_0060K813_0400 ME40				≤48	45	
							PHQ1141_0060K813_0400 ME50	2500			≤60	72	
265.5	531/2	13000	22000	–	34112	4.0	PHQ1141_0060K813_0440 ME30	2800	2500	4000	≤38	19	2622
							PHQ1141_0060K813_0440 ME40				≤48	41	
							PHQ1141_0060K813_0440 ME50	2500			≤60	70	
293.9	16461/56	13000	22000	–	37770	4.0	PHQ1141_0060K813_0490 ME30	2800	2500	4000	≤38	18	2622
							PHQ1141_0060K813_0490 ME40				≤48	40	
							PHQ1141_0060K813_0490 ME50	2500			≤60	69	
354.5	42539/120	13000	22000	–	39925	4.0	PHQ1141_0060K813_0590 ME30	2800	2500	4000	≤38	15	2622
							PHQ1141_0060K813_0590 ME40				≤48	37	
							PHQ1141_0060K813_0590 ME50	2500			≤60	66	2623
392.5	188387/480	13000	22000	–	44000	4.0	PHQ1141_0060K813_0650 ME30	2800	2500	4000	≤38	15	2623
							PHQ1141_0060K813_0650 ME40				≤48	37	
							PHQ1141_0060K813_0650 ME50	2500			≤60	66	
430.2	10325/24	13000	22000	–	43909	4.0	PHQ1141_0060K813_0720 ME30	2800	2500	4000	≤38	14	2623
							PHQ1141_0060K813_0720 ME40				≤48	35	
							PHQ1141_0060K813_0720 ME50	2500			≤60	64	
476.3	45725/96	13000	22000	–	44000	4.0	PHQ1141_0060K813_0790 ME30	2800	2500	4000	≤38	13	2623
							PHQ1141_0060K813_0790 ME40				≤48	35	
							PHQ1141_0060K813_0790 ME50	2500			≤60	64	
526.6	21063/40	13000	15237	–	20667	4.0	PHQ1141_0060K813_0880 ME30	2800	2500	4000	≤38	12	2623
583.0	93279/160	13000	16871	–	22883	4.0	PHQ1141_0060K813_0970 ME30	2800	2500	4000	≤38	12	2623

[1] Based on input speed of 2000 RPM. See page <?>.for details on torque calculations.
[2] Maximum momentary torque for emergency stops or heavy shock load. (Admissible stops per life of gearhead = 1,000 stops maximum.)
** Motor shaft adapter code (shaft diameter max - mm): ME10 (19), ME20 (32), ME30 (38), ME40 (48), ME50 (60)*

Reducer Ratio (i)		Output Torque				Back-lash/ Red	Part Number* (Gearhead + Input)	Max. Input Speed RPM (n1)			Motor Shaft [3] Max Ø	Input Inertia	Tors. Stiffness
		Nom. [1]	Accel.	M2 accHT	Peak [2]			Continuous		Cyclic			
Nom.	Exact	M_{2N}	M_{2acc}		M_{2NOT}	$\Delta\phi_2$		EL 1,2	EL 3,4,5,6	All	d_{MW}	J_1	C_2
		Nm	Nm	Nm	Nm	arcmin					mm	kgcm²	Nm/ arcmin
PHQ12K	**(continued next page)**												
75.15	221247/2944	20689	20689	–	28062	4.0	PHQ1241_0060K913_0125 ME40	1800	1800	2800	≤48	195	4614
							PHQ1241_0060K913_0125 ME50				≤60	223	4633
114.4	915/8	25000	31485	–	42705	4.0	PHQ1241_0060K913_0190 ME40	2200	2100	3300	≤48	119	4643
							PHQ1241_0060K913_0190 ME50				≤60	147	4651
143.7	266631/1856	25000	39537	–	53625	4.0	PHQ1241_0060K913_0240 ME40	2200	2100	3300	≤48	94	4651
							PHQ1241_0060K913_0240 ME50				≤60	122	4656
192.7	141825/736	25000	43000	–	71941	4.0	PHQ1241_0060K913_0320 ME40	2600	2500	3800	≤48	72	4657
							PHQ1241_0060K913_0320 ME50	2500			≤60	100	4660
228.3	584319/2560	25000	43000	–	78148	4.0	PHQ1241_0060K913_0380 ME40	2600	2500	3800	≤48	63	4659
							PHQ1241_0060K913_0380 ME50	2500			≤60	91	4661
293.6	300669/1024	25000	43000	–	80000	4.0	PHQ1241_0060K913_0490 ME40	2600	2500	3800	≤48	52	4661
							PHQ1241_0060K913_0490 ME50	2500			≤60	80	4663
378.4	629703/1664	25000	43000	–	80000	4.0	PHQ1241_0060K913_0630 ME40	2600	2500	3800	≤48	45	4663
							PHQ1241_0060K913_0630 ME50	2500			≤60	73	
450.0	187209/416	25000	39283	–	53281	4.0	PHQ1241_0060K913_0750 ME40	2600	2500	3800	≤48	41	4663
							PHQ1241_0060K913_0750 ME50	2500			≤60	70	4664
554.1	7199037/12992	25000	39537	–	53625	4.0	PHQ1241_0060K914_0920 ME40	2600	2500	3800	≤48	37	4664
562.7	4177219/7424	16474	16676	–	22618	4.0	PHQ1241_0060K914_0940 ME30	2600	2500	3800	≤38	14	4663
572.5	293105/512	25000	37154	–	57728	4.0	PHQ1241_0060K913_0950 ME40	2600	2500	3800	≤48	38	4664
							PHQ1241_0060K913_0950 ME50	2500			≤60	67	
743.3	3829275/5152	25000	43000	–	71941	4.0	PHQ1241_0060K914_1240 ME40	2600	2500	3800	≤48	36	4664
754.7	2221925/2944	22100	22369	–	30340	4.0	PHQ1241_0060K914_1260 ME30	2600	2500	3800	≤38	12	4664
880.4	15776613/17920	25000	43000	–	78148	4.0	PHQ1241_0060K914_1470 ME40	2600	2500	3800	≤48	35	4664
894.0	9154331/10240	25000	26496	–	35937	4.0	PHQ1241_0060K914_1490 ME30	2600	2500	3800	≤38	12	4664

[1] Based on input speed of 2000 RPM. See page <?>.for details on torque calculations.
[2] Maximum momentary torque for emergency stops or heavy shock load. (Admissible stops per life of gearhead = 1,000 stops maximum.)
** Motor shaft adapter code (shaft diameter max - mm): ME10 (19), ME20 (32), ME30 (38), ME40 (48), ME50 (60)*

Selection Data

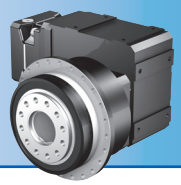

Reducer Ratio (i)		Output Torque				Back-lash/ Red	Part Number* (Gearhead + Input)	Max. Input Speed RPM (n1)			Motor Shaft [3] Max Ø	Input Inertia	Tors. Stiffness
		Nom. [1]	Accel.	M2	Peak [2]			Continuous		Cyclic			
Nom.	Exact	Nm	Nm	Nm	Nm	arcmin		EL 1,2	EL 3,4,5,6	All	mm	kgcm²	Nm/ arcmin
PHQ12K	**(continued next page)**												
1133	8118063/7168	25000	43000	–	80000	4.0	PHQ1241_0060K914_1890 ME40	2600	2500	3800	≤48	34	4664
1150	4710481/4096	25000	29221	–	39634	4.0	PHQ1241_0060K914_1920 ME30	2600	2500	3800	≤38	11	4664
1460	17001981/11648	25000	43000	–	80000	4.0	PHQ1241_0060K914_2430 ME40	2600	2500	3800	≤48	34	4665
1482	9865347/6656	25000	33011	–	44775	4.0	PHQ1241_0060K914_2470 ME30	2600	2500	3800	≤38	11	4665
1763	2932941/1664	25000	39283	–	53281	4.0	PHQ1241_0060K914_2940 ME30	2600	2500	3800	≤38	10	4665
2242	13775935/6144	25000	37154	–	57728	4.0	PHQ1241_0060K914_3740 ME30	2600	2500	3800	≤38	10	4665

[1] *Based on input speed of 2000 RPM. See page <?>.for details on torque calculations.*
[2] *Maximum momentary torque for emergency stops or heavy shock load. (Admissible stops per life of gearhead = 1,000 stops maximum.)*
* *Motor shaft adapter code (shaft diameter max - mm): ME10 (19), ME20 (32), ME30 (38), ME40 (48), ME50 (60)*

PHQK Series Dimensions — All Units

PHQ 5-10 K

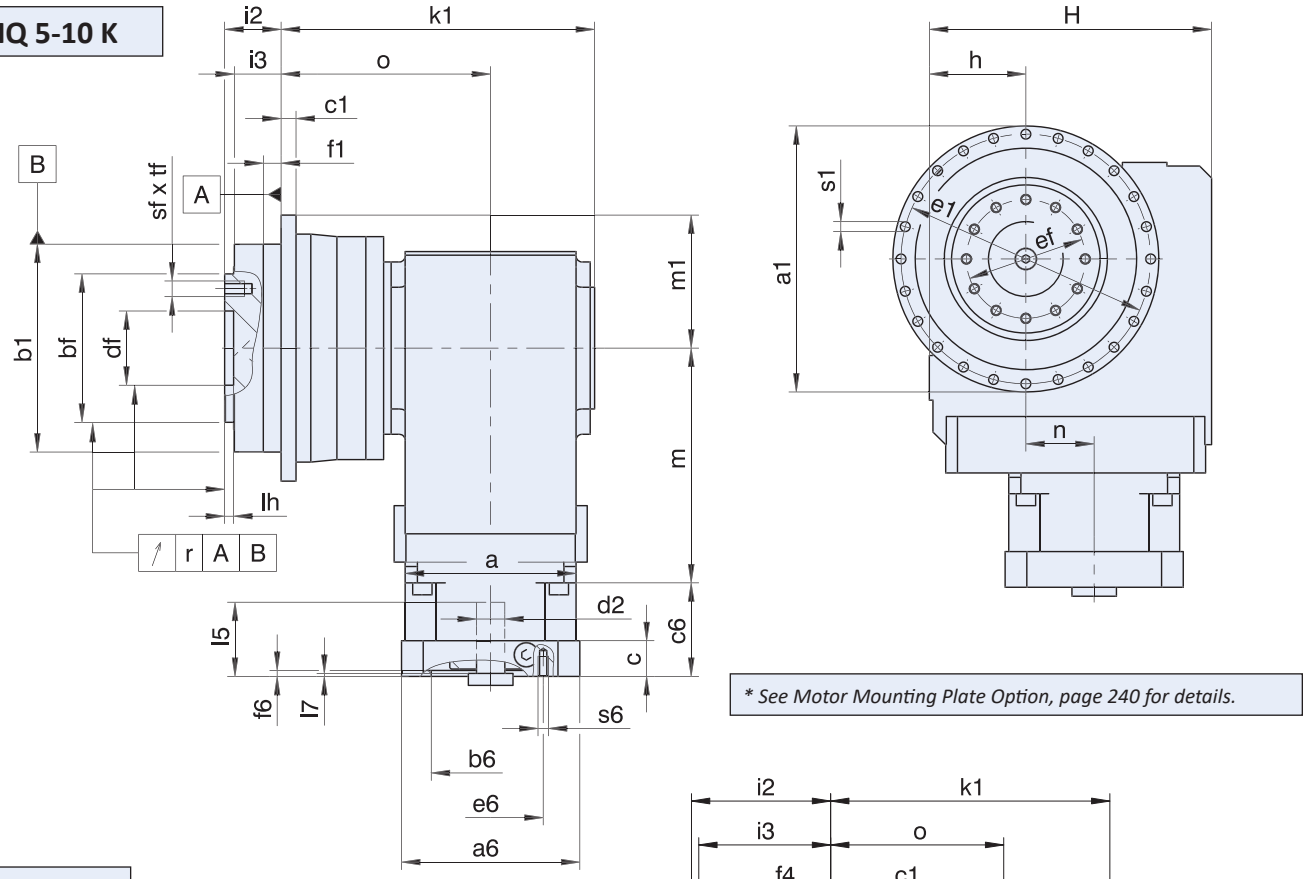

** See Motor Mounting Plate Option, page 240 for details.*

PHQ 11-12 K

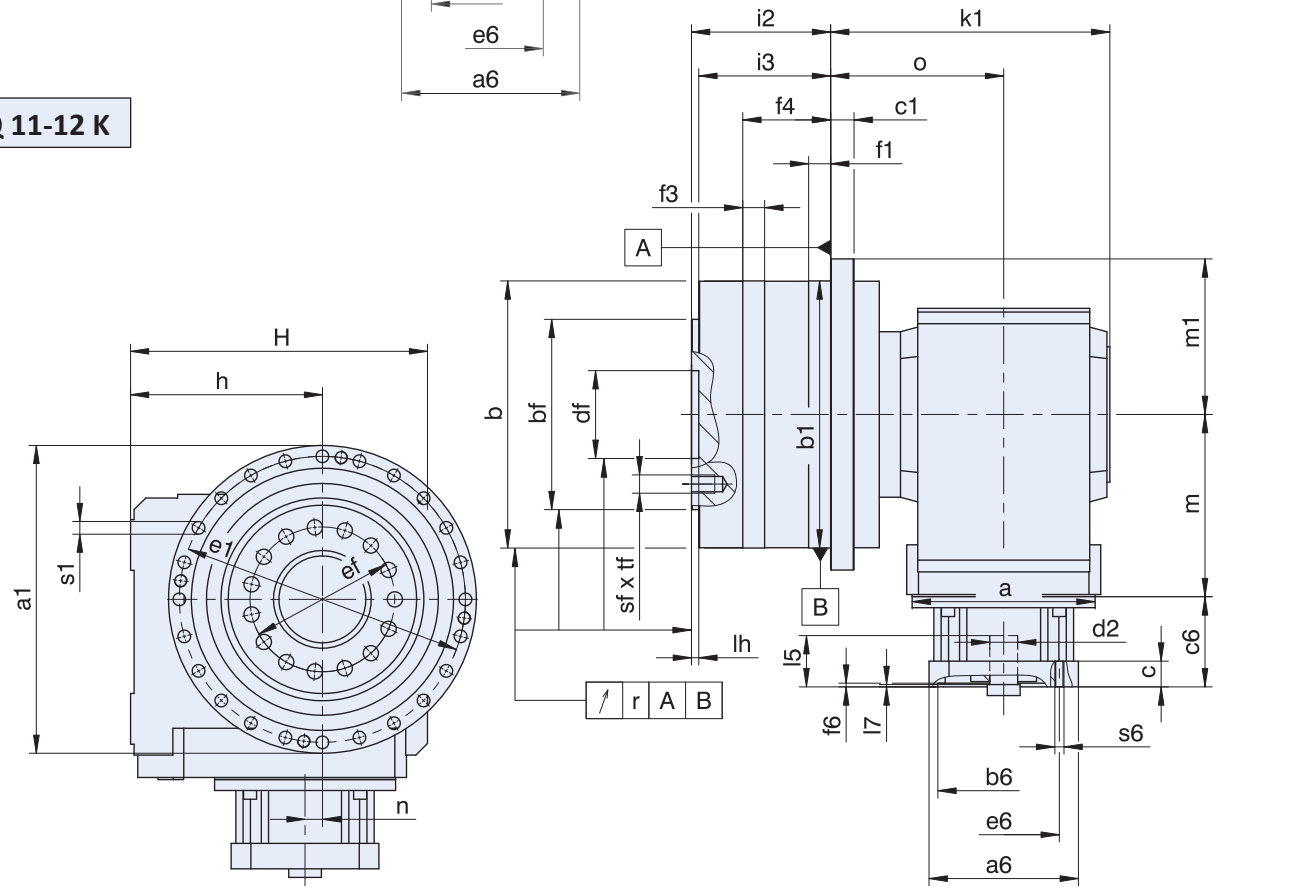

Dimensional Data

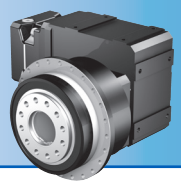

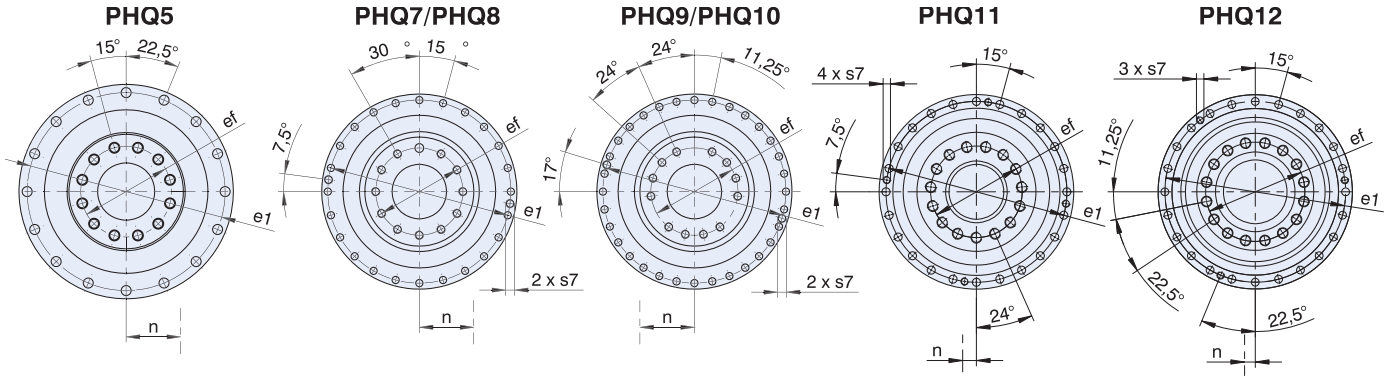

Table 1 Dimensions (mm)

Unit	Øa1	Øb	Øb1	Øbf	c1	Ødf	Øe1	Øef	f1	f3	f4	h	H	i2	i3	k1	lh	m1	o	r	Øs1	s7	sf	tf
PHQ531_K102	145	–	110^{h7}	80^{h7}	8	40^{H6}	135	63	12	–	–	60	160	29	23	180.0	6	72.5	124.0	0.020	5.5	–	M8	12
PHQ731_K202	179	–	140^{h7}	100^{h7}	10	50^{H6}	168	80	12	–	–	65	190	38	32	211.0	6	89.5	141.0	0.025	6.6	–	M10	16
PHQ831_K402	247	–	200^{h7}	160^{h7}	12	80^{H6}	233	125	15	–	–	90	240	50	42	289.0	8	123.5	199.0	0.030	9.0	M10	M12	17
PHQ941_K513	300	–	255^{h7}	180^{h7}	18	90^{H6}	280	145	20	–	–	160	260	66	55	292.5	12	150.0	196.5	0.030	13.5	M8	M20	28
PHQ1041_K713	330	–	285^{h7}	200^{h7}	20	95^{H6}	310	166	20	–	–	212	342	75	60	354.5	10	165.0	238.0	0.040	13.5	M10	M24	35
PHQ1141_K813	425	365^{g6}	365^{h6}	260^{h7}	32	120^{H6}	395	200	30	30	120	265	410	190	180	381.5	10	212.5	236.5	0.040	17.5	M16	M24	35.5
PHQ1241_K913	550	470^{g6}	470^{h6}	330^{h7}	45	180^{H7}	510	280	30	30	145	315	495	206.5	195.5	452.0	10	275.0	282.0	0.040	22.0	M16	M30	47
PHQ1241_K914	550	470^{g6}	470^{h6}	330^{h7}	45	180^{H7}	510	280	30	30	145	315	495	206.5	195.5	452.0	10	275.0	282.0	0.040	22.0	M16	M30	47

Motor Mounting Plate

Table 2 Dimensions (mm)

Base Module	Motor Adapter Code															Wt. lbs.
	ME10			ME20			ME30			ME40			ME50			
	a	m	n	a	m	n	a	m	n	a	m	n	a	m	n	
PHQ531_K102	98	124	36	115	128	36	–	–	–	–	–	–	–	–	–	43
PHQ731_K202	98	143	46	115	147	46	145	149	46				–	–	–	69
PHQ831_K402	–	–	–	160	187	60	145	189	60	190	192	60	–	–	–	116
PHQ941_K513	–	–	–	160	172	15	145	174	15	190	177	15	–	–	–	213
PHQ1041_K713	–	–	–	–	–	–	200	221	20	190	224	20	300	237	20	310
PHQ1141_K813	–	–	–	–	–	–	200	247	24	250	249	24	300	262	24	
PHQ1241_K913	–	–	–	–	–	–	–	–	–	250	294	25	300	307	25	
PHQ1241_K914	–	–	–	–	–	–	200	353	25	250	365	25	–	–	–	

KS Series: RIGHT ANGLE – Versatile Outputs

KS Features

- 6:1 to 200:1 ratios (higher ratios available. Contact STOBER.)
- Quiet running (<62dB(A))
- Flexilibity for mounting
- Adaptability: shafts available in metric and imperial to meet your requirements
- Large motor input option to accept bigger diameter motor shafts so you don't use an oversized gearbox
- Error free motor mounting and quick changeover with toleranced pilot on motor plate
- Low no load running torque, giving you more torque for your application
- Magnetic oil filtration to remove contaminants to prevent breakdowns
- Build and ship in one day
- Assembled in the USA

STOBER KS Series uses helical and bevel gearing to provide a low backlash unit, that is smooth running, with high efficiency, high power density, and high input speed capacity. The KS also offers flexibly with three output options: shaft, flange, and hollow. Every gearbox is made to order. STOBER will custom whatever you need to fit your application. Contact us today to learn more.

SHIPS in 1 DAY!
NO EXPEDITE FEE FOR 24 HOUR SERVICE

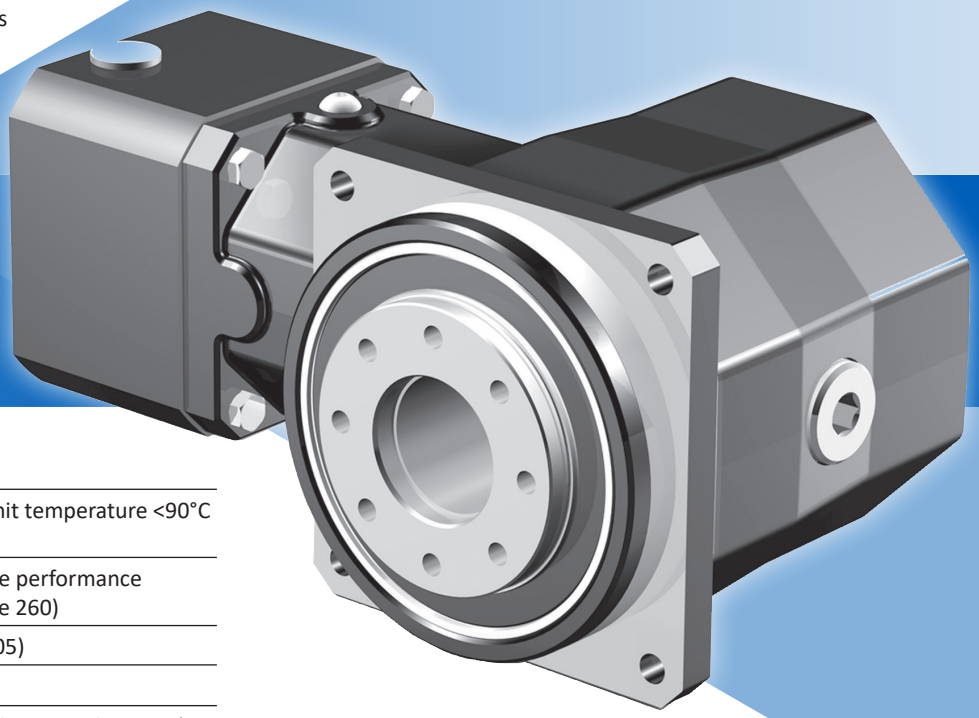

General Specifications

Ambient Temperature	0°C to +40°C (104°F) [Unit temperature <90°C Max]
Backlash	≤4 standard arcmins (see performance overview chart, see page 260)
Coating	Standard Black (RAL-9005)
Degree of Protection	IP65
Direction of Rotation	Input and output rotate the SAME direction (see page 260)
Efficiency	2 stage 95%; 3 stage 93%;
Input RPM	Up to 6,000 RPM
Installation	Requires 12.9 fasteners for tapped holes housing. See page 288, for more information
Lubrication	Lubricated for life – standard Mobil SHC629; option food grade Mobil SHC CIBUS 150
Mounting Position	Must be specified, see page 261
Warranty	5 Year Limited (2 Years on normal wear items: bearings, seals, etc.)

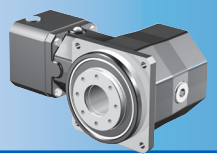

Overview

Selection Options *At-a-Glancee*

Using the **Selection Data** table later in this section, select the KS Series Gearhead with the appropriate performance and design options tailored to your motor choice and exact application requirements. Use the part number guide below as a reference to build a part number for the complete gearhead assembly.

Part Number Examples:

1	2	3	4	5	6	7	8	9		
KS	4	0	2	P	F	0060	ME	L	EL1	*

	Design Option	Part Number Code	Description
1	**Series**	KS	Concentric helical
2	**Size**	4 5 7	3 sizes of gearhead
3	**Generation**	0	Version of gearhead
4	**# of Stages**	2 3	Two stage for ratios ≤20:1 Three stage for ratios >20:1
5	**Output**	P G F S	Shaft with key Plain shaft (no key) Flanged hollow Shrink ring
6	**Housing**	F	Standard
7	**Ratio**	0060	Ratios range from 6:1 to 200:1 (0060=6:1; 0200=20:1; 2000=200:1)
8	**Motor Adapter**	ME	ME Motor adapter (See also motor mounting plate option, page 261)
0	**Options**	L	Large Input
*	**Mounting Position**	EL1 EL2 EL3 EL4 EL5 EL6	Required special instruction for all units, see page 261

Options

Coating Option

- Available with multi-layer, industrial 316 stainless steel epoxy coating. Contact factory for this option.

Large Input

- Accommodates a larger diameter motor shaft without going to a larger size gearbox.

ATEX

- ATmosphere EXplosible – rated for explosive environments. Contact factory for this option and allow additional time for delivery.

Oil Reservoir

- Use with 3 stage units (for vertical EL5 orientation, see page 260).

KS Performance Overview

KS Series performance is dependent on several factors including duty cycle, bearing design, gearhead size and stage configuration, among others. Use the chart below for preliminary evaluation, then use the following performance chart and selection information on the following pages for specific performance sizing and selection.

Size/Generation		KS40		KS50		KS70	
# of Stages		2	3	2	3	2	3
Acceleration Torque M_{2BMAX}	Nm	90		200		400	
Output Torque Nom. [1] M_{2N}	Nm	65		125		250	
Torsional Stiffness C_2	Nm/arcmin	≤8.5		≤17		≤42	
Torsional Backlash [2] $\Delta\phi$	arcmin	≤6		≤5		≤4	
Input Speed Max. n_{1MAX}	Continuous Cyclic	4000 6000	4500 6000	3500 6000	4200 6000	3200 6000	4000 6000
Efficiency (@nom torque)	%	95	93	95	93	95	93
Weight	kg lbs	8.4 18.5	8.2 18.1	13.6 30	14.4 31.8	26.8 59.1	28.1 62
Noise [3]	dB(A)	≤65		≤62		≤63	

Performance by Output Option (P = Shaft with Key; G = Shaft without Key; F = Flanged Hollow Output; S = Shrink Ring) [4]

Size/Generation			KS40	KS50	KS70
Axial Load Max. F_{2AMAX}	**P/G**	N	3400	6000	10,000
	F	N	4000	6000	10,000
	S	N	4000	6000	10,000
Radial Load Max. F_{2RMAX}	**P/G**	N	5000	8000	10,000
Tilting Moment Max. M_{2KMAX}	**F/S**	Nm	210	460	780

[1] *Ratings based on input speed (n_1) of 1500 RPM.*

For torque at higher input speeds (M_{2NX}) solve the formula:
where n_1 = Actual Input Speed.

$$M_{2NX} = \frac{M_{2N}}{\sqrt[3]{\frac{n_1}{1500}}}$$

[2] *Tested at 1.5% of nominal torque and recorded on the output side of the gearhead. For lower backlash, contact STOBER technical support.*

[3] *Measurement at one (1) meter distance with input speed (n_1) of 2000 RPM.*

[4] *Rating based on output speed (n_2) of 100 RPM. For values at other speeds see page 262.*

KS Direction of Rotation

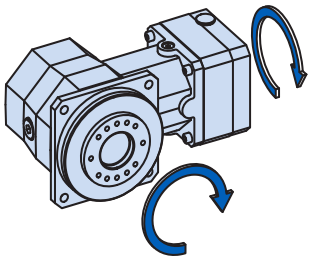

Oil Reservoir Orientation

For 3 stage units in vertical EL5 mounting position — not available with large input option

When ordering, Side 1 or Side 2 MUST BE SPECIFIED.

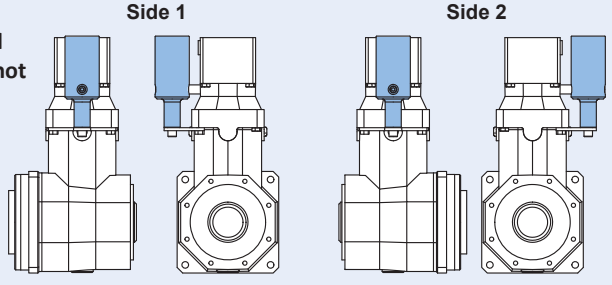

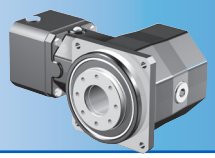

Overview

KS Series Motor Mounting Plate Option (Motor information required with Motor Adapter ME option)

STOBER Servo Gearheads fit the motor of your choice with the appropriate motor mounting plate assembled between the motor and the gearhead.

NOTE: When ordering a gearhead:

- Specify the motor manufacturer and part number
- Provide the motor drawing with dimensions, or specify the motor mounting dimensions (per the list shown at right)

For a precise dimension on a specific motor, or for general assistance, we recommend you contact STOBER Technical Support.

Customer Required Dimensions for Properly Sized Motor Mounting Plate

d2	Motor Shaft Diameter (If an adapter bushing is required it will be supplied with the motor plate.)
b6	Pilot Diameter
e6	Bolt Circle Diameter
s6	Bolt Diameter
l5	Motor Shaft Length
f6	Pilot Length
a6	Square Flange (Optional – motor plate will typically be made to match this dimension.)

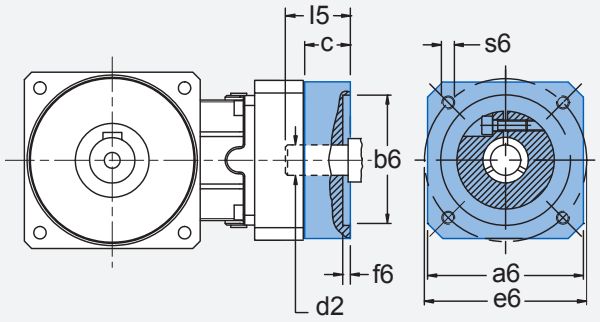

Motor Mounting Plate Dimensions — mm (Gearhead Part Number Specific)	KS403	KS402 KS403...L KS503	KS402...L KS502 KS503...L KS703	KS502...L KS702 KS703...L	KS702...L
Maximum Allowed Motor Shaft Dia. d2	14	19	24	32	38
Minimum Allowed Motor Plate Thickness c	15	18	21	24	25

** Note that the c motor plate thickness is determined by the motor shaft length. The minimum motor plate thickness is the value listed.*

KS Series Motor Mounting Plate Access Hole

Access to the clamping screw for the motor coupling is located on the 270° side of the motor mounting plate at the location shown. If necessary, the motor mounting plate can be rotated in the field, if a 0°, 90° or 180° orientation for the access hole is desirable.

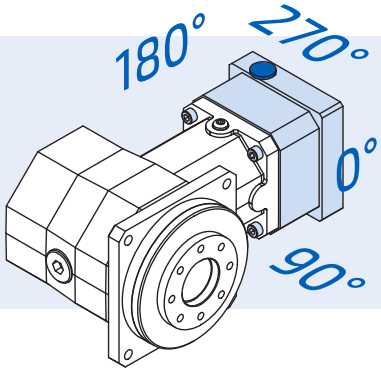

KS Mounting Position Options

KS Units can be mounted in any of the positions illustrated below.

When ordering KS units mounted in a vertical position (EL3) or in a horizontal position (EL5), the mounting position MUST BE SPECIFIED. NOTE: EL5 3 stage units are only available with the oil reservoir option.

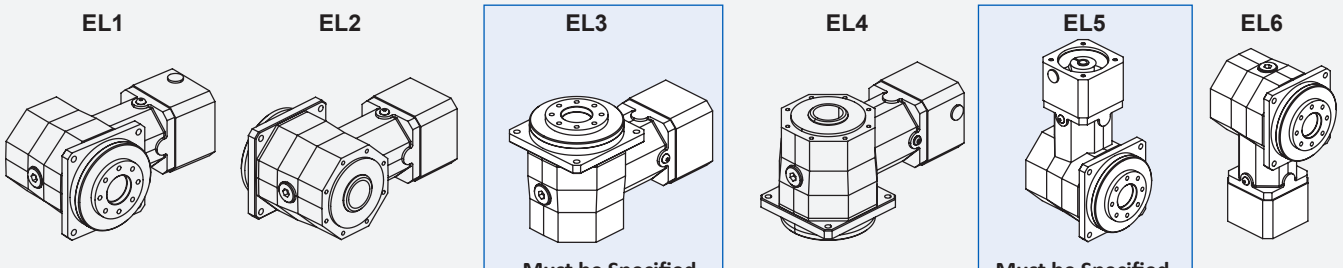

Permissible Motor Tilting Torque

The permissible tilting torque of the motor attached to the gear unit is a result of the static and dynamic load "F" from the motor weight, mass acceleration, and vibration multiplied by the distance from the center of gravity "l_S" of the motor.

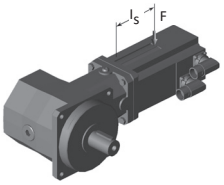

$$M_{1k} = F \times l_S \leq M_{1K}$$

M_{1K}	KS403	KS402 KS503	KS502 KS703	KS702
Nm	10	20	40	80

Permissible Output Shaft Load and Tilting Moments*

Unit	Z_2 mm	F_{2A} N	F_{2R} N	F_{2RB} N	M_{2K} Nm	M_{2KB} Nm
P/G Solid Shaft (with/without key						
KS4	34	3400	5000	5000	260	260
KS5	40	6000	8000	8000	550	550
KS7	51	10,000	10,000	10,000	920	920
F Flange Hollow Output						
KS4	38	4000	6842	10,263	260	390
KS5	45	6000	12,222	18,333	550	825
KS7	55	10,000	16,727	25,091	920	1380
S Hollow Output with Shrink Ring						
KS4	36	4000	5000	5000	260	260
KS5	42	6000	8000	8000	550	550
KS7	52	10,000	10,000	10,000	920	920

** Refer to illustration and definitions below.*

During EMERGENCY OFF operation (maximum stops per gearhead = 1000) the permissible values in the table for F_{2A}, F_{2R}, and M_{2K} can be multiplied by a factor of 2.

KS Series Load/Life/Speed Calculations

All formulas shown are based on METRIC values

Upper case letters are permissible values. Lower case letters are for existing values.

The permissible load and tilting moment values are based on an output speed of 100 RPM. For higher speeds the following applies, where n_2 is the desired speed:

$$F_{2axN} = \frac{F_{2ax100}}{\sqrt[3]{\frac{n_{2m*}}{100\ rpm}}} \qquad F_{2radN} = \frac{F_{2rad100}}{\sqrt[3]{\frac{n_{2m*}}{100\ rpm}}} \qquad M_{2kN} = \frac{M_{2k100}}{\sqrt[3]{\frac{n_{2m*}}{100\ rpm}}}$$

The application output tilting moment should be determined by the following formula:

Output P & G

$$M_{2k,acc*} = \frac{2 \bullet F_{2ax100*} \bullet y_2 + F_{2rad,acc*} \bullet (x_2 + Z_2)}{1000} \leq M_{2k,acc}$$

Output F & S

$$M_{2k,acc*} = \frac{F_{2ax100*} \bullet y_2 + F_{2rad,acc*} \bullet (x_2 + Z_2)}{1000} \leq M_{2k,acc}$$

$$M_{2k,eq*} = \sqrt[3]{\frac{n_{2m,1*} \bullet t_{1*} \bullet M_{2k,acc,1*}{}^3 + \ldots + n_{2m,n*} \bullet t_{n*} \bullet M_{2k,acc,n*}{}^3}{n_{2m,1*} \bullet t_{1*} + \ldots + n_{2m,n*} \bullet t_{n*}}} \leq M_{2kN}$$

$$F_{2ax,eq*} = \sqrt[3]{\frac{n_{2m,1*} \bullet t_{1*} \bullet F_{2rad,acc,1*}{}^3 + \ldots + n_{2m,n*} \bullet t_{n*} \bullet F_{2rad,acc,n*}{}^3}{n_{2m,1*} \bullet t_{1*} + \ldots + n_{2m,n*} \bullet t_{n*}}} \leq F_{2radN}$$

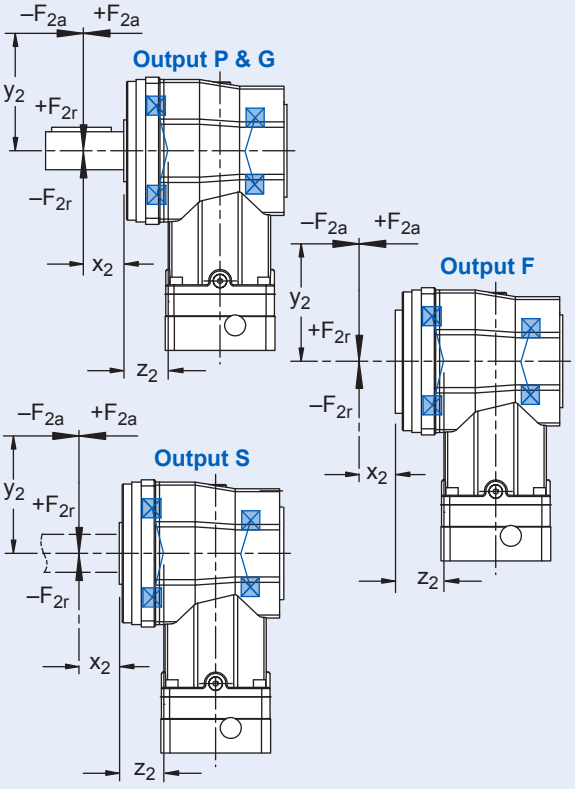

Where:

z_2	Distance of Shaft Shoulder to Center of Output Bearing	$F_{2rad100}$	Permitted Radial Force ≤100RPM
n_2	Actual Average Output Speed	$F_{2rad,acc}$	Radial Acceleration Force
x_2	Distance of the Shaft Shoulder to the Force Application Point	$F_{2rad,acc*}$	Radial Acceleration Force at Gear Unit Output
y_2	Distance of the Shaft Axis to the Axial Force Application Point	M_{2K100}	Permitted Tilting Torque ≤100RPM
F_{2ax*}	Actual Axial Force at Gear Unit Output	$M_{2K,acc}$	Permitted Acceleration Tilting Torque
F_{2ax100}	Permitted Axial Force	$M_{2k,acc*}$	Permitted Acceleration Tilting Torque at Gear Unit Output
		C_{2K}	Tilting Stiffness

The hours of life (L_h) of the unit can be determined by the following formula:

bearing life for duty cycle ≤ 40%

L_h > 10,000 hours if $M_{2K100}/M_{2A*} < 1.25$ and > 1
L_h > 20,000 hours if $M_{2K100}/M_{2A*} > 1.25$ and > 1.5
L_h > 30,000 hours if $M_{2K100}/M_{2A*} < 1.5$

bearing life for duty cycle ≥ 40%

$$L_{hA} = L_h \left(\frac{40\%}{\text{Duty Cycle}} \right)$$

Selection Data

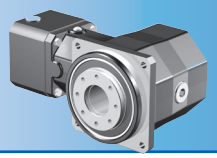

Exact Ratio (i)	Output Torque: Nom. [1] M_{2N} Nm	Output Torque: Accel. M_{2acc} Nm	Output Torque: Peak [2] M_{2NOT} Nm	Backlash $\Delta\phi_2$ arcmin	Part Number* (Gearhead + Input)	Max. Input Speed RPM (n1): Cont.	Max. Input Speed RPM (n1): Cyclic	Motor Shaft Max Ø d_{MW} mm	Input Inertia [3] J_1 kgcm²	Tors. Stiffness C_2 Nm/arcmin
KS4										
6.000	60	90	140	6	KS402_0060ME	3000	6000	19	1.1	8.1
					KS402_0060MEL			24	1.5	8.4
8.000	65	90	140	6	KS402_0080ME	3500	6000	19	0.7	8.3
					KS402_0080MEL			24	1.2	8.4
10.00	65	90	140	6	KS402_0100ME	3800	6000	19	0.6	8.3
					KS402_0100MEL			24	1.1	8.4
14.00	65	90	140	6	KS402_0140ME	4000	6000	19	.47	8.4
					KS402_0140MEL			24	0.96	8.5
20.00	60	90	140	6	KS402_0200ME	4000	6000	19	0.43	8.5
					KS402_0200MEL			24	0.9	
24.00	60	90	140	6	KS403_0240ME	3500	6000	14	0.2	8.5
					KS403_0240MEL			19	0.5	
32.00	65	90	140	6	KS403_0320ME	3500	6000	14	0.2	8.5
					KS403_0320MEL			19	0.5	
40.00	65	90	140	6	KS403_0400ME	3500	6000	14	0.2	8.5
					KS403_0400MEL			19	0.5	
50.00	65	90	140	6	KS403_0500ME	4000	6000	14	0.1	8.5
					KS403_0500MEL			19	0.4	
70.00	65	90	140	6	KS403_0700ME	4500	6000	14	0.1	8.5
					KS403_0700MEL			19	0.4	
80.00	65	90	140	6	KS403_0800ME	4500	6000	14	0.1	8.5
					KS403_0800MEL			19	0.4	
100.0	65	90	140	6	KS403_1000MET	4500	6000	14	0.1	8.5
					KS403_1000MEL			19	0.4	
140.0	65	90	140	6	KS403_1400ME	4500	6000	14	0.1	8.5
					KS403_1400MEL			19	0.4	
200.0	60	90	140	6	KS403_2000ME	4500	6000	14	0.1	8.5
					KS403_2000MEL			19	0.4	

[1] *Based on input speed of 2000 RPM. See page 260 for details on torque calculations.*
[2] *Maximum momentary torque for emergency stops or heavy shock load. (Admissible stops per life of gearhead = 1,000 stops maximum.)*
[3] *Inertia based on maximum input. For lower inertia, using smaller diameter input, contact STOBER.*
* *MT = Motor Adapter L = Large Input Option*

Exact Ratio (i)	Output Torque Nom. [1] M_{2N} Nm	Output Torque Accel. M_{2acc} Nm	Output Torque Peak [2] M_{2NOT} Nm	Backlash $\Delta\phi_2$ arcmin	Part Number* (Gearhead + Input)	Max. Input Speed RPM (n1) Cont.	Max. Input Speed RPM (n1) Cyclic	Motor Shaft Max Ø d_{MW} mm	Input Inertia [3] J_1 kgcm²	Tors. Stiffness C_2 Nm/arcmin
KS5										
6.000	100	200	300	5	KS502_0060ME	2500	5500	24	2.5	16.0
					KS502_0060MEL			32	4.1	17.0
8.000	125	200	300	5	KS502_0080ME	2800	6000	24	1.9	17.0
					KS502_0080MEL			32	3.5	
10.00	125	200	300	5	KS502_0100ME	3000	6000	24	1.5	17.0
					KS502_0100MEL			32	3.1	
14.00	125	200	300	5	KS502_0140ME	3200	6000	24	1.1	17.0
					KS502_0140MEL			32	2.8	
20.00	120	200	300	5	KS502_0200ME	3500	6000	24	1.0	17.0
					KS502_0200MEL			32	2.6	
24.00	100	200	300	5	KS503_0240ME	3100	6000	19	0.6	17.0
					KS503_0240MEL			24	1.1	
32.00	125	200	300	5	KS503_0320ME	3100	6000	19	0.6	17.0
					KS503_0320MEL			24	1.1	
40.00	125	200	300	5	KS503_0400ME	3100	6000	19	0.6	17.0
					KS503_0400MEL			24	1.1	
50.00	125	200	300	5	KS503_0500ME	3500	6000	19	0.5	17.0
					KS503_0500MEL			24	1.0	
70.00	125	200	300	5	KS503_0700ME	4200	6000	19	0.4	17.0
					KS503_0700MEL			24	0.9	
80.00	125	200	300	5	KS503_0800ME	4200	6000	19	0.4	17.0
					KS503_0800MEL			24	0.9	
100.0	125	200	300	5	KS503_1000ME	4200	6000	19	0.4	17.0
					KS503_1000MEL			24	0.9	
140.0	125	200	300	5	KS503_1400ME	4200	6000	19	0.4	17.0
					KS503_1400MEL			24	0.9	
200.0	120	200	300	5	KS503_2000ME	4200	6000	19	0.4	17.0
					KS503_2000MEL			24	0.9	

[1] *Based on input speed of 2000 RPM. See page 260 for details on torque calculations.*
[2] *Maximum momentary torque for emergency stops or heavy shock load. (Admissible stops per life of gearhead = 1,000 stops maximum.)*
[3] *Inertia based on maximum input. For lower inertia, using smaller diameter input, contact STOBER.*
* *MT = Motor Adapter L = Large Input Option*

Selection Data

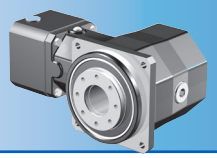

Exact Ratio (i)	Output Torque: Nom. [1] M_{2N}	Output Torque: Accel. M_{2acc}	Output Torque: Peak [2] M_{2NOT}	Backlash $\Delta\phi_2$	Part Number* (Gearhead + Input)	Max. Input Speed RPM (n1): Cont.	Max. Input Speed RPM (n1): Cyclic	Motor Shaft Max Ø d_{MW}	Input Inertia [3] J_1	Tors. Stiffness C_2
	Nm	Nm	Nm	arcmin				mm	kgcm²	Nm/arcmin
KS7										
6.000	240	400	600	4	KS702_0060ME	2100	4500	32	8.3	40.0
					KS702_0060MEL			38	12.0	41.0
8.000	250	400	600	4	KS702_0080ME	2500	5000	32	5.5	41.0
					KS702_0080MEL			38	9.2	
10.00	250	400	600	4	KS702_0100ME	2800	6000	32	4.4	41.0
					KS702_0100MEL			38	8.2	42.0
14.00	250	400	600	4	KS702_0140ME	3000	6000	32	3.4	42.0
					KS702_0140MEL			38	7.1	
20.00	250	400	600	4	KS702_0200ME	3200	6000	32	2.9	42.0
					KS702_0200MEL			38	6.7	
24.00	240	400	600	4	KS703_0240ME	3000	6000	24	1.6	42.0
					KS703_0240MEL			32	3.2	
32.00	250	400	600	4	KS703_0320ME	3000	6000	24	1.5	42.0
					KS703_0320MEL			32	3.1	
40.00	250	400	600	4	KS703_0400ME	3000	6000	24	1.4	42.0
					KS703_0400MEL			32	3.0	
50.00	250	400	600	4	KS703_0500ME	3200	6000	24	1.2	42.0
					KS703_0500MEL			32	2.8	
70.00	250	400	600	4	KS703_0700ME	3500	6000	24	1.0	42.0
					KS703_0700MEL			32	2.6	
80.00	250	400	600	4	KS703_0800ME	4000	6000	24	0.9	42.0
					KS703_0800MEL			32	2.6	
100.0	250	400	600	4	KS703_1000ME	4000	6000	24	0.9	42.0
					KS703_1000MEL			32	2.6	
140.0	250	400	600	4	KS703_1400ME	4000	6000	24	0.9	42.0
					KS703_1400MEL			32	2.5	
200.0	250	400	600	4	KS703_2000ME	4000	6000	24	0.9	42.0
					KS703_2000MEL			32	2.5	

[1] *Based on input speed of 2000 RPM. See page 260 for details on torque calculations.*
[2] *Maximum momentary torque for emergency stops or heavy shock load. (Admissible stops per life of gearhead = 1,000 stops maximum.)*
[3] *Inertia based on maximum input. For lower inertia, using smaller diameter input, contact STOBER.*
* *MT = Motor Adapter L = Large Input Option*

Shaft Output — "P" (with key) & "G" (without key)

With Standard Input

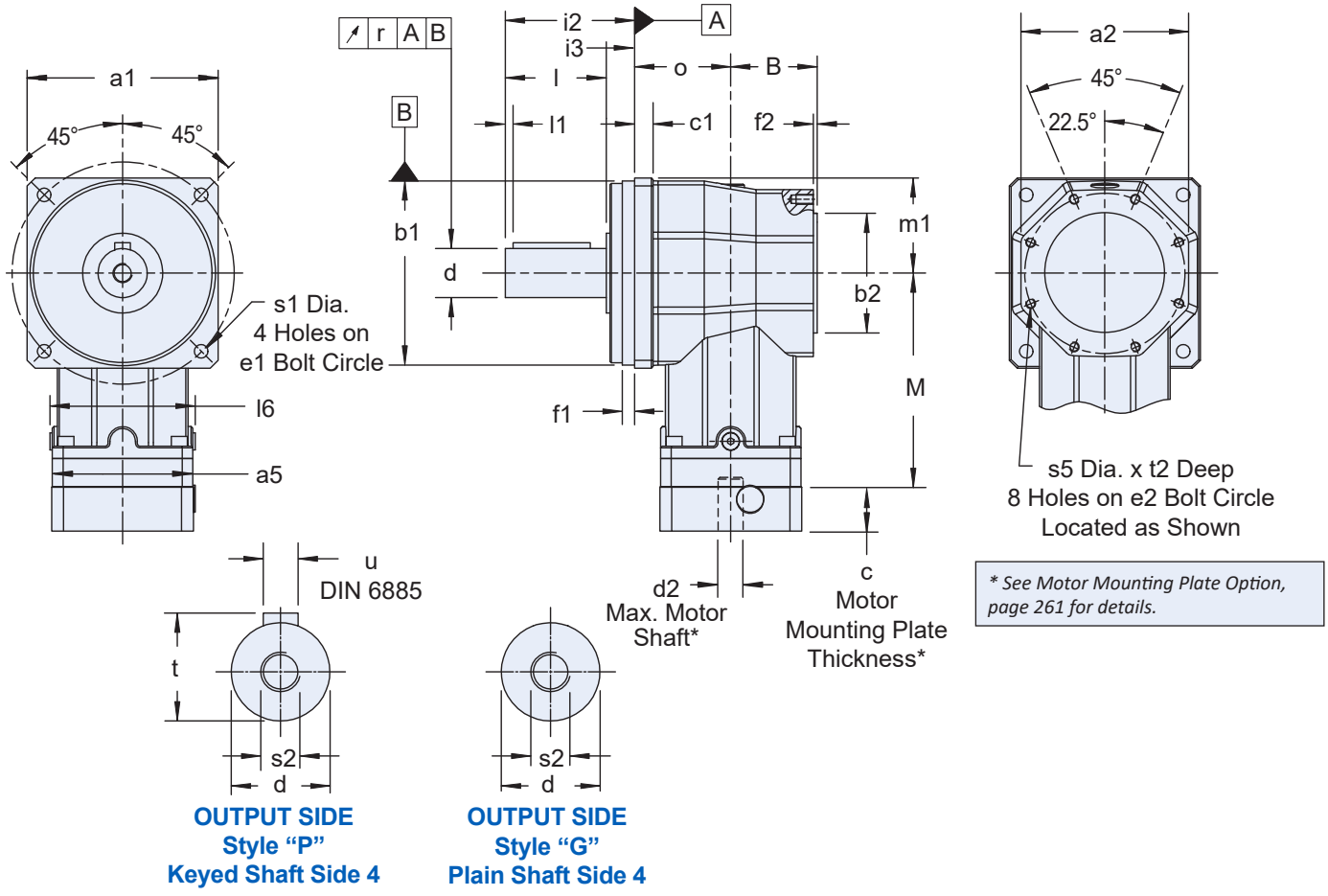

** See Motor Mounting Plate Option, page 261 for details.*

With Large Input Option

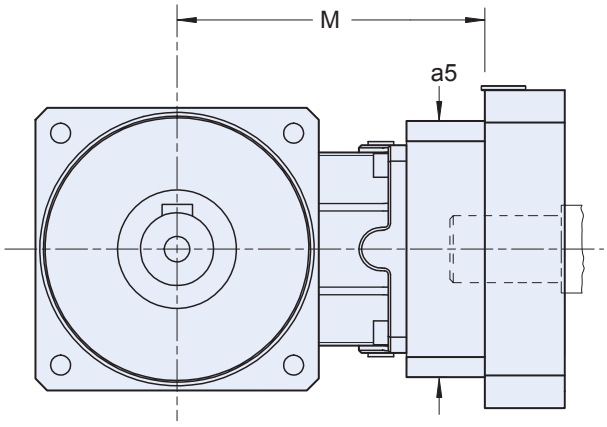

Oil Reservoir

(For 3 stage units in vertical EL5 mounting position) — not available with large input option

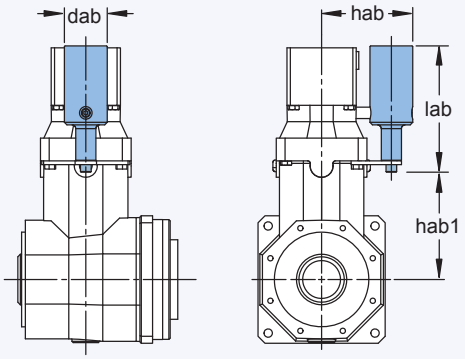

Dimensional Data

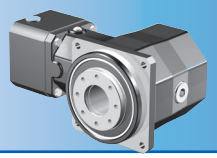

Table 1 Dimensions (mm)

Unit	a1	a2	B	b1	h6	b2	h6	c1	d	k6	e1	e2
KS4	101	93	51	95	+0.000/-0.022	75	+0.000/-0.019	10	22	+0.015/+0.002	120	88
KS5	125	109	58	120	+0.000/-0.022	90	+0.000/-0.022	10	32	+0.018/+0.002	145	105
KS7	155	135	70	150	+0.000/-0.025	110	+0.000/-0.022	15	40	+0.018/+0.002	180	130

Table 2 Dimensions (mm)

Unit	f1	f2	i2	i3	l	l1	l6	m1	o	r	s1	s2	s5	t	t2	u
KS4	8	3	52	14.0	36	3	77.5	50.5	53	0.020	6.6	M8	M5x0.80	24.5	9	A6x6x28
KS5	9	3	75.5	15.5	58	3	98	62.5	62	0.020	9	M12	M6x1.00	35	11	A10x8x50
KS7	10	3	105	20.0	82	4	120	77.5	78	0.025	11	M16	M8x1.25	43	14	A12x8x70

Table 3 Dimensions (mm)

Standard Input			Large Input		
Unit	a5	M	Unit	a5	M
KS402	72	137.5	KS402_L	100	141.5
KS403	55	161.0	KS403_L	75	177.5
KS502	98	158.0	KS502_L	115	166.5
KS503	72	205.5	KS503_L	100	209.5
KS702	115	191.0	KS702_L	145	205.0
KS703	98	240.5	KS703_L	115	249.0

Table 4 Oil Reservoir Dimensions (mm)

Unit Type	dab	hab	hab1	lab
KS403	34	74.5	85	100
KS503	39	92	105	122
KS703	49	109.5	132	134

Flanged Hollow Output — "F"

With Standard Input

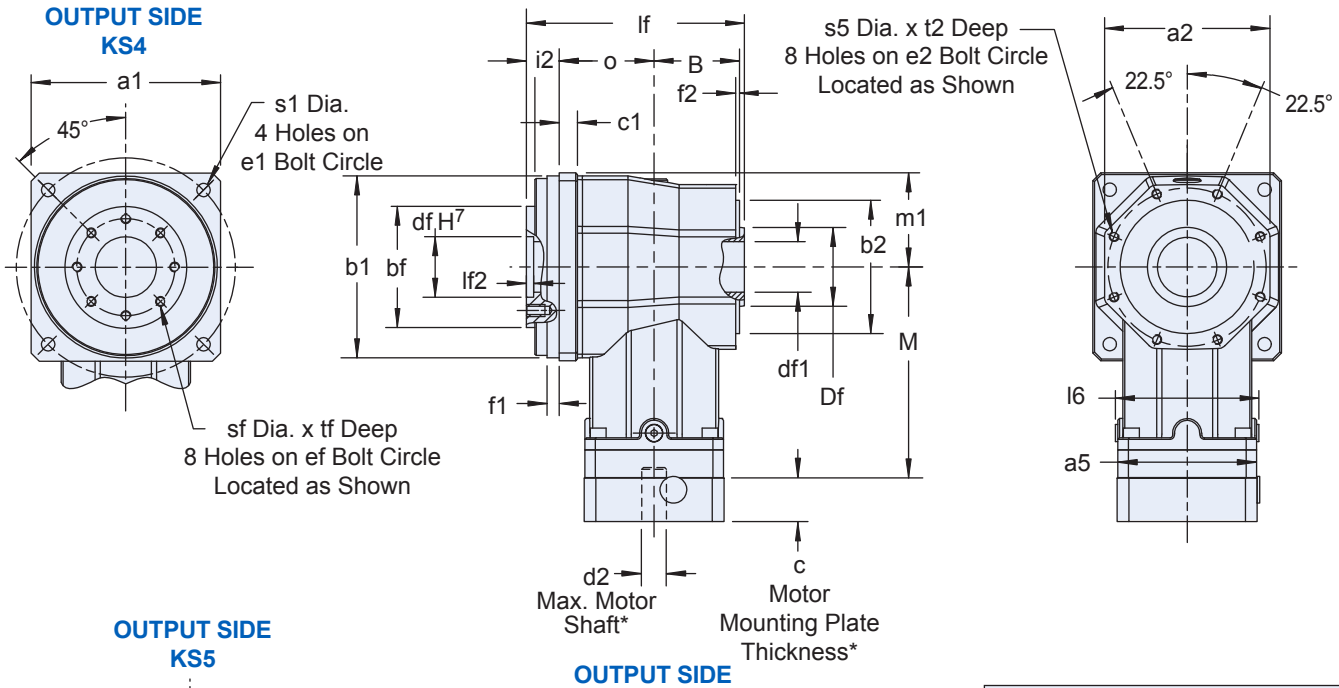

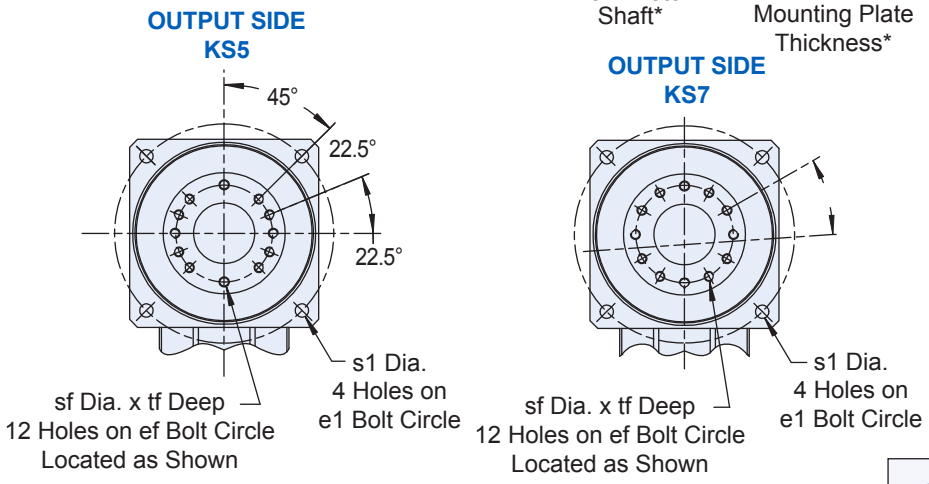

** See Motor Mounting Plate Option, page 261 for details.*

With Large Input Option

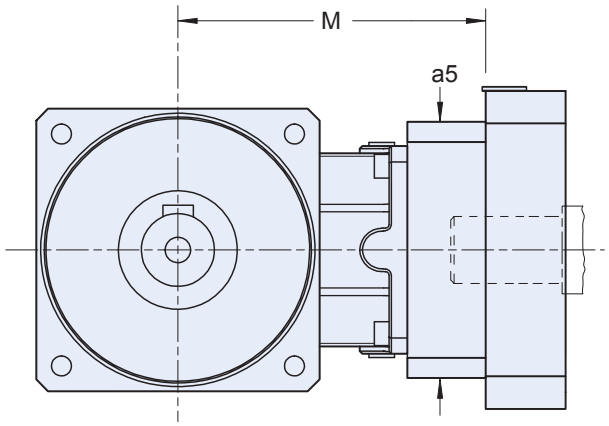

Oil Reservoir

(For 3 stage units in vertical EL5 mounting position) — not available with large input option

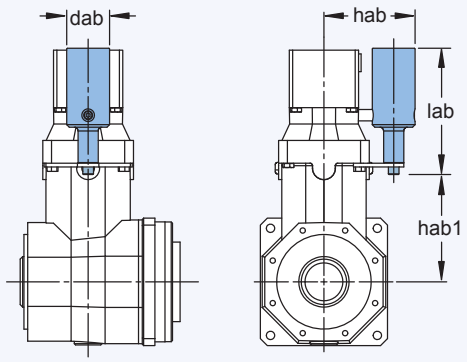

Dimensional Data

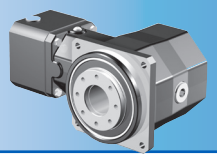

Table 1 Dimensions (mm)

Unit	a1	a2	B	b1	h6	b2	h6	bf	h7	c1	Df	d^{9}	df	H^{7}	df1
KS4	101	93	51	95	+0.000/-0.022	75	+0.000/-0.019	63	+0.000/-0.030	10	40	-0.080/-0.180	31.5	+0.025/-0.0	30
KS5	125	109	58	120	+0.000/-0.022	90	+0.000/-0.022	80	+0.000/-0.030	10	48	-0.080/-0.180	40	+0.025/-0.0	38
KS7	155	135	70	150	+0.000/-0.025	110	+0.000/-0.022	100	+0.000/-0.035	15	60	-0.100/-0.174	50	+0.025/-0.0	49

Table 2 Dimensions (mm)

Unit	e1	e2	ef	f1	f2	i2	l6	lf	lf2	m1	o	s1	s5	sf	t2	tf
KS4	120	88	50	8	3	20	77.5	127	6	50.5	53	6.6	M5x0.80	M6x1.00	9	11
KS5	145	105	63	9	3	22	98	145	6.5	62.5	62	9	M6x1.00	M6x1.00	11	12
KS7	180	130	80	10	3	27	120	178	7	77.5	78	11	M8x1.25	M8x1.25	14	15

Table 3 Dimensions (mm)

Standard Input			Large Input		
Unit	a5	M	Unit	a5	M
KS402	72	137.5	KS402_L	100	141.5
KS403	55	161.0	KS403_L	75	177.5
KS502	98	158.0	KS502_L	115	166.5
KS503	72	205.5	KS503_L	100	209.5
KS702	115	191.0	KS702_L	145	205.0
KS703	98	240.5	KS703_L	115	249.0

Table 4 Oil Reservoir Dimensions (mm)

Unit Type	dab	hab	hab1	lab
KS403	34	74.5	85	100
KS503	39	92	105	122
KS703	49	109.5	132	134

Shrink Ring Output — "S"

With Standard Input

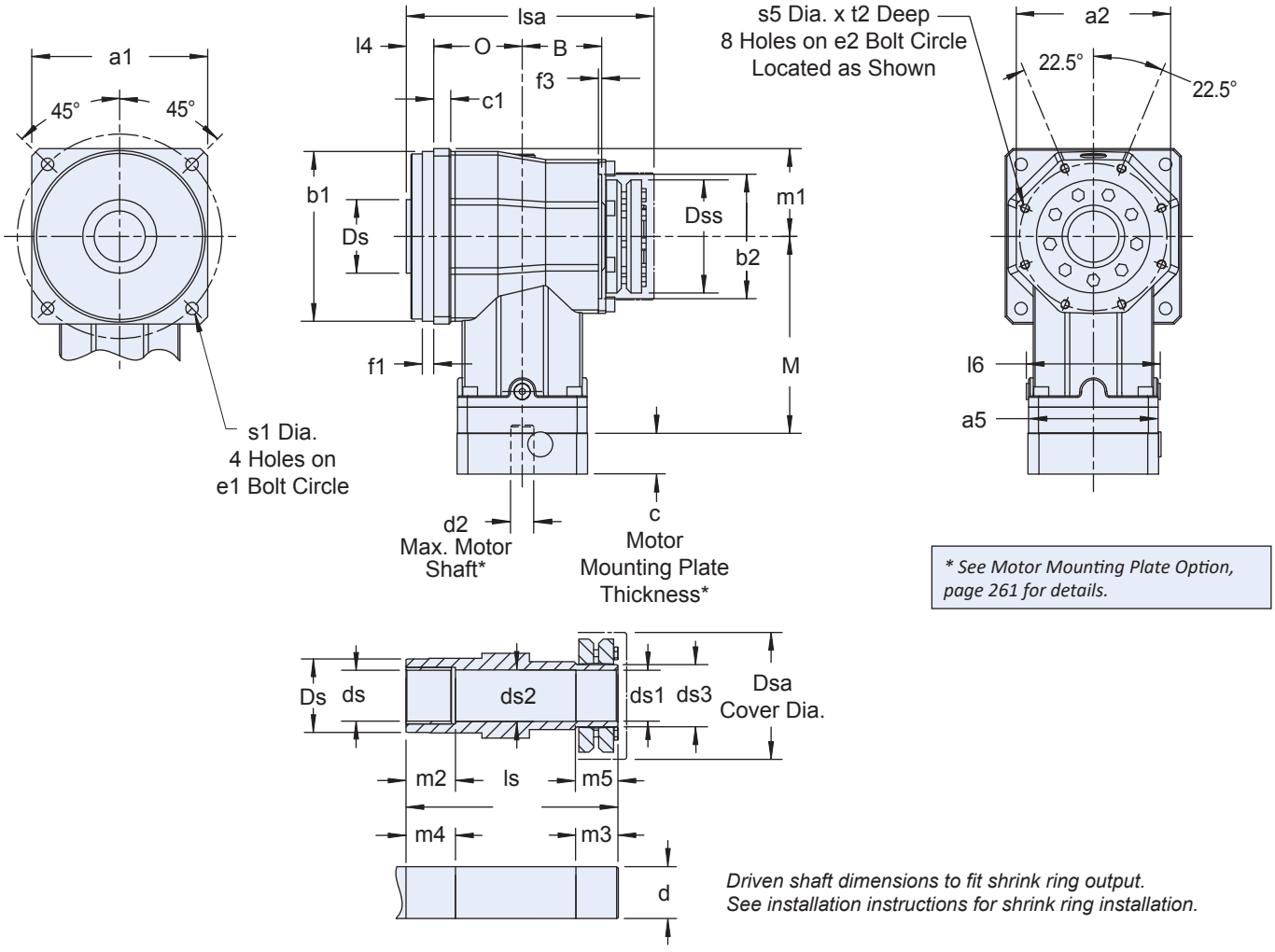

** See Motor Mounting Plate Option, page 261 for details.*

Driven shaft dimensions to fit shrink ring output.
See installation instructions for shrink ring installation.

With Large Input Option

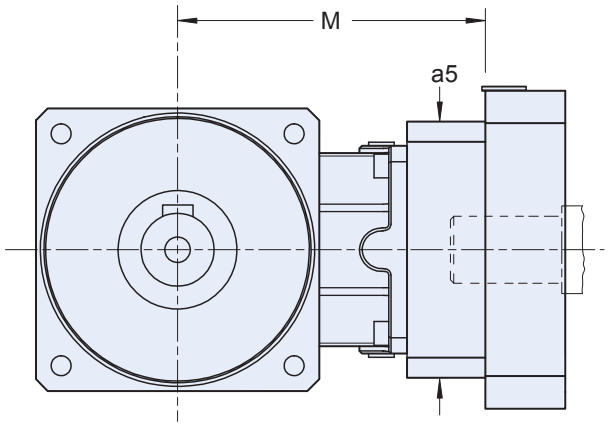

Oil Reservoir

(For 3 stage units in vertical EL5 mounting position) — not available with large input option

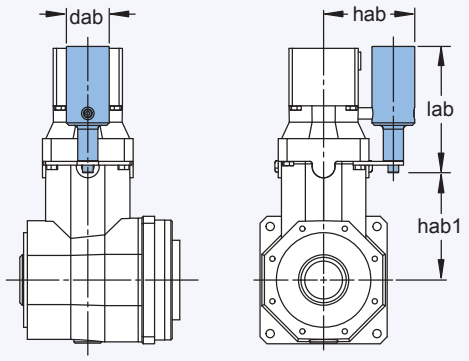

Dimensional Data

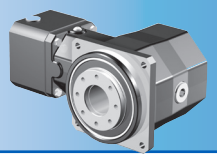

Table 1 Dimensions (mm)

Unit	a1	a2	B	b1	h6	b2	h6	c1	Ds	Dsa	Dss	ds	h9	ds1 Bore^{H9}	ds1 Shaft^{h9}	ds2	ds3
KS4	101	93	51	95	+0.000/-0.022	75	+0.000/-0.019	10	40	72	60	25	+0.000/-0.052	25	25	25.5	30
KS5	125	109	58	120	+0.000/-0.022	90	+0.000/-0.022	10	50	92	80	35	+0.000/-0.062	35	35	35.5	44
KS7	155	135	70	150	+0.000/-0.025	110	+0.000/-0.022	15	65	112	100	45	+0.000/-0.062	45	45	45.5	55

Table 2 Dimensions (mm)

Unit	e1	e2	f1	f2	l4	l6	ls	lsa	m1	m2	m3	m4	m5	o	s1	s5	t2
KS4	120	88	8	3	18	77.5	151	158	50.5	20	34	25	29	53	6.6	M5x0.80	9
KS5	145	105	9	3	19.5	98	171.5	179.5	62.5	30	39	35	34	62	9	M6x1.00	11
KS7	180	130	10	3	24	120	211	218	77.5	40	42	45	37	78	11	M8x1.25	14

Table 3 Dimensions (mm)

Standard Input			Large Input		
Unit	a5	M	Unit	a5	M
KS402	72	137.5	KS402_L	100	141.5
KS403	55	161.0	KS403_L	75	177.5
KS502	98	158.0	KS502_L	115	166.5
KS503	72	205.5	KS503_L	100	209.5
KS702	115	191.0	KS702_L	145	205.0
KS703	98	240.5	KS703_L	115	249.0

Table 4 Oil Reservoir Dimensions (mm)

Unit Type	dab	hab	hab1	lab
KS403	34	74.5	85	100
KS503	39	92	105	122
KS703	49	109.5	132	134

KSS Series: RIGHT ANGLE — Solid Shaft/Hollow Output

KSS Features

- 4:1 to 55:1 ratios (higher ratios available. Contact STOBER.)
- Quiet running (<53dB(A))
- Extra seal between motor and reducer to prevent ingress
- Totally enclosed – no breather to allow contaminates in or oil out
- Mounting flexibility to fit the application
- Error free motor mounting and quick changeover with toleranced pilot on motor plate
- Magnetic oil filtration to remove contaminants to prevent breakdowns
- Build and ship in one day
- Assembled in the USA

The KSS is the stainless steel version of our K gearbox. Capable of handling the harshest washdowns and requiring zero maintenance, the KSS is ideal for your caustic environments. Every gearbox is made to order. STOBER will custom whatever you need to fit your application. Contact us today to learn more.

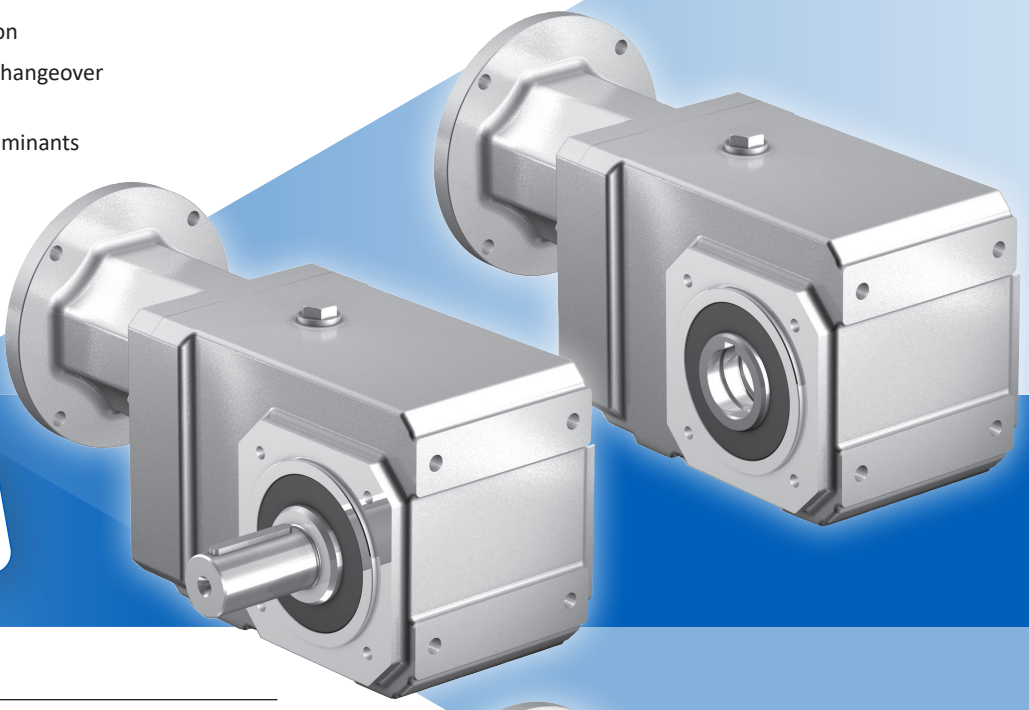

SHIPS in 1 DAY!
NO EXPEDITE FEE FOR 24 HOUR SERVICE

General Specifications

Ambient Temperature	0°C to +40°C (104°F) [Unit temperature <80°C Max]
Backlash	≤10 standard arcmins (see performance overview chart, (page 274)
Coating	Stainless steel housing
Degree of Protection	IP69K
Direction of Rotation	Input and output rotate the SAME direction, see page 275
Efficiency	97%
Input RPM	Up to 6,000 RPM
Installation	Requires 10.9 fasteners for tapped holes housing. See page 288, for more information
Lubrication	Lubricated for life - food grade Mobil SHC CIBUS 220 standard
Mounting Position	Must be specified, see page 275
Warranty	3 year standard warranty

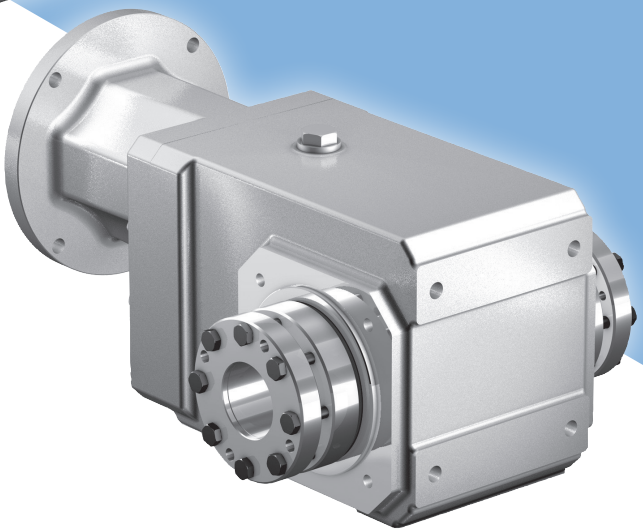

Lubricated for life* - standard Mobil 600XP200, option food grade Mobil SHC CIBUS 220



KSS Series Ordering Options At-a-Glance

Using the **Selection Data** table later in this section, select the KSS Series Gearhead with the appropriate performance and design options tailored to your motor choice and exact application requirements. Use the part number guide below as a reference to build a part number for the complete gearhead assembly.

Part Number Examples:

1	2	3	4	5	6	7	8		
KSS	1	0	2	V	F	0040	MS1R	E12	*

	Design Option	Part Number Code	Description
1	**Series**	KSS	Stainless steel housing; right angle helical/bevel
2	**Size**	1 2 3	3 sizes of gearhead
3	**Generation**	0	Version of gearhead
4	**# of Stages**	2	Two stage
5	**Output**	V A W	Shaft output (side 3 or 4 only, please specify) Hollow output Double wobble-free bushing
6	**Housing**	F G NG	Round output flange (side 3 or 4 only, please specify) Pitch Circle Diameter (PCD) tapped holes Foot mounting (side 1 or 5 only)
7	**Ratio**	0040	Ratios range from 4:1 to 272:1 (0040=4:1; 0272=272:1)
8	**Motor Adapter**	MS1R MS2R MS3R	3 input sizes (see also motor mounting plate option) (See “Motor Mounting Plate Option”, page 275)
*	**Mounting Position**	E12, E34 EL5, EL6	Please specify. Required special instruction for all units (See “KSS Mounting Position Options”, page 275)

Options

Lubrication

- KSS Series comes standard with food grade lubrication; optional synthetic available. Contact STOBER for details.

KSS Performance Overview

KSS Series performance is dependent on several factors including duty cycle, bearing design, gearhead size and stage configuration, among others. Use the chart below for preliminary evaluation, then use the following performance chart and selection information on the following pages for specific performance sizing and selection.

			Size/Generation	KSS10	KSS20	KSS30
			# of Stages	2	2	2
Acceleration Torque M_{2BMAX}			Nm	135	220	385
Output Torque Nom. M_{2N}			Nm	119	200	350
Torsional Stiffness C_2			Nm/arcmin	≤5.8	≤8.1	≤9.6
Torsional Backlash [1] $\Delta\phi$			arcmin	≤12	≤10	≤10
Input Speed Max. n_{1MAX}	Continuous		EL1, 2, 5, 6	4000	4000	3500
			EL3, 4	4000	3900	3500
	Cyclic			6000	5500	5000
Efficiency (@nom torque)			%	97	97	97
Weight			kg lbs	13.1 29	18.1 40	30.4 67
Noise [2]			dB(A)	≤53		
Axial Load Max. F_{2AMAX}			N	1900	2100	2400
Radial Load Max. [3] F_{2RMAX}			N	5000	6000	7000
Tilting Moment Max. [3] M_{2KMAX}	Solid Shaft		Nm	360.	430	525
	Hollow Bore		Nm	240	310	380

[1] *Tested at 1.5% of nominal torque and recorded on the output side of the gearhead. For lower backlash, contact STOBER technical support.*

[2] *Measurement at one (1) meter distance with input speed (n_1) of 2000 RPM.*

[3] *Rating based on output speed (n_2) of 20 RPM. For values at other speeds see page 276*

KSS Series Output Options

Diameters in **BOLD BLUE** are configurations readily available from inventory. Contact STOBER for delivery on other output sizes.

	"V" Solid Shaft (Stainless Steel – Inches)	"A" Hollow Bore (Stainless Steel – Inches)	"WFBSS" Double Side Bushings Stock Bore (Stainless Steel – Inches)
KSS1	**1.000**	**1.000**	**1.000**
KSS2	**1.250**	**1.250**	1.000 1.1875 **1.250** 1.375 **1.4375** **1.500**
KSS3	**1.250**	**1.375**	1.000 1.1875 **1.250** 1.375 **1.4375** **1.500**

** Stainless steel options are ideal for food and corrosion resistant, harsh washdown environments.*

Design Option						
	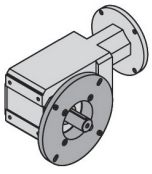	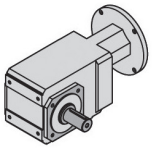	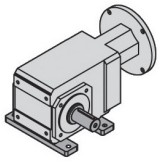	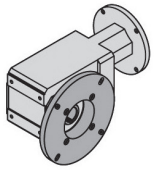	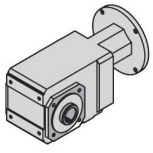	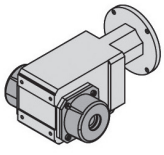
Output	**V** Solid Shaft	**V** Solid Shaft	**V** Solid Shaft	**A** Hollow	**A** Hollow	**W** Double Bushing
Housing	**F** Round Flange	**G** Tapped Holes	**NG** Foot Mount	**F** Round Flange	**G** Tapped Holes	**G** Tapped Holes



KSS Series Motor Mounting Plate Option (Motor information required with Motor Adapter option)

STOBER Servo Gearheads fit the motor of your choice with the appropriate motor mounting plate assembled between the motor and the gearhead.

NOTE: When ordering a gearhead:

- Specify the motor manufacturer and part number
- Provide the motor drawing with dimensions, or specify the motor mounting dimensions (per the list shown at right)

Customer Required Dimensions for Properly Sized Motor Mounting Plate

For a precise dimension on a specific motor, or for general assistance, we recommend you contact STOBER Technical Support.

d2	Motor Shaft Diameter (If an adapter bushing is required it will be supplied with the motor plate.)	s6	Bolt Diameter
b6	Pilot Diameter	l5	Motor Shaft Length
e6	Bolt Circle Diameter	f6	Pilot Length
		a6	Square Flange (Optional – motor plate will typically be made to match this dimension.)

Overhung Load Calculations

Pulling forces or overhung load of pulleys, sheaves, sprockets, etc. on the reducer output shaft must not exceed the allowable limits shown in the load/life/speed calculations, page page 276.

Note: Overhung load is measured at the center of the shaft extension. No overhung load is encountered when a reducer is flange mounted and/or coupling connected to another unit. However, the shafts of all components must be accurately aligned and secured to prevent pre-loading of the bearings and premature bearing failure.

Use the following formula to determine actual overhung load for a given drive:

$$\text{Imperial OHL (lbs)} = \frac{126{,}000 \times HP \times K}{D \times n}$$

$$\text{Metric OHL (N)} = \frac{19{,}100 \times kW \times K}{D \times n}$$

Where:

OHL	Overhung load (N or lbs)
HP	Horsepower
kW	Transmitted Kilowatt
D	Pitch Diameter (inches or meters) of Sprocket, Gear, Sheave, Pulley, etc.
n	Maximum Shaft RPM
K	1.00 Single Chain Drive; 1.25 Timing Belt Drive; 1.25 Spur or Helical Gear Drive; 1.50 V-Belt Drive; 2.50 Flat Belt Drive

KSS Mounting Position Options

When ordering, the mounting position (E12, E34, EL5 or EL6), MUST BE SPECIFIED

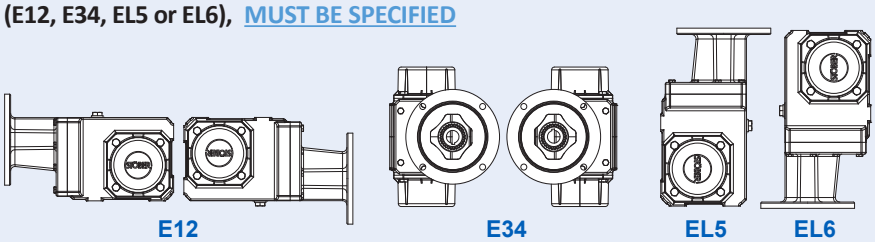

KSS Direction of Rotation

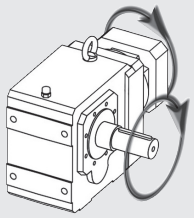

Permissible Motor Tilting Torque

The permissible tilting torque of the motor attached to the gear unit is a result of the static and dynamic load "F" from the motor weight, mass acceleration, and vibration multiplied by the distance from the center of gravity "l_S" of the motor.

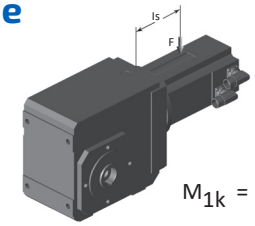

$M_{1k} = F \times l_S \leq M_{1K}$

M_{1K}	MS1R	MS2R	MS3R
Nm	25	60	125

Permissible Output Shaft Load and Tilting Moments*

	V Solid Shaft Output [1]				A, S, W Hollow Output [2]		
Unit	Z_2 mm	F_{2A} N	F_{2R} N	M_{2K} Nm	Z_2 mm	F_{2A} N	M_{2K} Nm
KSS1	40	1900	5000	360	40	1900	240
KSS2	42	2100	6000	430	42	2100	310
KSS3	45	2400	7000	525	45	2400	380

** Refer to illustration and definitions below.*

[1] For DOUBLE output shaft: F_{2R} x 0.7

[2] Values shown for "W" Style are for double bushings. For single bushings use value M_{2K} x 0.5 and F_{2A} x 0.5

[3] Solid Shaft unit with a Flange – Z_2 value is 132mm/5.20"; F_{2R} value is 64,000N/14,400 lbs.

KSS Series Load/Life/Speed Calculations

The permissible load and tilting moment values are based on an output speed of 20 RPM. For higher speeds the following applies, where n_2 is the desired speed:

$$F_{2AX} = \frac{F_{2A}}{\sqrt[3]{\frac{n_2}{20}}} \qquad F_{2RX} = \frac{F_{2R}}{\sqrt[3]{\frac{n_2}{20}}} \qquad M_{2KX} = \frac{M_{2K}}{\sqrt[3]{\frac{n_2}{20}}}$$

The application output tilting moment should be determined by the following formula:

$$M_{2A} = \frac{2 \bullet F_{2a} \bullet y_2 + F_{2rb} \bullet (x_2 + Z_2)}{1000} \leq M_{2K}$$

Where:

Z_2	Distance of Shaft Shoulder to Center of Output Bearing	$F_{2rad100}$	Permitted Radial Force ≤100RPM
n_2	Actual Average Output Speed	$F_{2rad,acc}$	Radial Acceleration Force
X_2	Distance of the Shaft Shoulder to the Force Application Point	$F_{2rad,acc*}$	Radial Acceleration Force at Gear Unit Output
Y_2	Distance of the Shaft Axis to the Axial Force Application Point	M_{2K100}	Permitted Tilting Torque ≤100RPM
F_{2ax*}	Actual Axial Force at Gear Unit Output	$M_{2K,acc}$	Permitted Acceleration Tilting Torque
F_{2ax100}	Permitted Axial Force	$M_{2k,acc*}$	Permitted Acceleration Tilting Torque at Gear Unit Output
		C_{2K}	Tilting Stiffness

All formulas shown are based on METRIC values

Upper case letters are permissible values. Lower case letters are for existing values.

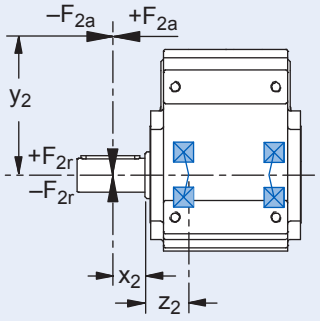



Reducer Ratio (i)		Output Torque			Backlash	Part Number* (Gearhead + Input)	Max. Input Speed RPM (n1)			Input Inertia	Tors. Stiffness
		Nom. [1]	Accel.	Peak [2]			Continuous		Cyclic		
		M_{2N}	M_{2acc}	M_{2NOT}	$\Delta\phi_2$		EL	EL		J_1	C_2
Nom.	Exact	Nm	Nm	Nm	arcmin		1,2	3,4,5,6	All	kgcm²	Nm/ arcmin
KSS1											
4.000	4/1	42	42	52	≤12	KSS102_0040 MS1R	3300	2800	4500	1.4	2.8
5.568	1520/273	58	58	72	≤12	KSS102_0056 MS1R	3300	2800	4500	1.3	4.3
6.644	299/45	64	64	80	≤12	KSS102_0066 MS1R	3600	3300	5000	1.0	3.5
9.249	1748/189	76	90	112	≤12	KSS102_0092 MS1R	3600	3300	5000	0.9	5.2
10.14	507/50	79	91	114	≤12	KSS102_0100 MS1R	4000	3800	5500	0.8	3.8
14.11	494/35	88	127	158	≤12	KSS102_0140 MS1R	4000	3800	5500	0.8	5.5
16.71	117/7	93	125	172	≤12	KSS102_0165 MS1R	4000	4000	6000	0.7	4.0
20.15	403/20	99	125	199	≤12	KSS102_0200 MS1R	4000	4000	6000	0.7	4.0
23.27	1140/49	104	135	239	≤12	KSS102_0230 MS1R	4000	4000	6000	0.7	5.7
25.22	1261/50	96	115	192	≤12	KSS102_0250 MS1R	4000	4000	6000	0.6	4.0
28.05	589/21	111	135	240	≤12	KSS102_0280 MS1R	4000	4000	6000	0.7	5.7
33.71	4719/140	73	88	146	≤12	KSS102_0340 MS1R	4000	4000	6000	0.6	4.0
35.11	3686/105	119	135	240	≤12	KSS102_0350 MS1R	4000	4000	6000	0.6	5.8
40.30	403/10	61	74	96	≤12	KSS102_0400 MS1R	4000	4000	6000	0.6	4.1
46.92	2299/49	102	122	203	≤12	KSS102_0470 MS1R	4000	4000	6000	0.6	5.8
56.10	1178/21	86	103	133	≤12	KSS102_0560 MS1R	4000	4000	6000	0.6	5.8
KSS2											
4.000	4/1	103	171	245	≤10	KSS202_0040 MS2R	3000	2600	4000	3.7	3.9
5.177	2107/407	113	190	308	≤10	KSS202_0052 MS2R	3000	2600	4000	2.9	4.7
7.118	2107/296	125	211	400	≤10	KSS202_0071 MS2R	3000	2600	4000	2.6	6.4
8.397	2494/297	132	220	400	≤10	KSS202_0084 MS2R	3500	3100	4500	2.0	5.7
10.07	2881/286	141	220	400	≤10	KSS202_0100 MS2R	3500	3500	5000	1.8	6.0
11.55	1247/108	147	220	400	≤10	KSS202_0115 MS2R	3500	3100	4500	1.9	7.4
12.71	559/44	152	220	400	≤10	KSS202_0125 MS2R	3500	3500	5000	1.6	6.2
13.85	2881/208	156	220	400	≤10	KSS202_0140 MS2R	3500	3500	5000	1.7	7.6
17.47	559/32	169	220	400	≤10	KSS202_0175 MS2R	3500	3500	5000	1.6	7.8
20.33	1118/55	178	220	400	≤10	KSS202_0200 MS2R	3500	3500	5000	1.4	6.5
25.13	1935/77	191	220	400	≤10	KSS202_0250 MS2R	3500	3500	5000	1.3	6.5
27.95	559/20	197	220	400	≤10	KSS202_0280 MS2R	3500	3500	5000	1.4	8.0
33.62	1849/55	154	185	308	≤10	KSS202_0340 MS2R	3500	3500	5000	1.3	6.6
34.55	1935/56	200	220	400	≤10	KSS202_0350 MS2R	3500	3500	5000	1.3	8.1
46.23	1849/40	200	220	400	≤10	KSS202_0460 MS2R	3500	3500	5000	1.3	8.1

[1] *Maximum torque for continuous input 1500 RPM - horizontal output position.*

[2] *Maximum momentary torque for emergency stops or heavy shock load. (Admissible stops per life of gearhead = 1,000 stops maximum.)*

* *Motor adapter code (shaft diameter max - mm): MS1R (19), MS2R (24), MS3R (28)*

Reducer Ratio (i)		Output Torque			Backlash	Part Number* (Gearhead + Input)	Max. Input Speed RPM (n1)			Input Inertia	Tors. Stiffness
		Nom. [1]	Accel.	Peak [2]			Continuous		Cyclic		
		M_{2N}	M_{2acc}	M_{2NOT}	$\Delta\phi_2$					J_1	C_2
Nom.	Exact	Nm	Nm	Nm	arcmin		EL 1,2	EL 3,4,5,6	All	kgcm²	Nm/ arcmin
KSS3											
4.000	4/1	155	171	253	≤10	**KSS302_0040 MS3R**	2700	2300	3800	6.4	4.5
5.375	43/8	200	229	326	≤10	**KSS302_0054 MS3R**	2700	2300	3800	4.5	5.7
7.391	473/64	222	315	448	≤10	**KSS302_0074 MS3R**	2700	2300	3800	3.9	7.5
8.444	2322/275	232	360	479	≤10	**KSS302_0084 MS3R**	3200	2800	4200	2.8	7.1
10.14	3010/297	247	385	554	≤10	**KSS302_0100 MS3R**	3500	3100	5000	2.4	7.4
11.61	1161/100	258	385	659	≤10	**KSS302_0115 MS3R**	3200	2800	4200	2.6	8.6
12.58	3182/253	265	385	661	≤10	**KSS302_0125 MS3R**	3500	3100	5000	2.1	7.8
13.94	1505/108	274	385	700	≤10	**KSS302_0140 MS3R**	3500	3100	5000	2.3	8.9
16.94	559/33	293	385	700	≤10	**KSS302_0170 MS3R**	3500	3500	5000	1.7	8.1
17.29	1591/92	295	385	700	≤10	**KSS302_0175 MS3R**	3500	3100	5000	2.0	9.2
20.28	3569/176	311	385	700	≤10	**KSS302_0200 MS3R**	3500	3500	5000	1.6	8.2
23.29	559/24	325	385	700	≤10	**KSS302_0230 MS3R**	3500	3500	5000	1.7	9.4
25.26	3612/143	334	385	489	≤10	**KSS302_0250 MS3R**	3500	3500	5000	1.5	8.3
27.88	3569/128	346	385	700	≤10	**KSS302_0280 MS3R**	3500	3500	5000	1.6	9.5
33.62	1849/55	250	300	501	≤10	**KSS302_0340 MS3R**	3500	3500	5000	1.4	8.3
34.73	903/26	350	385	672	≤10	**KSS302_0350 MS3R**	3500	3500	5000	1.5	9.5
40.51	4902/121	193	231	376	≤10	**KSS302_0410 MS3R**	3500	3500	5000	1.3	8.4
46.23	1849/40	344	385	688	≤10	**KSS302_0460 MS3R**	3500	3500	5000	1.4	9.6
55.71	2451/44	265	318	517	≤10	**KSS302_0560 MS3R**	3500	3500	5000	1.3	9.6

[1] Maximum torque for continuous input 1500 RPM - horizontal output position.

[2] Maximum momentary torque for emergency stops or heavy shock load. (Admissible stops per life of gearhead = 1,000 stops maximum.)

** Motor adapter code (shaft diameter max - mm): MS1R (19), MS2R (24), MS3R (28)*

Notes



"V" Solid Shaft Output with "F" Round Flange Housing

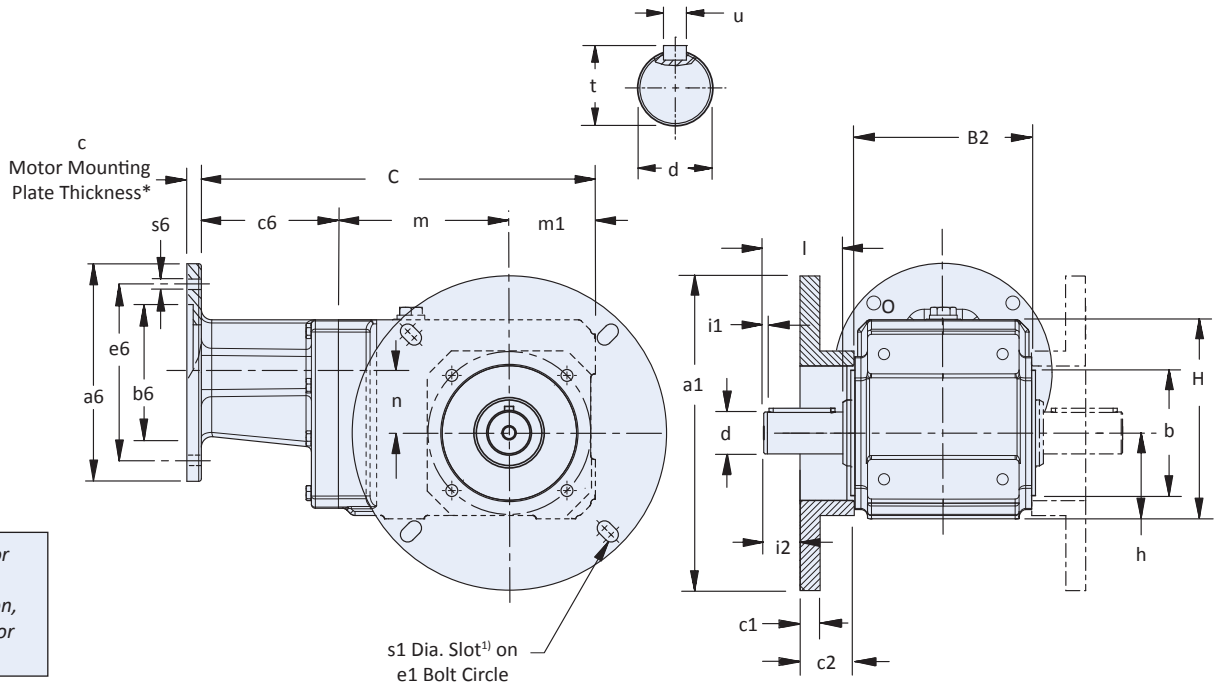

** See Motor Mounting Plate Option, page 275 for details.*

Table 1 KSS Series – "V" Solid Shaft Output with "F" Round Flange Housing – Dimensions (mm)

Unit	a1	B2	b	C	c1	c2	c6	e1 Min.	e1 Max.[1)]
KSS102VF	171.5	106	75	256.5	14	38.1	82.5	149.2	–
KSS202VF	222	134	95	299	14	38.1	104	190	203.2
KSS302VF	222	146	95	327.5	14	38.1	102.5	190	203.2

1) KSS1 mounting bolt hole is not a slot.

Table 2 KSS Series – "V" Solid Shaft Output with "F" Round Flange Housing – Dimensions (mm)

Unit	H	h	i2	l	l1	m	m1	n	s1	Wt. lbs.
KSS102VF	126	60	20.5	50	4	111	60	36	8.5	29
KSS202VF	151	65	28	60	4	130	65	46	10.5	40
KSS302VF	166.5	75	28	60	4	150	75	53	10.5	55

1) KSS1 mounting bolt hole is not a slot.
All weights are approximate.

Table 3 "V" Solid Shaft Output — Standard Sizes

Unit	Inches d	t	u – Key
KSS1	1.000	1.11	1/4 x 1/4 x 1-9/16
KSS2	1.250	1.36	1/4 x 1/4 x 1-15/16
KSS3	1.250	1.36	1/4 x 1/4 x 1-15/16

Table 4 Servo Motor Adapter Flange (mm)

Unit	a6	b6	e6	s6
KSS1	112	80	100	6.4
KSS2	112 143	80 110	100 130	6.5 8.4
KSS3	112 143 180	80 110 130	100 130 165	6.4 8.4 10.5



"V" Solid Shaft Output with "G" Pitch Circle Diameter (PCD) Tapped Holes

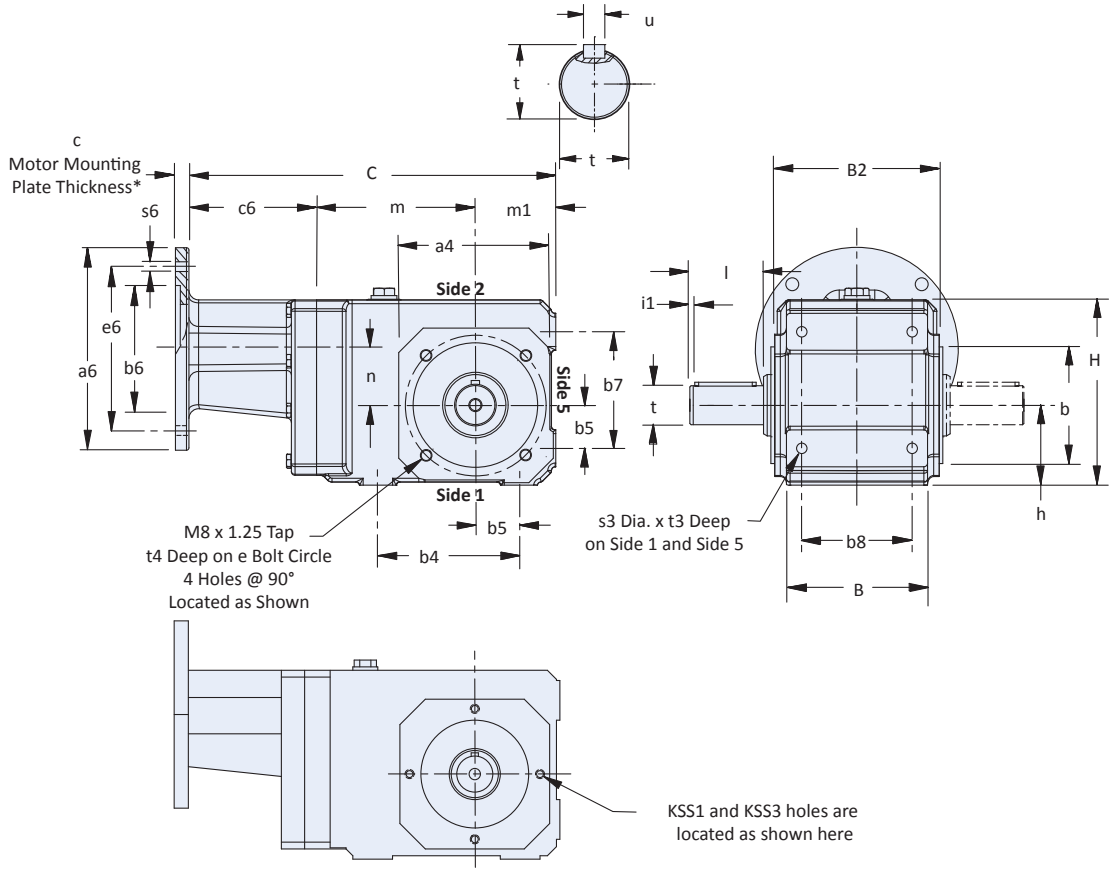

** See Motor Mounting Plate Option, page 275 for details.*

Table 1 KSS Series – "V" Solid Shaft Output with "G" Pitch Circle Diameter (PCD) Tapped Holes – Dimensions (mm)

Unit	a4	B2	b5	C	c6	D	e	F[1]	F[5]	G	H
KSS102VG	105	106	30	256.5	85.5	126	90	90	75	70	60
KSS202VG	116	134	35	299	104	151	115	115	95	90	65
KSS302VG	116	146	35	327.5	102.5	166.5	115	130	105	105	75

Table 2 KSS Series – "V" Solid Shaft Output with "G" Pitch Circle Diameter (PCD) Tapped Holes – Dimensions (mm)

Unit	l	M	m	m1	n	Q	R	s3	t3	t4	Wt. lbs.
KSS102VG	50	75	111	60	36	4	90	M8 x 1.25	13	13	29
KSS202VG	60	95	130	65	46	4	112	M10 x 1.50	16	13	40
KSS302VG	60	95	150	75	53	4	140	M10 x 1.50	16	14	55

All weights are approximate.

Table 3 "V" Solid Shaft Output — Standard Sizes

	Inches		
Unit	d	t	u – Key
KSS1	1.000	1.11	1/4 x 1/4 x 1-9/16
KSS2	1.250	1.36	1/4 x 1/4 x 1-15/16
KSS3	1.250	1.36	1/4 x 1/4 x 1-15/16

Table 4 Servo Motor Adapter Flange (mm)

Unit	a6	b6	e6	s6
KSS1	112	80	100	6.4
KSS2	112	80	100	6.5
	143	110	130	8.4
KSS3	112	80	100	6.4
	143	110	130	8.4
	180	130	165	10.5

"V" Solid Shaft Output with "NG" Foot Mount Housing

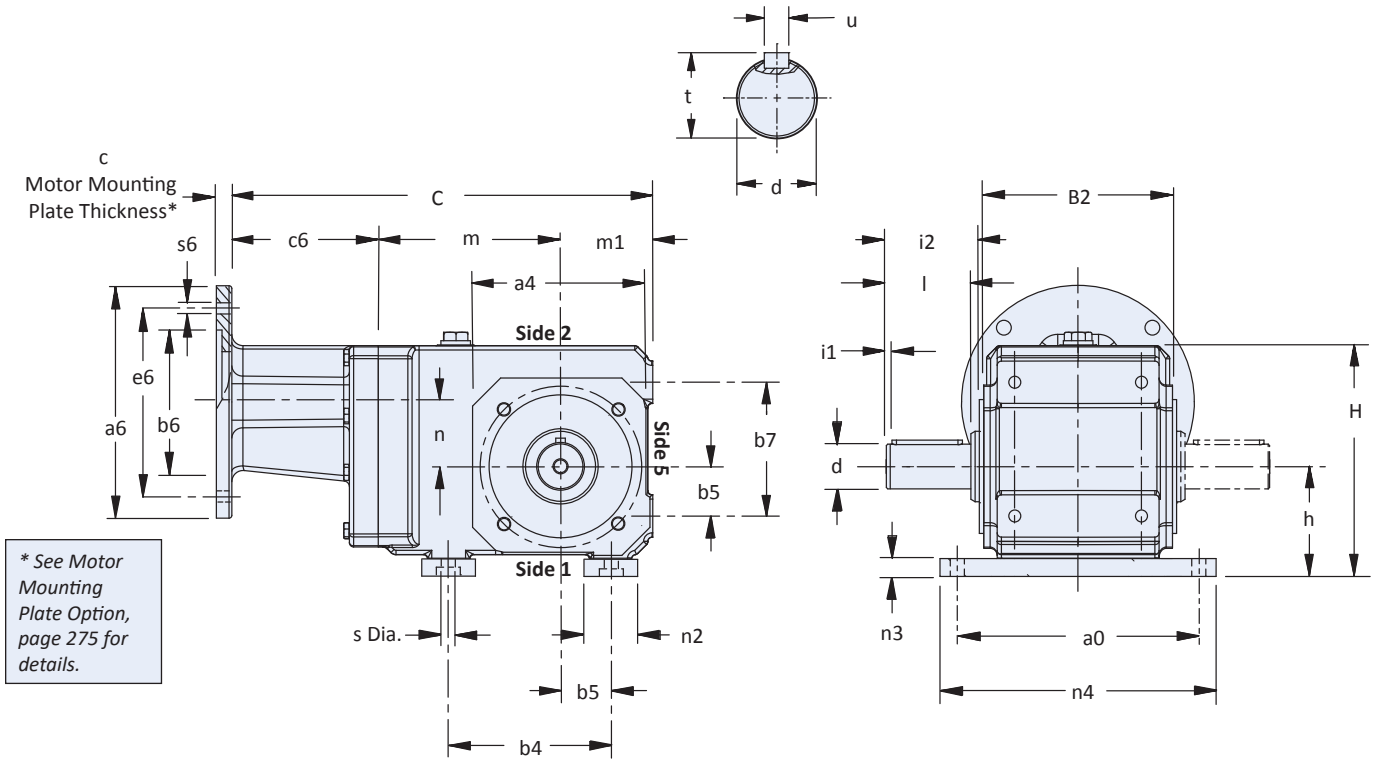

** See Motor Mounting Plate Option, page 275 for details.*

Table 1 KSS Series – "V" Solid Shaft Output with "NG" Foot Mount Housing – Dimensions (mm)

Unit	a0	a4	B2	b4	b5	b7	C	c6	H	h	n4
KSS102VNG	115	115	106	90	30	75	256.5	85.5	126	60	140
KSS202VNG	171	126	134	115	35	95	299	104	164	78	196
KSS302VNG	171	132	146	130	35	105	327.5	102.5	179.5	87.5	196

Table 2 KSS Series – "V" Solid Shaft Output with "NG" Foot Mount Housing – Dimensions (mm)

Unit	i2	l	l1	m	m1	n	n2	n3	s	Wt. lbs.
KSS102VNG	59	50	4	111	60	36	38.1	12.7	8.4	29
KSS202VNG	66	60	4	130	65	46	38.1	12.7	10	40
KSS302VNG	66	60	4	150	75	53	38.1	12.7	10	55

All weights are approximate.

Table 3 "V" Solid Shaft Output — Standard Sizes

	Inches		
Unit	d	t	u – Key
KSS1	1.000	1.11	1/4 x 1/4 x 1-9/16
KSS2	1.250	1.36	1/4 x 1/4 x 1-15/16
KSS3	1.250	1.36	1/4 x 1/4 x 1-15/16

Table 4 Servo Motor Adapter Flange (mm)

Unit	a6	b6	e6	s6
KSS1	112	80	100	6.4
KSS2	112 143	80 110	100 130	6.5 8.4
KSS3	112 143 180	80 110 130	100 130 165	6.4 8.4 10.5



"A" Hollow Bore Output with "F" Round Flange Housing

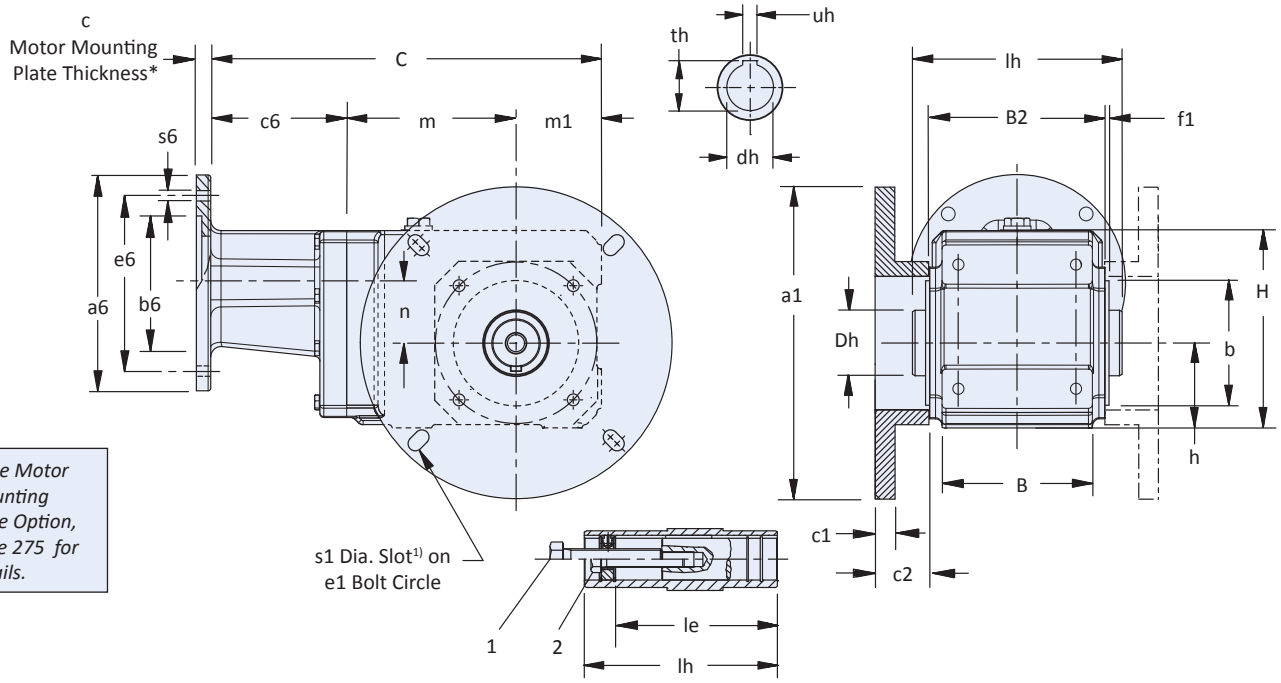

** See Motor Mounting Plate Option, page 275 for details.*

1. Removal Bolt — not supplied. Must be smaller than mounting bolt. See Installation Guide for details.
2. Mounting Bolt
See installation guide for installation of hollow output.

Table 1 KSS Series – "A" Hollow Output with "F" Round Flange Housing – Dimensions (mm)

Unit	a1	lh	B	B2	b	C	c1	c2	c6	Dh
KSS102AF	171.5	120	90	106	75	256.5	14	38.1	82.5	40
KSS202AF	222	148	112	134	95	299	14	38.1	104	50
KSS302AF	222	160	140	146	95	327.5	14	38.1	102.5	50

1) KSS1 mounting bolt hole is not a slot

Table 2 KSS Series – "A" Hollow Output with "F" Round Flange Housing – Dimensions (mm)

Unit	e1 Min.	e1 Max.1)	f1	h	le	m	m1	n	s1	Wt. lbs.
KSS102AF	149.2	–	3	60	98	111	60	36	8.5	29
KSS202AF	190	203.2	3	65	113	130	65	46	10.5	40
KSS302AF	190	203.2	3	75	125	150	75	53	10.5	55

1) KSS1 mounting bolt hole is not a slot.
All weights are approximate.

Table 3 "A" Hollow Bore Output — Standard Sizes

Unit	Inches dh	th	UA	1
KSS1	1.000	1.11	0.250	1/2 – 13
KSS2	1.250	1.37	0.250	5/8 – 11
KSS3	1.375	1.52	0.312	5/8 – 11

Table 4 Servo Motor Adapter Flange (mm)

Unit	a6	b6	e6	s6
KSS1	112	80	100	6.4
KSS2	112	80	100	6.5
	143	110	130	8.4
KSS3	112	80	100	6.4
	143	110	130	8.4
	180	130	165	10.5

"A" Hollow Bore Output with "G" Pitch Circle Diameter (PCD) Tapped Holes

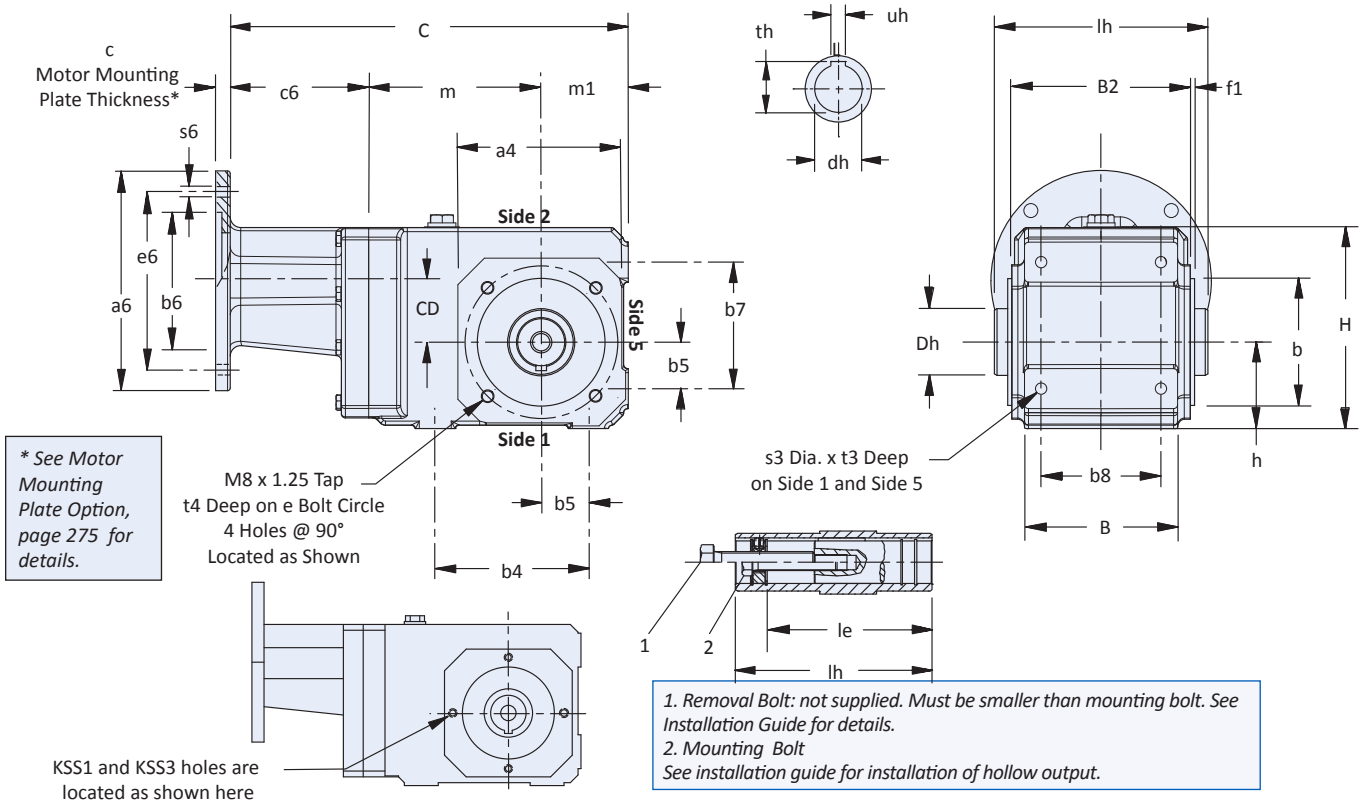

** See Motor Mounting Plate Option, page 275 for details.*

1. Removal Bolt: not supplied. Must be smaller than mounting bolt. See Installation Guide for details.
2. Mounting Bolt
See installation guide for installation of hollow output.

Table 1 KSS Series – "A" Hollow Output with "G" Pitch Circle Diameter (PCD) Tapped Holes – Dimensions (mm)

Unit	a4	B	B2	b	b4	b5	b7	b8	C	c6	Dh	e
KSS102AG	105	90	106	75	90	30	75	70	256.5	85.5	40	90
KSS202AG	116	112	134	95	115	35	95	90	299	104	50	115
KSS302AG	116	140	146	95	130	35	105	105	327.5	102.5	50	115

Table 2 KSS Series – "A" Hollow Output with "G" Pitch Circle Diameter (PCD) Tapped Holes – Dimensions (mm)

Unit	f1	H	h	le	lh	m	m1	n	s3	t3	t4	Wt. lbs.
KSS102AG	3	126	60	98	120	111	60	36	M8 x 1.25	13	13	29
KSS202AG	3	151	65	113	148	130	65	46	M10 x 1.50	16	13	40
KSS302AG	3	166.5	75	125	160	150	75	53	M10 x 1.50	16	14	55

1) Removal bolt, supplied by customer, must be smaller than mounting bolt. See Page 298.
All weights are approximate.

Table 3 "A" Hollow Bore Output — Standard Sizes

	Inches			
Unit	dh	th	UA	1
KSS1	1.000	1.11	0.250	1/2 – 13
KSS2	1.250	1.37	0.250	5/8 – 11
KSS3	1.375	1.52	0.312	5/8 – 11

Table 4 Servo Motor Adapter Flange (mm)

Unit	a6	b6	e6	s6
KSS1	112	80	100	6.4
KSS2	112 143	80 110	100 130	6.5 8.4
KSS3	112 143 180	80 110 130	100 130 165	6.4 8.4 10.5



"W" Double Bushing Output with "G" Pitch Circle Diameter (PCD) Tapped Holes

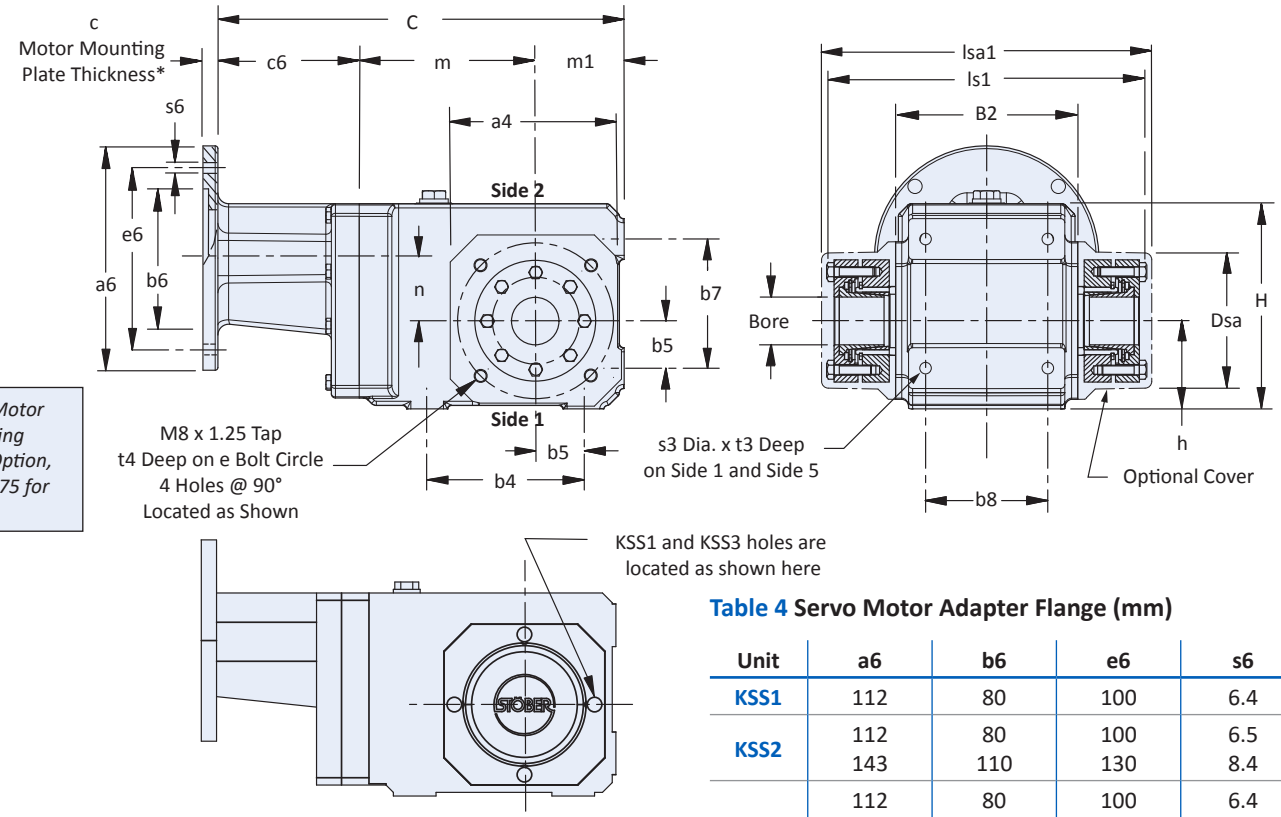

** See Motor Mounting Plate Option, page 275 for details.*

Table 4 Servo Motor Adapter Flange (mm)

Unit	a6	b6	e6	s6
KSS1	112	80	100	6.4
KSS2	112 143	80 110	100 130	6.5 8.4
KSS3	112 143 180	80 110 130	100 130 165	6.4 8.4 10.5

Table 1 KSS Series – "W" Double Wobble-Free Bushing Output with "G" Pitch Circle Diameter (PCD) Tapped Holes – Dimensions (mm)

Unit	a4	B2	b4	b5	b7	b8	C	c6	Dsa	e
KSS102WG	105	105.9	90	30	75	70	256.5	85.5	78	90
KSS202WG	116	134.1	115	35	95	90	299	104	99.5	115
KSS302WG	116	146.1	130	35	105	105	327.5	102.5	96	115

Table 2 KSS Series – "W" Double Wobble-Free Bushing Output with "G" Pitch Circle Diameter (PCD) Tapped Holesg – Dimensions (mm)

Unit	H	h	lsa	ls1	m	m1	n	s3	t3	t4	Wt. lbs.
KSS102WG	126	60	198.12	194.06	111	60	36	M8 x 1.25	13	13	29
KSS202WG	151	65	237.74	226.06	130	65	46	M10 x 1.50	16	13	40
KSS302WG	166.5	75	252.73	239.014	150	75	53	M10 x 1.50	16	14	55

All weights are approximate.

Table 3 "WFBSS" Double Side Bushings Stock Bore Sizes

	Inches					
Unit	1	1-3/16	1-1/4	1-3/8	1-7/16	1-1/2
KSS1	WFBSS1-100	—	—	—	—	—
KSS2	WFBSS2-100	WFBSS2-103	WFBSS2-104	WFBSS2-106	WFBSS2-107	WFBSS2-108
KSS3	WFBSS3-100	WFBSS3-103	WFBSS3-104	WFBSS3-106	WFBSS3-107	WFBSS3-108

Output Options

BLUE: standard output diameters in stock
BLACK: optional diameters in stock
Other options are available upon request. Please contact STOBER to learn about other options and their deliveries.

KSS Series (Stainless Steel)

		KSS1	KSS2	KSS3
Solid Shaft	Inches	1	1-1/4	1-1/4
Hollow Bore	Inches	1	1-1/4	1-3/8
Wobble Free Bushing	Inches	1	1 1-3/16 1-1/4 1-3/8 1-7/16 1-1/2	1 1-3/16 1-1/4 1-3/8 1-7/16 1-1/2

KS Series (Carbon Steel — Metric)

	KS4	KS5	KS7
Solid Shaft	22	32	40
Hollow Bore	31.5	40	50
Shrink Ring	25.5	35.5	45.5

KL Series

			KL1	KL2
Solid Shaft	Carbon Steel	Inches	5/8	3/4
		Metric	16	20
	Stainless Steel	Inches	5/8	3/4
		Metric	16	20
Hollow Bore	Carbon Steel	Inches	5/8	3/4
		Metric	16	20
	Stainless Steel	Inches	5/8	3/4
		Metric	16	20
Wobble Free Double Bushing	Stainless Steel	Inches	—	3/4
Shirnk Ring	Carbon Steel	Metric	16	20

K Series

			K1	K2	K3	K4	K5	K6	K7	K8	K9	K10
Solid Shaft	Carbon Steel	Inches	1	1-1/4	1-1/4	1-3/8	1-3/4	1-3/4	2-3/8	2-7/8	3-5/8	4-3/8
		Metric	25	30	30	40	45	50	60	70	90	—
	Stainless Steel	Inches	1	1-1/4	1-1/4	1-3/8	1-3/4	1-3/4	2-3/8	2-7/8	3-5/8	—
		Metric	25	—	—	—	45	—	—	—	—	—
Hollow Bore	Carbon Steel	Inches	1	1-3/16	1-3/8	1-1/2	2	2	2-3/8	2-3/4	3-1/4	4
		Metric	25	30	35	40	50	50	60	70	90	—
	Stainless Steel	Inches	1	1-1/4	1-3/8	1-1/2	2	2	2-3/8	—	2-15/16 3 3-7/16	—
		Metric	25	30	35	40	50	—	60	—	—	—
Wobble Free Bushing (Single and Double Bushings**)	Stainless Steel*	Inches	1	1 1-3/16 1-1/4	1 1-3/16 1-1/4 1-3/8 1-7/16 1-1/2	1-1/4 1-7/16 1-1/2	1-7/16 1-1/2 1-15/16 2	1-7/16 1-1/2 1-15/16 2 2-3/16	1-15/16 2 2-3/8	2-3/16 2-3/8 2-7/16 2-3/4	—	—
		Metric	—	—	—	40	40	—	—	—	—	—
Shirnk Ring	Carbon Steel	Metric	25	30	35	40	50	50	60	70	90	100

**Also available in carbon steel*

C Series

			C0	C1	C2	C3	C4	C5	C6	C7	C8	C9
Solid Shaft	Carbon Steel	Inches	3/4	1	1-1/4	1-1/4	1-5/8	1-5/8	2-1/8	2-3/8	2-7/8	3-5/8
		Metric	20	25	30	30	40	40	50	60	70	90
	Stainless Steel	Inches	3/4	1	1-1/4	1-1/4	1-5/8	1-5/8	2-1/8	2-3/8	2-7/8	—
		Metric	20	25	30	30	40	—	60	—	—	—

F Series

			F1	F2	F3	F4	F6
Solid Shaft	Carbon Steel	Inches	1	1-1/4	1-3/8	1-5/8	2-1/8
		Metric	—	—	—	—	—
	Stainless Steel	Inches	—	—	—	—	—
		Metric	—	—	—	—	—
Hollow Bore	Carbon Steel	Inches	3/4	1	1-1/4	1-7/16 1-1/2	2
		Metric	20	25	30	40	50
	Stainless Steel	Inches	—	—	1-1/4	1-1/2	—
		Metric	—	—	—	—	—
Wobble Free Bushing (Single and Double Bushings**)	Stainless Steel	Inches	3/4	1 1-3/16	1 1-3/16 1-1/4 1-7/16 1-1/2	1-7/16 1-1/2	1-7/16 1-1/2
		Metric	20	—	—	40	—
Shrink Ring	Carbon Steel	Metric	20	25	30	40	50

** Double bushings only available with two stage units ** Double bushing only*

Standard & Optional Output Flange Sizes

C Series

Base Module	Flange Size		
C0	120	140	160*
C1	140	160	200*
C2	160	200*	250
C3	160	200	250*
C4	200	250*	300
C5	250	300*	
C6		300*	
C7		350*	
C8	350	400*	450
C9		450*	

K Series

Base Module	Flange Size
K1	140, 160*
K2	160, 200*
K3	160, 200*, 250
K4	250*
K5	250*
K6	300*
K7	300, 350*
K8	350 400* 450
K9	450*
K10	550*

** This is the standard flange size and will be shipped unless otherwise specified. Optional flanges are not available for all sizes.*

P; PE; PK/PKX Series (Carbon Steel — Metric)

	P2 PE2 PKX2	P3 PE3 PKX3	P4 PE4 PKX4	P5 PE5 PK/PKX5	P7 PK/PKX7	P8 PK/PKX8	P9 PK/PKX9
Solid Shaft	12	16	22	32	40	55	75

PH; PHQ; PHK/PHKX; PHQK Series (Carbon Steel — Metric)

	PH3 PHKX3	PH4 PHQ4 PHKX4	PH5 PHQ5 PHK/PHKX5 PHQK5	PH7 PHQ7 PHK/PHKX7 PHQK7	PH8 PHQ8 PHK/PHKX8 PHQK8	PH9 PHQ9 PHK/PHKX9 PHQK9	PH10 PHQ10 PHK/PHKX10 PHQK10	PHQK11
Hollow Bore	20	31.5*	40	50	80	90	95	120

*32 for PHQA4

Backlash Comparison – ArcMinute vs Linear Distance

		Linear Distance in Inches			
ArcMinute	Degrees	@ 3" R	@ 12" R	@ 24" R	@ 48" R
1	0.017	0.0009	0.0035	0.0070	0.0140
2	0.033	0.0017	0.0070	0.0140	0.0279
3	0.050	0.0026	0.0105	0.0209	0.0419
4	0.067	0.0035	0.0140	0.0279	0.0558
5	0.083	0.0044	0.0175	0.0349	0.0698
6	0.100	0.0052	0.0209	0.0419	0.0838
7	0.117	0.0061	0.0244	0.0489	0.0977
8	0.133	0.0070	0.0279	0.0558	0.1117
9	0.150	0.0079	0.0314	0.0628	0.1257
10	0.167	0.0087	0.0349	0.0698	0.1396
11	0.183	0.0096	0.0384	0.0768	0.1536
12	0.200	0.0105	0.0419	0.0838	0.1675
13	0.217	0.0113	0.0454	0.0908	0.1815
14	0.233	0.0122	0.0489	0.0977	0.1955
15	0.250	0.0131	0.0524	0.1047	0.2094
16	0.267	0.0140	0.0558	0.1117	0.2234
17	0.283	0.0148	0.0593	0.1187	0.2373
18	0.300	0.0157	0.0628	0.1257	0.2513
19	0.317	0.0166	0.0663	0.1326	0.2653
20	0.333	0.0175	0.0698	0.1396	0.2792

These values can be interpolated for backlash or distances not shown in the table.

$$\text{Backlash in ArcMinutes} = \left(\frac{\text{Linear Backlash in inches x 57.296}}{\text{Radius}} \right) 60$$

Calculation Example

The Backlash Comparison chart can be used to determine the amount of linear movement that will be realized with a given backlash value.

Example:

A "K" Series gearhead is mounted, with the output shaft vertical, under a 24" diameter turntable. The gearhead backlash is 10 arcminutes.

Reading across the table, the angular value of 10 arcminutes is 0.167 degrees.

Further determination indicates 10 arcminutes backlash will allow a linear movement of 0.0349 inches when measured at a 12 inch radius.

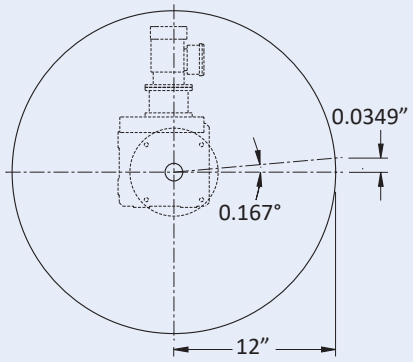

Gearhead Installation Notes

Servo Gearheads are a high torque product. To insure that the specified torque ratings are attained, several series require high quality grade fasteners to attach the gear units to the machine:

Servo Series	Grade
C, F, K, KL, KS, KSS, PE	10.9
P, PH, PHQ, PHV, PK, PKX, PHK, PHQK, PHKX, KS	12.9

For dynamic applications key connections should be avoided and the clearance of the key connection increases.

Shaft Height in Foot-Mounted Gear Units

The shaft height tolerance of STÖBER drives complies with DIN 747 requirements.

Shaft height tolerances are:

Up to shaft height 50 mm: -0.4 mm

Up to shaft height 250 mm: -0.5 mm

Up to shaft height 630 mm: -0.6 mm

Solid Shaft Specifications: The shaft end fit corresponds to DIN 748; i.e. diameter d [50 = tolerance ISO k6 diameter d >50 = tolerance ISO m6 Center holes in shafts with or without key correspond to DIN 332 T2 shape DR. The keys are in accordance with DIN 6885 Sheet 1 (tall shape A). In helical bevel and helical worm gear units solid shafts are available with an output on both sides. Keys are aligned to 0.03 mm.

Values and Symbols

Symbol	Description	Value		
		Imperial	*Multiplier*	Metric
F_{2a}	Axial Force @ Output Shaft	lbs.	4.45	N
F_{2A}	Permissible Axial Force			
F_{2r}	Radial Force @ Output Shaft			
F_{2R}	Permissible Radial Load			
F_{2RB}	Acceleration Permissible Radial Load			
f^{B}	Load Factor	—	—	—
i	Reducer Ratio	—	—	—
J_D	Motor + Reducer Inertia @ Motor RPM	lb-in-s^2	1.13×10^3	kgcm^2
J_Z	Total Inertia @ Reducer RPM			
M	Torque	in.lbs.	0.113	Nm
M_2	Application Torque			
M_{2e}	Equivalent Torque (Average RMS Torque)			
M_L	Friction Torque (Losses)			
M_{2b}	Application Acceleration Torque			
M_{2B}	Reducer Acceleration Torque			
M_{2K}	Reducer Tilting Moment			
M_{2KB}	Reducer Acceleration Tilting Moment			
M_{2N}	Reducer Nominal Output Torque			
M_{2peak}	Application Peak Torque			
M_{2PEAK}	Reducer Peak Torque			
M_{2V}	Application Deceleration Torque			
n	Speed	RPM	—	min^{-1}
n_b	Acceleration Speed			
nv	Deceleration Speed			
n_1	Input Speed			
n_2	Reducer Output Speed			
t	Time	seconds	—	seconds
t_b	Acceleration Time			
t_d	Duration Time			
t_v	Deceleration Time			
t_p	Pause Time			
t_r	Running Time			

Conversions

Imperial to Metric

- 1 inch x 25.4 = mm
- 1 in^2 x 645.16 = mm^2
- 1 lb x 0.453 = kg
- 1 US gal x 3.785 = L
- 1 HP x 0.746 = kW
- 1 lb x 4.45 = N
- 1 lb in x 0.113 = Nm
- 1 lb ft x 1.36 = Nm
- 1 lb ft x .1383 = kgm
- 1 lb in x .0115 = kgm
- 1 lb in^2 x 0.00029 = kgm^2
- 1 PSI x 0.0689 = bar
- 1 PSI x 0.00689 = N/mm^2
- °F = 32 + 9/5 x °C

Metric to Imperial

- mm x 0.03937 = inch
- 1 mm^2 x 0.0015 = in^2
- 1 kg x 2.205 = lb
- 1 L x 0.264 = US gal
- 1 kW x 1.341 = HP
- 1 N x 0.225 = lb
- 1 Nm x 8.85 = lb in
- 1 Nm x 0.737 = lb ft
- 1 kgm x 7.233 = lb ft
- 1 kgm x 86.798 = lb ft
- 1 kgm^2 (J) x 3418.0 = lb in^2 (WR^2)
- 1 bar x 14.5 = PSI
- 1 N/mm^2 x 145.04 = PSI
- °C = 5/9 (°F-32)

Formulas

- 0.2618 x Dia.(in) x RPM = Feet/Minute
- 0.00314 x Dia.(mm) x RPM = Meter/Minute

Terms and Conditions of Sale

1. **GENERAL.** All orders for products supplied by STOBER DRIVES INC. ("STOBER") shall be subject to these terms and conditions of sales. All transactions shall be governed by the laws of the Commonwealth of Kentucky. No modifications hereto will be binding unless agreed to in writing by STOBER.

2. **CUSTOMER.** The term "Customer," as used herein, means the distributor, resale dealer, original equipment manufacturer or first end-user customer that purchases the STOBER products.

3. **WARRANTY.** STOBER products shall be free from defects in material and workmanship for a maximum of 5-years (single shift operation or 30 months multiple shift operation) for Servo products (Servo Modular System, Servo Precision Planetary Gearheads, and Servo Geared Motors); 3-years (single shift operation or 18 months multiple shift operation) for MGS products; 2-years (single shift operation or 12 months multiple shift operation) for ComTrac products, from the date of shipment to the Customer. For Servo products, the motor on Servo Geared Motors, as well as all normal wear items, including oil seals and bearings, shall be covered for a period of 2-years (single shift operation or 12 months multiple shift operation). In the event that a product proves to be defective, STOBER's sole obligation shall be, at its option, to repair or replace the product. The repaired or replacement product will be shipped F.O.B. STOBER's facilities, freight prepaid by STOBER.

No employee, agent or representative of STOBER has the authority to waive, alter, vary or add to the terms hereof without the prior written approval of an officer of STOBER. It is expressly agreed that (a) this section constitutes the final expression of the parties' understanding with respect to the warranty and (b) this section is a complete and exclusive statement of the terms of the warranty.

STOBER shall have no obligation under the warranty set forth above in the event that:

(a) The Customer fails, within the warranty period to notify STOBER in writing and provide STOBER with evidence satisfactory to STOBER of the alleged defect within five (5) days after it becomes known to the customer;

(b) After inspection of a product, STOBER determines, in its sole discretion, that it is not defective in material or workmanship;

(c) Repair or replacement of a product is required through normal wear and tear;

(d) Any part in a product or any ingredient contained in a product requires replacement or repair through routine usage or normal wear and tear;

(e) A product is not maintained or used in accordance with STOBER's applicable operating and/or maintenance manuals, whether by the Customer or any third party;

(f) A product has been subject to misuse, misapplication, negligence, neglect (including, but not limited to, improper maintenance or storage), accident, catastrophe, improper installation, modification, adjustment, repair or lubrication, whether by the Customer or any third party, without the prior written consent of STOBER. Misuse shall include, but not be limited to, deterioration in a product due to chemical action and wear caused by the presence of abrasive materials;

(g) The system of connected rotating parts into which the product becomes incorporated is not compatible with the product, or it is not free from critical speed or torsional or other type of vibration within the specified operating range, no matter how induced; or

(h) The transmitted load and imposed torsional thrust and overhung loads are not within the published capacity limits for the unit sold.

Items manufactured by other parties but installed in or affixed to STOBER's products are not warranted by STOBER and bear only those warranties, express or implied, which are given by the manufacturer of such items, if any.

THE WARRANTY SET FORTH ABOVE IS INTENDED SOLELY FOR THE BENEFIT OF THE Customer AND DOES NOT APPLY TO ANY THIRD PARTY. ALL CLAIMS MUST BE MADE BY THE Customer AND MAY NOT BE MADE BY ANY THIRD PARTY. THIS WARRANTY MAY NOT BE TRANSFERRED OR ASSIGNED, IN WHOLE OR IN PART, BY THE Customer FOR ANY REASON WHATSOEVER. ANY SUCH ATTEMPTED TRANSFER OR ASSIGNMENT SHALL BE NULL AND VOID.

THIS WARRANTY TAKES THE PLACE OF ALL OTHER WARRANTIES, EXPRESS OR IMPLIED, WHICH ARE HEREBY DISCLAIMED AND EXCLUDED BY STOBER, INCLUDING WITHOUT LIMITATION, ANY WARRANTY OF MERCHANTABILITY OR FITNESS FOR A PARTICULAR PURPOSE OF USE AND ALL OBLIGATIONS OR LIABILITIES ON THE PART OF STOBER FOR DAMAGES ARISING OUT OF OR IN CONNECTION WITH THE USE, REPAIR OR PERFORMANCE OF THE PRODUCTS.

4. **MODIFICATIONS.** STOBER reserves the right, without notice to the Customer, to (a) change the specifications of any product, (b) improve a product in any manner that STOBER deems necessary or appropriate and (c) discontinue the manufacture of any product.

5. **PURCHASE ORDERS.** The Customer will submit purchase orders for the products to STOBER in writing, whether by mail or telefax, which shall set forth, at a minimum: (a) an identification of the products ordered, (b) prices for such products, (c) quantities, (d) requested delivery dates and (e) shipping instructions and shipping addresses.

6. **ACCEPTANCE OF ORDERS.** All purchase orders received from the Customer are subject to acceptance by STOBER in writing.

7. **MODIFICATION OF ORDERS.** No accepted purchase order shall be modified or canceled except upon the written agreement of STOBER and the Customer. Mutually agreed cancellations shall be subject to reasonable charges based upon expenses already incurred by STOBER and commitments made by STOBER. Mutually agreed change orders shall be subject to all provisions of these Terms and Conditions of Sale.

8. **PRICE INCREASES.** STOBER may increase its prices for the products by providing the original purchaser of the products with at least thirty (30) days' prior written notice. Increased prices for products shall not apply to purchase orders accepted prior to the effective date of the price increase unless such orders provide for delivery more than thirty (30) days after the date of acceptance of the order.

9. **PRICING AND DELIVERY TERMS.** In accordance with KRS 355.2-319(1)(b), all products are delivered F.O.B. STOBER's warehouse facility in Maysville, Kentucky, or such other facility as STOBER may designate. Orders are then shipped per Customer's shipping instructions as set forth in Customer's purchase order. **CATALOG PRICING DOES NOT INCLUDE SHIPPING, HANDLING AND TAXES.** Once delivered to a common carrier of the Customer's choosing [or of STOBER's choosing if Customer has failed to specify a common carrier on or before five (5) days prior to the requested delivery date] STOBER shall have no further responsibility for the products and all risk of damage, loss or delay shall pass to the Customer. A handling fee is added to freight costs by STOBER to cover the cost of having to pay the carrier within seven (7) days when the terms with the Customer are net 30. The Customer has the option of shipping collect with our carrier or the carrier of choice.

10. **PAYMENT TERMS.** Net 30 days. All orders will be shipped either prepaid by the Customer or C.O.D., at STOBER's option, unless the Customer has established a previously approved credit line. If STOBER approves a credit line for the Customer, all payments shall be due within thirty (30) days of the date of the invoice. If any invoice is not paid in full within such thirty (30) day period, then finance charges shall be assessed at the rate of one and one-half percent ($1^1/_2$%) per month (eighteen percent (18%) per year). If such rate is deemed to be usurious at any time, it shall be reduced to the maximum rate permitted by applicable law. STOBER may stop or withhold shipment of products if the Customer does not fulfill its payment obligations. If STOBER is insecure about payment for any reason, STOBER may require full or partial payment in advance and as a condition to the continuation of its delivery of products.

11. **SECURITY INTEREST.** Unless and until the products are paid for in full, STOBER reserves a security interest in them to secure the unpaid balance of the purchase price. The Customer hereby grants to STOBER a power of attorney, coupled with an interest, to execute and file on behalf of the Customer all necessary financing statements and other documents required or appropriate to protect the security interest granted herein.

12. **ACCEPTANCE OF PRODUCTS.** The Customer will conduct any incoming inspection tests as soon as possible upon arrival of the products, but in no event later than ten (10) days after the date of receipt. Any products not rejected by written notice to STOBER within such period shall be deemed accepted by the Customer. STOBER shall not be liable for any additional costs, expenses or damages incurred by the Customer, directly or indirectly, as a result of any shortage, damage or discrepancy in a shipment.

13. **LIMITATION OF REMEDIES.**

(a) STOBER SHALL NOT BE LIABLE FOR ANY LOSS OR DAMAGE CAUSED BY DELAY IN FURNISHING THE CUSTOMER WITH PRODUCTS.

(b) IN NO EVENT SHALL STOBER'S LIABILITY INCLUDE ANY SPECIAL, INDIRECT, INCIDENTAL OR CONSEQUENTIAL LOSSES OR DAMAGES, EVEN IF STOBER HAS BEEN ADVISED OF THE POSSIBILITY OF SUCH POTENTIAL LOSS OR DAMAGE.

14. **MADE-TO-ORDER PRODUCTS.** STOBER reserves the right to revoke and amend any price quotations offered to the Customer for made-to-order products, provided that such price quotations have not been accepted by the Customer prior to the date of revocation or amendment.

15. **DIES, TOOLS AND EQUIPMENT.** Charges incurred by the Customer for dies, tools and other equipment shall not confer ownership or the right to possession therein by the Customer. All such dies, tools and equipment shall remain the property of STOBER, and STOBER shall have the exclusive right to possession thereof. STOBER shall maintain such tools and equipment in good working order.

16. **REGULATORY LAWS AND STANDARDS.** STOBER makes no representation that its products conform to state or local laws, ordinances, regulations, codes or standards except as may be otherwise agreed to in writing by STOBER.

17. **SIZES AND WEIGHTS.** STOBER's products are made only in the sizes and to the specifications set forth in its catalogs and other literature. If any alteration is requested, such altered product will be treated as a made-to-order item. STOBER assumes no responsibility for typographical errors which may appear in its catalogs or literature, and cannot accept alteration charges caused by such errors. Since weights shown in STOBER's catalogs are approximate, they cannot be used in determining freight allowances set forth in its catalogs and other literature. Freight allowances will be determined at the time of shipment and shall be based on actual shipping weight.

18. **SYSTEM DESIGN.** Responsibility for system design to ensure proper use and application of STOBER's products within their published specifications and ratings rests solely with the Customer. This includes, but is not limited to, an analysis of loads created by torsional vibrations within the entire system, regardless of how induced.

STOBER DRIVES INC.
1781 Downing Drive • Maysville, KY 41056
Phone: (606) 759-5090 • FAX: (606) 759-5045
www.stober.com • E-mail: sales@stober.com



ServoStop

Motor Adapter with Integrated Brake

Motor adapter integrated brake module provides redundant braking during power failures or emergency stops in hazardous situations. Available with Servo P, PA, PH, PHA, PK, PHK, C, F and K Series Gearheads.

- Saves braking at EMERGENCY STOP and power cut
- Prevents accidental sliding or falling of vertical axis with gravity load absolutely reliable
- Manual hand release available
- Fits all standard servo motors
- IP54 Rated; CSA Approved
- Higher safety for vertical applications per EN ISO 13849, Category 1, 2 & 3

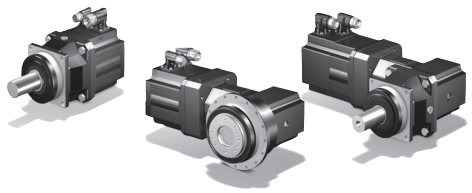

Servo Geared Motors

ED and EZ Series are compact, highly-dynamic, electronically commutated, permanent magnet brushless servo motors coupled to STOBER gearheads.

- Mounting the motor directly to the gearbox eliminates a motor coupling and housing, adapter or additional input seals and bearings to reduce inertia up to 75%
- Smoother running for optimal performance; dynamic, minimal torque/speed ripple; UL/CE/CSA approved
- Options include: washdown, food coatings, spring and magnetic brakes, forced air cooling, water cooling, high dynamic performance with low inertia, encoder options, PTC or KTY winding protection, high inertia option, motor speeds up to 6000 RPM, and high torque density



NEMA Compatible Speed Reducers

- Inline concentric, offset or right angle
- Helical, bevel or worm gear driven
- 1/6 to 165 HP
- Output torques to 106,296 in. lbs.
- Output speeds from 875 to 2.5 RPM
- Ratios from 2:1 to 683:1
- Food and corrosion resistant duty, stainless steel available

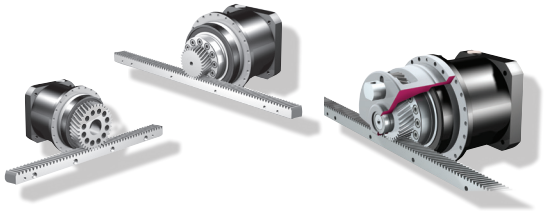

Rack and Pinion Systems

STOBER ZV, ZR, ZTR, ZTRS Series are high efficiency rack and pinion drives which feature an innovative pinion bearing for high linear force applications.

- Gear unit and rack optimally mated together as a system
- Ready to install drive solutions
- Easy selection and calculations done by STOBER for a total engineered solution
- Optimize inertia mismatch by changing the gear ratio or pinion tooth count
- Forces up to 122 kN or 27,400 lbs.
- Precision linear backlash as low as 7 µm
- Gearing size ranges from Mod. 2 – 10

Notes

Servo Gearboxes Version 33 Form #442934 06/24



STÖBER

SERVO GEARBOXES
1781 Downing Drive
Maysville, KY 41056
(800) 711-3588
e-mail: sales@stober.com
www.stober.com

STOBER | Servo Gearboxes | V.33